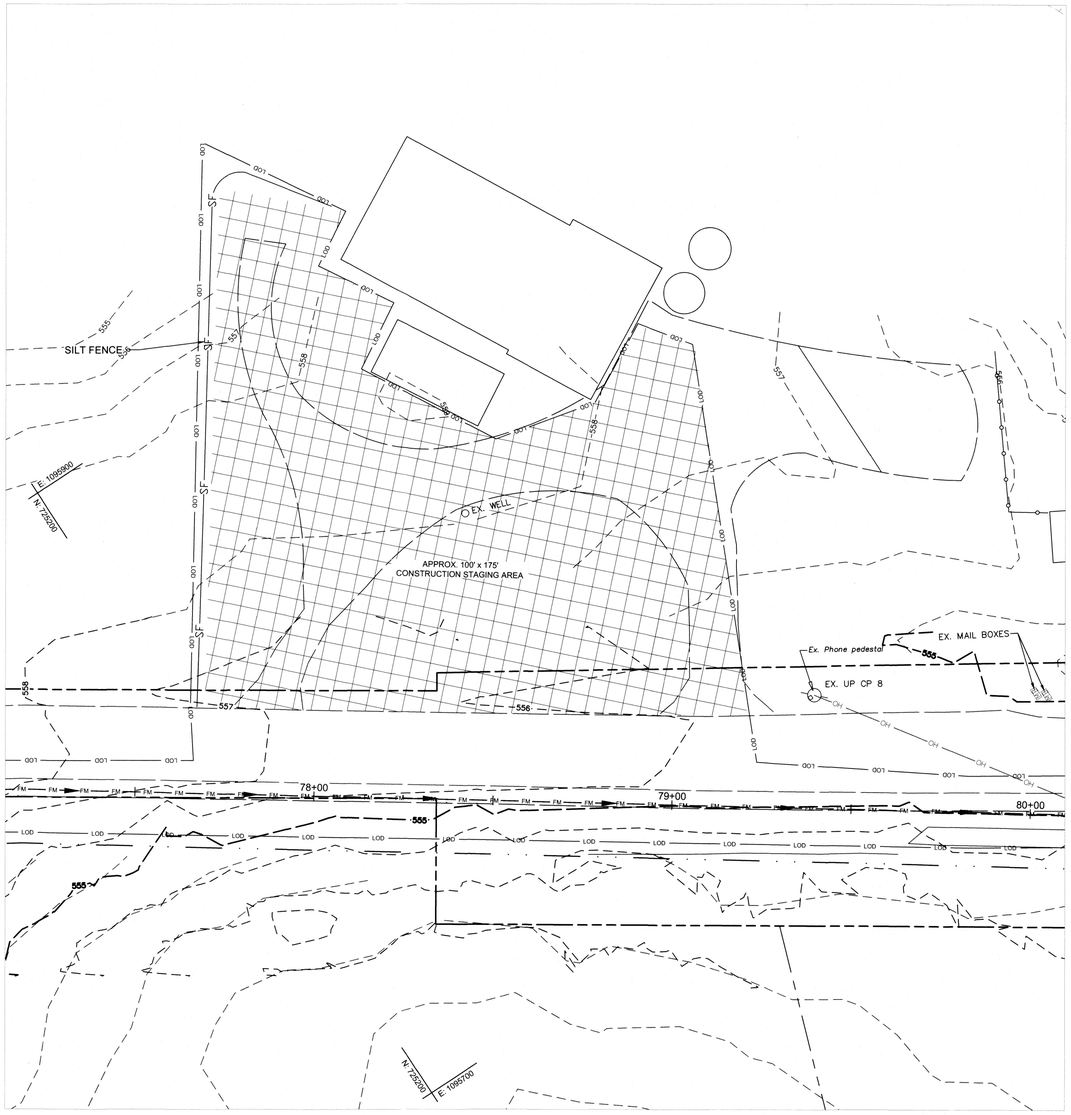


**INSET 1: CONSTRUCTION STAGING AREA AT McDADE ROAD**
SCALE: 1" = 20'

**INSET 2: CONSTRUCTION STAGING AREA AT SNOOK PROPERTY**
SCALE: 1" = 30'

0 5 10 20
GRAPHIC SCALE IN FEET

REVISIONS

| NO. | DATE | BY | DESCRIPTION |
|---|---|---|---|
| | | | |

DESIGN INFORMATION

| DESIGNED BY: | DRAWN BY: | CHECKED BY: | PROJECT MANAGER: |
|---|---|---|---|
| RCI/SMD | SMB/CAG/JRG | MP | RCI |

PROFESSIONAL CERTIFICATION. I HEREBY CERTIFY THAT THESE DOCUMENTS WERE PREPARED OR APPROVED BY ME, AND THAT I AM A DULY LICENSED PROFESSIONAL ENGINEER UNDER THE LAWS OF THE STATE OF MARYLAND, LICENSE NO. 15453 EXPIRATION DATE: 7/02/2023

SEAL

STATE OF MARYLAND · RICHARD II · CRAWFORD · 15453 · PROFESSIONAL ENGINEER

WASHINGTON COUNTY DEPARTMENT OF ENGINEERING SERVICES
16232 ELLIOTT PARKWAY
WILLIAMSPORT, MD 21795
WASHINGTON COUNTY, MARYLAND

E&S CONTROL PLAN IV


**EA Engineering, Science, and Technology, Inc., PBC**
Hunt Valley Center
225 Schilling Circle, Suite 400
Hunt Valley, Maryland 21031
(410) 584-7000


DATE: APRIL 2022

PROJECT NUMBER: 1556701

**C-138**

SHEET: 41 OF 76

SP-21-025 / SWCP-21-020


FILE PATH: \LOVETON\ACAD\APROJECTS\1556701 - WASHINGTON CO. FMC\ADPRODUCTION\ZDESIGN SET\1556701 - E&S DESIGN.DWG [C-138] PERRY, JEFF 4/29/2022 2:47 PM

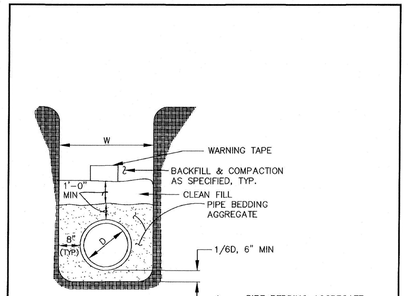


GRANULAR BEDDING & BACKFILL

* PIPE BEDDING AGGREGATE

D = 4" AND LARGER – SHA GRADED CRUSHER RUN CR-6

D = 1-1/2" THROUGH <4" – SHA GRADED B-10

D = LESS THAN 1-1/2" – STONE DUST

* = NOMINAL PIPE DIAMETER (INCHES)

NOTE:

1. FOR FORCEMAIN INSTALLATION WITH HDPE, TRENCH EXCAVATION MATERIAL OTHER THAN ROCK SHALL BE AN ACCEPTABLE TRENCH BACKFILL. TRENCH BACKFILL MATERIAL SHALL BE SUBJECT TO APPROVAL BY THE COUNTY.

| REVISED / REVISED / APPROVED | Washington County, MD Div.of Environmental Management<br>Approved: Julie A. Pippel<br>Director of Environmental Management | STANDARD TRENCH WIDTH & STONE BEDDING | Detail SW-1.1 |
|---|---|---|---|

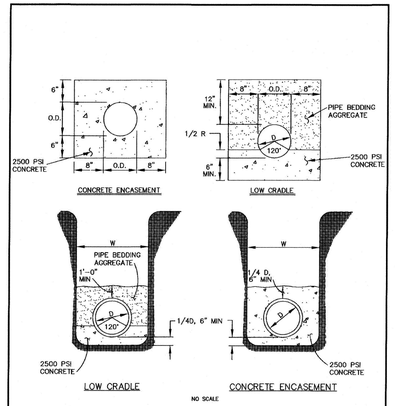


NO SCALE

| REVISED / REVISED / APPROVED | Washington County, MD Div.of Environmental Management<br>Approved: Julie A. Pippel<br>Director of Environmental Management | Concrete Cradles and Encasement | Detail SW-1.2 |
|---|---|---|---|

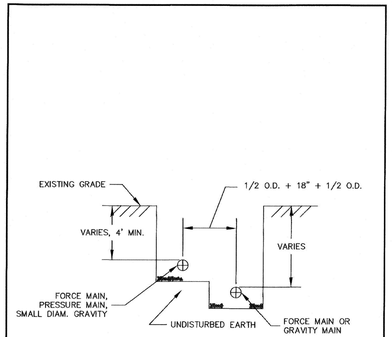


NO SCALE

| REVISED / REVISED / APPROVED | Washington County, MD Div.of Environmental Management<br>Approved: Julie A. Pippel<br>Director of Environmental Management | TRENCH DETAILS PARALLEL LINES | Detail SW-1.3 |
|---|---|---|---|

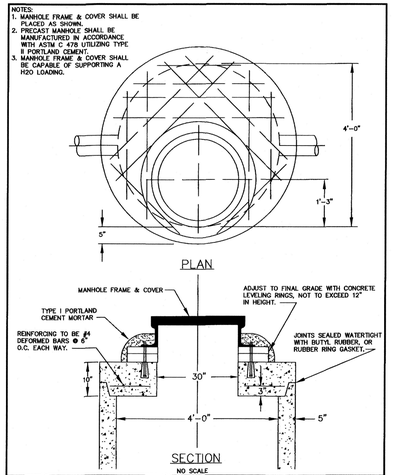


NO SCALE

| REVISED / REVISED / APPROVED | Washington County, MD Div.of Environmental Management<br>Approved: Julie A. Pippel<br>Director of Environmental Management | Flat Top Manhole Section Precast Manhole | Detail SW-2.2 |
|---|---|---|---|

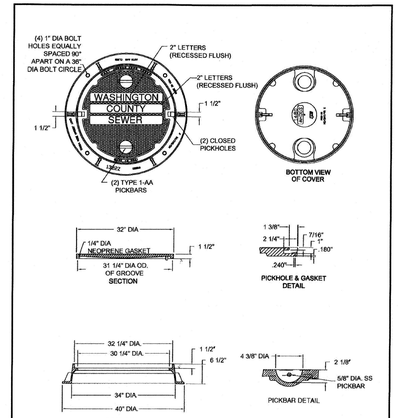


| REVISED / REVISED / APPROVED | Washington County, MD Div.of Environmental Management<br>Approved: Julie A. Pippel<br>Director of Environmental Management | Standard Manhole Frame & Cover | Detail SW-2.6 |
|---|---|---|---|




NO SCALE

| REVISED / REVISED / APPROVED | Washington County, MD Div.of Environmental Management<br>Approved: Julie A. Pippel<br>Director of Environmental Management | Standard Manhole Steps | Detail SW-2.9 |
|---|---|---|---|




NO SCALE

| REVISED / REVISED / APPROVED | Washington County, MD Div.of Environmental Management<br>Approved: Julie A. Pippel<br>Director of Environmental Management | Manhole Pipe Connections | Detail SW-2.10 |
|---|---|---|---|




| REVISED / REVISED / APPROVED | Washington County, MD Div.of Environmental Management<br>Approved: Julie A. Pippel<br>Director of Environmental Management | Valve & Box Installation | Detail SW-7.1 |
|---|---|---|---|




| NOMINAL DIAMETER | |
|---|---|
| MAIN | CASING |
| 4" | 10" |
| 6" | 14" |
| 8" | 16" |
| 10" | 18" |
| 12" | 20" |
| 15"/16" | 24" |
| 18" | 26" |

NOTES:
1. WELD JOINTS SHALL BE CONTINUOUS & WATERTIGHT. PIPE SHALL BE A139 GRADE 36.
2. WALL THICKNESS FOR ALL CASING SIZES SHALL BE STANDARD 0.375 INCH MIN.
3. ALL PIPES JOINTS INSIDE CASING PIPE SHALL BE RESTRAINED WITH MECHANICAL RESTRAINTS

NO SCALE

| REVISED / REVISED / APPROVED | Washington County, MD Div.of Environmental Management<br>Approved: Julie A. Pippel<br>Director of Environmental Management | Steel Pipe Encasement For Water & Sewer Mains | Detail SW-9.1 |
|---|---|---|---|

| NO. | DATE | BY | REVISIONS DESCRIPTION |
|---|---|---|---|

DESIGN INFORMATION
DESIGNED BY: RCI/SMD
DRAWN BY: SMB/CAG/JRG
CHECKED BY: SMD
PROJECT MANAGER: RCI

SEAL

PROFESSIONAL CERTIFICATION. I HEREBY CERTIFY THAT THESE DOCUMENTS WERE PREPARED OR APPROVED BY ME, AND THAT I AM A DULY LICENSED PROFESSIONAL ENGINEER UNDER THE LAWS OF THE STATE OF MARYLAND, LICENSE NO. 15453 EXPIRATION DATE: 7/02/2023

STATE OF MARYLAND — RICHARD C. INGRAM II — 15453 — PROFESSIONAL ENGINEER

WASHINGTON COUNTY DEPARTMENT OF ENGINEERING SERVICES
16232 ELLIOTT PARKWAY
WILLIAMSPORT, MD 21795
WASHINGTON COUNTY, MARYLAND

SEWER MAIN CONNECTION DETAILS I

EA Engineering, Science, and Technology, Inc., PBC
Hunt Valley Center
225 Schilling Circle, Suite 400
Hunt Valley, Maryland 21031
(410) 584-7000

DATE: APRIL 2022

PROJECT NUMBER: 1556701

**C-505**

SHEET: 42 OF 76

SP-21-025 / SWCP-21-020

FILE PATH: S:\OVETOK\CAD\PROJECTS\1556701 - WASHINGTON CO. FM\CAD\PRODUCTION\DESIGN SET\1556701 - DETAILS.DWG [C-505] PERRY, JEFF 4/29/2022 2:47 PM

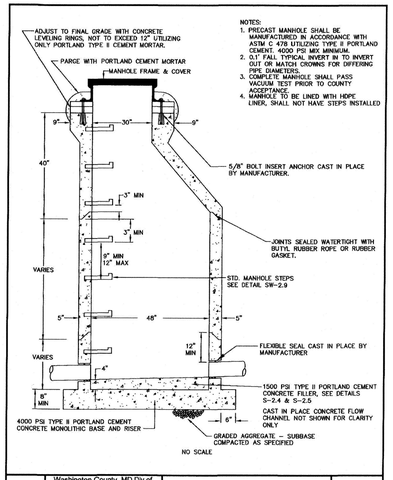


| REVISED / REVISED / APPROVED | Washington County, MD Div.of Environmental Management<br>Approved: Director of Environmental Management | Standard Through Manhole Precast Base | Detail S-2.1 |
|---|---|---|---|

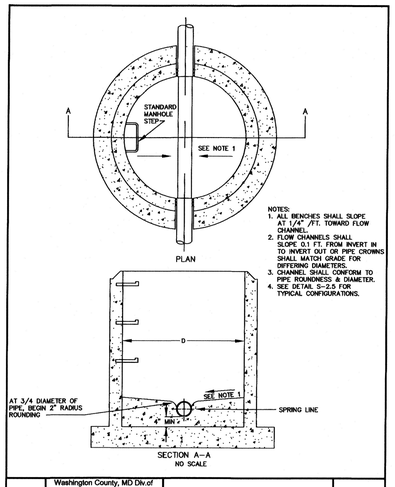


| REVISED / REVISED / APPROVED | Washington County, MD Div.of Environmental Management<br>Approved: Director of Environmental Management | Typical Bench and Flow Channel Section Precast Base | Detail S-2.4 |
|---|---|---|---|

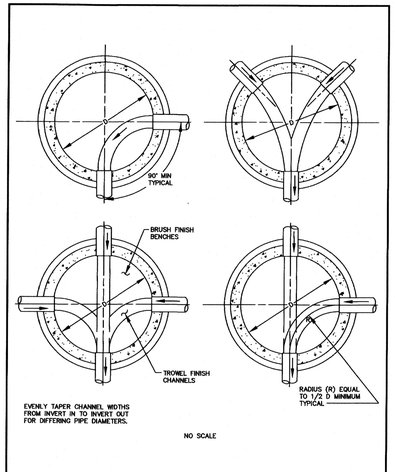


| REVISED / REVISED / APPROVED | Washington County, MD Div.of Environmental Management<br>Approved: Director of Environmental Management | Plans of Flow Channels (Typical) | Detail S-2.5 |
|---|---|---|---|

NOTE:

1. REQUIREMENT OF PRE-CAST DESIGN SIGNED AND SEALED BY MD PE WHERE DEPTH EXCEEDS 10 FT. SUBMITTAL FOR PROPOSED MANHOLE TO BE PROVIDED FOR ENGINEER REVIEW AND APPROVAL PRIOR TO INSTALLATION.

NOTE:

AT TRANSITION MANHOLE FROM FORCE MAIN TO GRAVITY, PROVIDE SMOOTH UPWARD SLOPING CHANNEL FROM FORCE MAIN TO GRAVITY SEWER .

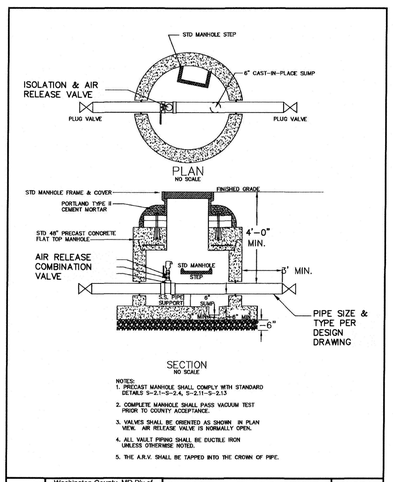


| REVISED / REVISED / APPROVED | Washington County, MD Div.of Environmental Management<br>Approved: Director of Environmental Management | Sewage Air Release Manhole Working Pressure Less Than or Equal To 100 PSI | Detail S-7.2A |
|---|---|---|---|

**NOTE:**

1. MANHOLE STRUCTURE SHALL BE ADEQUATE FOR TRAFFIC LOADING WHERE LOCATED WITHIN THE RIGHT OF WAY.

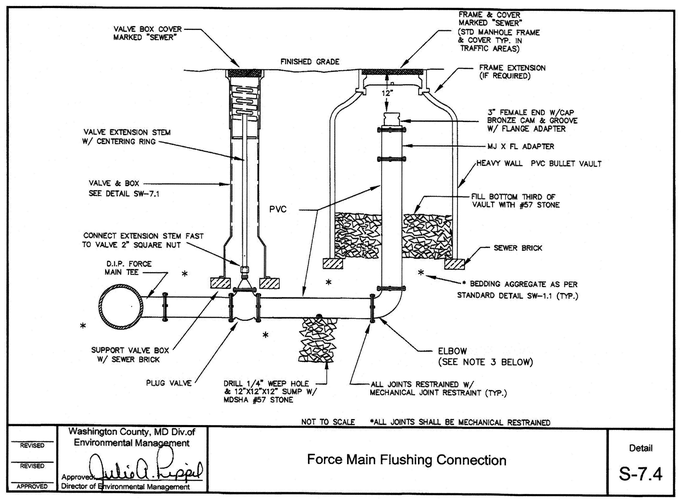


| REVISED / REVISED / APPROVED | Washington County, MD Div.of Environmental Management<br>Approved: Director of Environmental Management | Force Main Flushing Connection | Detail S-7.4 |
|---|---|---|---|

**NOTE:**

1. FLUSHING CONNECTION AND ASSOCIATED FITTINGS SHALL BE SIZE AS INDICATED ON CONTRACT DRAWINGS.
2. FLUSHING CONNECTION WITH LATERAL SHALL INCLUDE WYE TEE INSTALLED IN LIEU OF ELBOW SHOWN, WITH 5 FT LATERAL LENGTH INSTALLED AND CAPPED BEYOND BULLET VAULT.
3. INSTALL FITTINGS AS NECESSARY TO REDUCE LATERAL PIPE FOR USE WITH CAM AND GROOVE ADAPTER SIZED AS SHOWN THIS DETAIL.

REVISIONS

| NO. | DATE | BY | DESCRIPTION |
|---|---|---|---|

DESIGN INFORMATION
DESIGNED BY: RCI/SMD
DRAWN BY: SMB/CAG/JRG
CHECKED BY: SMD
PROJECT MANAGER: RCI

SEAL

PROFESSIONAL CERTIFICATION. I HEREBY CERTIFY THAT THESE DOCUMENTS WERE PREPARED OR APPROVED BY ME, AND THAT I AM A DULY LICENSED PROFESSIONAL ENGINEER UNDER THE LAWS OF THE STATE OF MARYLAND; LICENSE NO. 15453 EXPIRATION DATE: 7/02/2023

STATE OF MARYLAND · GEORGE T. ZHANG II · 15453 · PROFESSIONAL ENGINEER

WASHINGTON COUNTY DEPARTMENT OF ENGINEERING SERVICES
16232 ELLIOTT PARKWAY
WILLIAMSPORT, MD 21795
WASHINGTON COUNTY, MARYLAND

SEWER MAIN CONNECTION DETAILS II

EA Engineering, Science, and Technology, Inc., PBC
Hunt Valley Center
225 Schilling Circle, Suite 400
Hunt Valley, Maryland 21031
(410) 584-7000

DATE: APRIL 2022
PROJECT NUMBER: 1556701

C-506
SHEET: 43 OF 76

SP-21-025 / SWCP-21-020

FILE PATH: \\LOVETONQA\QA\PROJECTS\1556701 - WASHINGTON CO. FMC\ADP\PRODUCTION\DESIGN SET\1556701 - DETAILS.DWG [C-506] PERRY, JEFF 4/26/2022 2:47 PM

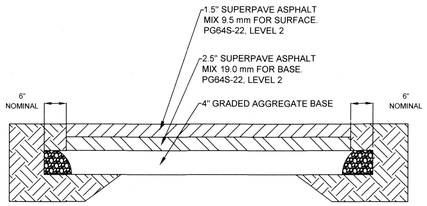


**MDSHA 508.08 - DRIVEWAY - FLEXIBLE PAVEMENT SECTION**

NOT TO SCALE

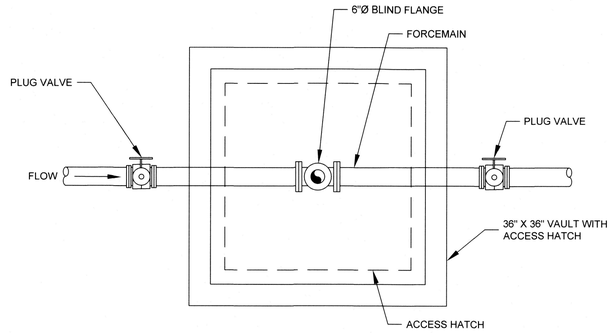


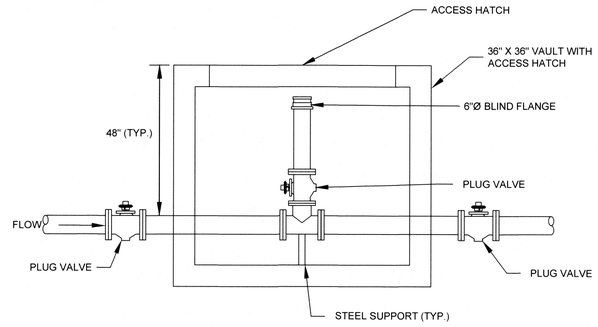


**BYPASS CONNECTION VAULT DETAIL**

NOT TO SCALE

**NOTE:**

1. ACCESS HATCH SHALL BE WATERTIGHT. VAULT TO BE INSTALLED FOR AT-GRADE ACCESS.
2. ACCESS HATCH SHALL BE BILCO TYPE J SINGLE LEAF DOOR, DEVELOPED IN ACCORDANCE WITH COUNTY REQUIREMENTS. HATCH SHALL BE SUBMITTED FOR COUNTY REVIEW AND APPROVAL PRIOR TO INSTALLATION.
3. VALVE BOXES TO BE UTILIZED FOR PLUG VALVE ACCESS AT GRADE. SEE COUNTY STANDARD DETAIL SW-7.1.

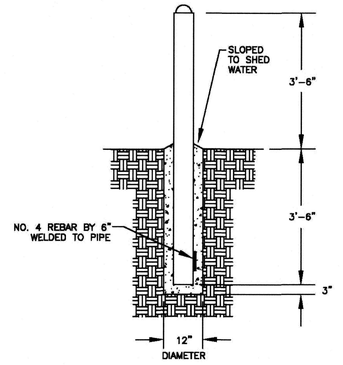


**BOLLARD IN GRASS / MULCH**

NOT TO SCALE

## NOTES

1. STEEL BOLLARDS SHALL BE 6" DIAMETER SCH 40 CASING PIPE FILLED WITH MD DEPT. OF TRANS. S.H.A. MIX NO. 2 CONCRETE WITH 5%–8% AIR ENTRAINMENT AND 2"–5" SLUMP. FINISH THE TOP OF THE CONCRETE SMOOTH AND DOME SHAPED.
2. APPLY (1) COAT OF PRIMER OVER NON-RUSTED, CLEAN METAL AND (2) COATS OF YELLOW OIL BASE EXTERIOR PAINT.
3. PLUMB AND CENTER THE CASING PIPE IN THE 12" HOLE. THE SIDES AND BOTTOM SHALL BE FIRM UNDISTURBED EARTH. NEATLY SAW CUT EXISTING PAVEMENT AND AUGER A NEAT CLEAN HOLE. IF PAVEMENT IS PROPOSED USE A SONOTUBE TYPE FORM.
4. PAVEMENT OR TURF RESTORATION SHALL BE INCIDENTAL TO THE BOLLARD INSTALLATION.

REVISIONS

| NO. | DATE | BY | DESCRIPTION |
|---|---|---|---|
| | | | |

DESIGN INFORMATION

DESIGNED BY: RCI/SMD
DRAWN BY: SMB/CAG/JRG
CHECKED BY: SMD
PROJECT MANAGER: RCI

PROFESSIONAL CERTIFICATION. I HEREBY CERTIFY THAT THESE DOCUMENTS WERE PREPARED OR APPROVED BY ME, AND THAT I AM A DULY LICENSED PROFESSIONAL ENGINEER UNDER THE LAWS OF THE STATE OF MARYLAND, LICENSE NO. 15453 EXPIRATION DATE: 7/02/2023

SEAL

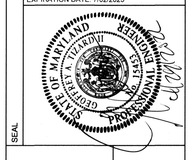


WASHINGTON COUNTY DEPARTMENT OF ENGINEERING SERVICES
16232 ELLIOTT PARKWAY
WILLIAMSPORT, MD 21795
WASHINGTON COUNTY, MARYLAND

SEWER MAIN CONNECTION DETAILS II

EA Engineering, Science, and Technology, Inc., PBC
Hunt Valley Center
225 Schilling Circle, Suite 400
Hunt Valley, Maryland 21031
(410) 584-7000

DATE: APRIL 2022

PROJECT NUMBER: 1556701

**C-507**

SHEET: 44 OF 76

SP-21-025 / SWCP-21-020

FILE PATH: \\JOVETONCADD\CADDPROJECTS\1556701 - WASHINGTON CO. FM\CADD\PRODUCTION\DESIGN SET\1556701 - DETAILS.DWG [C-507] PERRY, JEFF 4/26/2022 2:41 PM

B-4-2 STANDARDS AND SPECIFICATIONS FOR SOIL PREPARATION, TOPSOILING, AND SOIL AMENDMENTS

DEFINITION
THE PROCESS OF PREPARING THE SOILS TO SUSTAIN ADEQUATE VEGETATIVE STABILIZATION.

PURPOSE
TO PROVIDE A SUITABLE SOIL MEDIUM FOR VEGETATIVE GROWTH.

CONDITIONS WHERE PRACTICE APPLIES
WHERE VEGETATIVE STABILIZATION IS TO BE ESTABLISHED.

CRITERIA

A. SOIL PREPARATION
1. TEMPORARY STABILIZATION
   a. SEED PREPARATION CONSISTS OF LOOSENING SOIL TO A DEPTH OF 3 TO 5 INCHES BY MEANS OF SUITABLE AGRICULTURAL OR CONSTRUCTION EQUIPMENT, SUCH AS DISC HARROWS OR CHISEL PLOWS OR RIPPERS MOUNTED ON CONSTRUCTION EQUIPMENT. AFTER SOIL IS LOOSENED, IT MUST NOT BE ROLLED OR DRAGGED SMOOTH BUT LEFT IN ROUGHENED CONDITION. SLOPES 3:1 OR FLATTER ARE TO BE TRACKED WITH RIDGES RUNNING PARALLEL TO THE CONTOUR OF THE SLOPE.
   b. APPLY FERTILIZER AND LIME AS PRESCRIBED ON THE PLANS.
   c. INCORPORATE LIME AND FERTILIZER INTO THE TOP 3 TO 5 INCHES OF SOIL BY DISKING OR OTHER SUITABLE MEANS.
2. PERMANENT STABILIZATION
   a. A SOIL TEST IS REQUIRED FOR ANY EARTH DISTURBANCE OF 5 ACRES OR MORE. THE MINIMUM SOIL CONDITIONS REQUIRED FOR PERMANENT VEGETATIVE ESTABLISHMENT ARE:
      i. SOIL PH BETWEEN 6.0 TO 7.0.
      ii. SOLUBLE SALTS LESS THAN 500 PARTS PER MILLION (PPM).
      iii. SOIL CONTAINS LESS THAN 40 PERCENT CLAY BUT ENOUGH FINE GRAINED MATERIAL (GREATER THAN 30 PERCENT SILT PLUS CLAY) TO PROVIDE THE CAPACITY TO HOLD A MODERATE AMOUNT OF MOISTURE. AN EXCEPTION: IF LOVEGRASS WILL BE PLANTED, THEN A SANDY SOIL (LESS THAN 30 PERCENT SILT PLUS CLAY) WOULD BE ACCEPTABLE
      iv. SOIL CONTAINS 1.5 PERCENT MINIMUM ORGANIC MATTER BY WEIGHT.
      v. SOIL CONTAINS SUFFICIENT PORE SPACE TO PERMIT ADEQUATE ROOT PENETRATION.
   b. APPLICATION OF AMENDMENTS OR TOPSOIL IS REQUIRED IF ON-SITE SOILS DO NOT MEET THE ABOVE CONDITIONS.
   c. GRADED AREAS MUST BE MAINTAINED IN A TRUE AND EVEN GRADE AS SPECIFIED ON THE APPROVED PLAN, THEN SCARIFIED OR OTHERWISE LOOSENED TO A DEPTH OF 3 TO 5 INCHES.
   d. APPLY SOIL AMENDMENTS AS SPECIFIED ON THE APPROVED PLAN OR AS INDICATED BY THE RESULTS OF A SOIL TEST.
   e. MIX SOIL AMENDMENTS INTO THE TOP 3 TO 5 INCHES OF SOIL BY DISKING OR OTHER SUITABLE MEANS. RAKE LAWN AREAS TO SMOOTH THE SURFACE, REMOVE LARGE OBJECTS LIKE STONES AND BRANCHES, AND READY THE AREA FOR SEED APPLICATION. LOOSEN SURFACE SOIL BY DRAGGING WITH A HEAVY CHAIN OR OTHER EQUIPMENT TO ROUGHEN THE SURFACE WHERE SITE CONDITIONS WILL NOT PERMIT NORMAL SEEDBED PREPARATION. TRACK SLOPES 3:1 OR FLATTER WITH TRACKED EQUIPMENT LEAVING THE SOIL IN AN IRREGULAR CONDITION WITH RIDGES RUNNING PARALLEL TO THE CONTOUR OF THE SLOPE. LEAVE THE TOP 1 TO 3 INCHES OF SOIL LOOSE AND FRIABLE. SEEDBED LOOSENING MAY BE UNNECESSARY ON NEWLY DISTURBED AREAS.

B. TOPSOILING
1. TOPSOIL IS PLACED OVER PREPARED SUBSOIL PRIOR TO ESTABLISHMENT OF PERMANENT VEGETATION. THE PURPOSE IS TO PROVIDE A SUITABLE SOIL MEDIUM FOR VEGETATIVE GROWTH. SOILS OF CONCERN HAVE LOW MOISTURE CONTENT, LOW NUTRIENT LEVELS, LOW PH, MATERIALS TOXIC TO PLANTS, AND/OR UNACCEPTABLE SOIL GRADATION.
2. TOPSOIL SALVAGED FROM AN EXISTING SITE MAY BE USED PROVIDED IT MEETS THE STANDARDS AS SET FORTH IN THESE SPECIFICATIONS. TYPICALLY, THE DEPTH OF TOPSOIL TO BE SALVAGED FOR A GIVEN SOIL TYPE CAN BE FOUND IN THE REPRESENTATIVE SOIL PROFILE SECTION IN THE SOIL SURVEY PUBLISHED BY USDA-NRCS.
3. TOPSOILING IS LIMITED TO AREAS HAVING 2:1 OR FLATTER SLOPES WHERE:
   a. THE TEXTURE OF THE EXPOSED SUBSOIL/PARENT MATERIAL IS NOT ADEQUATE TO PRODUCE VEGETATIVE GROWTH.
   b. THE SOIL MATERIAL IS SO SHALLOW THAT THE ROOTING ZONE IS NOT DEEP ENOUGH TO SUPPORT PLANTS OR FURNISH CONTINUING SUPPLIES OF MOISTURE AND PLANT MATERIAL.
   c. THE ORIGINAL SOIL TO BE VEGETATED CONTAINS MATERIAL TOXIC TO PLANT GROWTH.
   d. THE SOIL IS SO ACIDIC THAT TREATMENT WITH LIMESTONE IS NOT FEASIBLE.
4. AREAS HAVING SLOPES STEEPER THAN 2:1 REQUIRE SPECIAL CONSIDERATION AND DESIGN.
5. TOPSOIL SPECIFICATIONS: SOIL TO BE USED AS TOPSOIL MUST MEET THE FOLLOWING CRITERIA:
   a. TOPSOIL MUST BE A LOAM, SANDY LOAM, CLAY LOAM, SILT LOAM, SANDY CLAY LOAM, OR LOAMY SAND. OTHER SOILS MAY BE USED IF RECOMMENDED BY AN AGRONOMIST OR SOIL SCIENTIST AND APPROVED BY THE APPROPRIATE APPROVAL AUTHORITY. TOPSOIL MUST NOT BE A MIXTURE OF CONTRASTING TEXTURED SUBSOILS AND MUST CONTAIN LESS THAN 5 PERCENT BY VOLUME OF CINDERS, STONES, SLAG, COARSE FRAGMENTS, GRAVEL, STICKS, ROOTS, TRASH, OR OTHER MATERIALS LARGER THAN 1½ INCH DIAMETER.
   b. TOPSOIL MUST BE FREE OF NOXIOUS PLANTS OR PLANT PARTS SUCH AS BERMUDA GRASS, QUACK GRASS, JOHNSON GRASS, NUT SEDGE, POISON IVY, THISTLE, OR OTHERS AS SPECIFIED.
   c. TOPSOIL SUBSTITUTES OR AMENDMENTS, AS RECOMMENDED BY A QUALIFIED AGRONOMIST OR SOIL SCIENTIST AND APPROVED BY THE APPROPRIATE APPROVAL AUTHORITY, MAY BE USED IN LIEU OF NATURAL TOPSOIL.
6. TOPSOIL APPLICATION
   a. EROSION AND SEDIMENT CONTROL PRACTICES MUST BE MAINTAINED WHEN APPLYING TOPSOIL.
   b. UNIFORMLY DISTRIBUTE TOPSOIL IN A 5 TO 8 INCH LAYER AND LIGHTLY COMPACT TO A MINIMUM THICKNESS OF 4 INCHES. SPREADING IS TO BE PERFORMED IN SUCH A MANNER THAT SODDING OR SEEDING CAN PROCEED WITH A MINIMUM OF ADDITIONAL SOIL PREPARATION AND TILLAGE. ANY IRREGULARITIES IN THE SURFACE RESULTING FROM TOPSOILING OR OTHER OPERATIONS MUST BE CORRECTED IN ORDER TO PREVENT THE FORMATION OF DEPRESSIONS OR WATER POCKETS.
   c. TOPSOIL MUST NOT BE PLACED IF THE TOPSOIL OR SUBSOIL IS IN A FROZEN OR MUDDY CONDITION, WHEN THE SUBSOIL IS EXCESSIVELY WET OR IN A CONDITION THAT MAY OTHERWISE BE DETRIMENTAL TO PROPER GRADING AND SEEDBED PREPARATION.

C. SOIL AMENDMENTS (FERTILIZER AND LIME SPECIFICATIONS)
1. SOIL TESTS MUST BE PERFORMED TO DETERMINE THE EXACT RATIOS AND APPLICATION RATES FOR BOTH LIME AND FERTILIZER ON SITES HAVING DISTURBED AREAS OF 5 ACRES OR MORE. SOIL ANALYSIS MAY BE PERFORMED BY A RECOGNIZED PRIVATE OR COMMERCIAL LABORATORY. SOIL SAMPLES TAKEN FOR ENGINEERING PURPOSES MAY ALSO BE USED FOR CHEMICAL ANALYSES.
2. FERTILIZERS MUST BE UNIFORM IN COMPOSITION, FREE FLOWING AND SUITABLE FOR ACCURATE APPLICATION BY APPROPRIATE EQUIPMENT. MANURE MAY BE SUBSTITUTED FOR FERTILIZER WITH PRIOR APPROVAL FROM THE APPROPRIATE APPROVAL AUTHORITY. FERTILIZERS MUST ALL BE DELIVERED TO THE SITE FULLY LABELED ACCORDING TO THE APPLICABLE LAWS AND MUST BEAR THE NAME, TRADE NAME OR TRADEMARK AND WARRANTY OF THE PRODUCER.
3. LIME MATERIALS MUST BE GROUND LIMESTONE (HYDRATED OR BURNT LIME MAY BE SUBSTITUTED EXCEPT WHEN HYDROSEEDING) WHICH CONTAINS AT LEAST 50 PERCENT TOTAL OXIDES (CALCIUM OXIDE PLUS MAGNESIUM OXIDE). LIMESTONE MUST BE GROUND TO SUCH FINENESS THAT AT LEAST 50 PERCENT WILL PASS THROUGH A #100 MESH SIEVE AND 98 TO 100 PERCENT WILL PASS THROUGH A #20 MESH SIEVE.
4. LIME AND FERTILIZER ARE TO BE EVENLY DISTRIBUTED AND INCORPORATED INTO THE TOP 3 TO 5 INCHES OF SOIL BY DISKING OR OTHER SUITABLE MEANS.
5. WHERE THE SUBSOIL IS EITHER HIGHLY ACIDIC OR COMPOSED OF HEAVY CLAYS, SPREAD GROUND LIMESTONE AT THE RATE OF 4 TO 8 TONS/ACRE (200-400 POUNDS PER 1,000 SQUARE FEET) PRIOR TO THE PLACEMENT OF TOPSOIL.

B-4-3 STANDARDS AND SPECIFICATIONS FOR SEEDING AND MULCHING

DEFINITION
THE APPLICATION OF SEED AND MULCH TO ESTABLISH VEGETATIVE COVER.

PURPOSE
TO PROTECT DISTURBED SOILS FROM EROSION DURING AND AT THE END OF CONSTRUCTION.

CONDITIONS WHERE PRACTICE APPLIES
TO THE SURFACE OF ALL PERIMETER CONTROLS, SLOPES, AND ANY DISTURBED AREA NOT UNDER ACTIVE GRADING.

CRITERIA

A. SEEDING
1. SPECIFICATIONS
   a. ALL SEED MUST MEET THE REQUIREMENT OF THE MARYLAND STATE SEED LAW. ALL SEED MUST BE SUBJECT TO RE-TESTING BY A RECOGNIZED SEED LABORATORY. ALL SEED USED MUST HAVE BEEN TESTED WITHIN THE 6 MONTHS IMMEDIATELY PRECEDING THE DATE OF SOWING SUCH MATERIAL ON ANY PROJECT. REFER TO TABLE B.4 REGARDING THE QUALITY OF SEED. SEED TAGS MUST BE AVAILABLE UPON REQUEST TO THE INSPECTOR TO VERIFY TYPE OF SEED AND SEEDING RATE.
   b. MULCH ALONE MAY BE APPLIED BETWEEN THE FALL AND SPRING SEEDING DATES ONLY IF THE GROUND IS FROZEN. THE APPROPRIATE SEEDING MIXTURE MUST BE APPLIED WHEN THE GROUND THAWS.
   c. INOCULANTS: THE INOCULANT FOR TREATING LEGUME SEED IN THE SEED MIXTURES MUST BE A PURE CULTURE OF NITROGEN FIXING BACTERIA PREPARED SPECIFICALLY FOR THE SPECIES. INOCULANTS MUST NOT BE USED LATER THAN THE DATE INDICATED ON THE CONTAINER. ADD FRESH INOCULANTS AS DIRECTED ON THE PACKAGE. USE FOUR TIMES THE RECOMMENDED RATE WHEN HYDROSEEDING. NOTE: IT IS VERY IMPORTANT TO KEEP INOCULANT AS COOL AS POSSIBLE UNTIL USED. TEMPERATURES ABOVE 75 TO 80 DEGREES FAHRENHEIT CAN WEAKEN BACTERIA AND MAKE THE INOCULANT LESS EFFECTIVE.
   d. SOD AND SEED MUST NOT BE PLACED ON SOIL WHICH HAS BEEN TREATED WITH SOIL STERILANTS OR CHEMICALS USED FOR WEED CONTROL UNTIL SUFFICIENT TIME HAS ELAPSED (14 DAYS MIN.) TO PERMIT DISSIPATION OF PHYTO-TOXIC MATERIALS.
2. APPLICATION
   a. DRY SEEDING: THIS INCLUDES USE OF CONVENTIONAL DROP OR BROADCAST SPREADERS.
      i. INCORPORATE SEED INTO THE SUBSOIL AT THE RATES PRESCRIBED ON TEMPORARY SEEDING TABLE B.1, PERMANENT SEEDING TABLE B.3, OR SITE-SPECIFIC SEEDING SUMMARIES.
      ii. APPLY SEED IN TWO DIRECTIONS, PERPENDICULAR TO EACH OTHER. APPLY HALF THE SEEDING RATE IN EACH DIRECTION. ROLL THE SEEDED AREA WITH A WEIGHTED ROLLER TO PROVIDE GOOD SEED TO SOIL CONTACT.
   b. DRILL OR CULTIPACKER SEEDING: MECHANIZED SEEDERS THAT APPLY AND COVER SEED WITH SOIL.
      i. CULTIPACKING SEEDERS ARE REQUIRED TO BURY THE SEED IN SUCH A FASHION AS TO PROVIDE AT LEAST ¼ INCH OF SOIL COVERING. SEEDBED MUST BE FIRM AFTER PLANTING.
      ii. APPLY SEED IN TWO DIRECTIONS, PERPENDICULAR TO EACH OTHER. APPLY HALF THE SEEDING RATE IN EACH DIRECTION.
   c. HYDROSEEDING: APPLY SEED UNIFORMLY WITH HYDROSEEDER (SLURRY INCLUDES SEED AND FERTILIZER).
      i. IF FERTILIZER IS BEING APPLIED AT THE TIME OF SEEDING, THE APPLICATION RATES SHOULD BE EXCEED THE FOLLOWING: NITROGEN, 100 POUNDS PER ACRE TOTAL SOLUBLE NITROGEN; $P_2O_5$ (PHOSPHOROUS); 200 POUNDS PER ACRE; $K_2O$ (POTASSIUM), 200 POUNDS PER ACRE.
      ii. LIME: USE ONLY GROUND AGRICULTURAL LIMESTONE (UP TO 3 TONS PER ACRE MAY BE APPLIED BY HYDROSEEDING). NORMALLY, NOT MORE THAN 2 TONS ARE APPLIED BY HYDROSEEDING AT ANY ONE TIME. DO NOT USE BURNT OR HYDRATED LIME WHEN HYDROSEEDING.
      iii. MIX SEED AND FERTILIZER ON SITE AND SEED IMMEDIATELY AND WITHOUT INTERRUPTION.
      iv. WHEN HYDROSEEDING, DO NOT INCORPORATE INTO THE SOIL.

B. MULCHING
1. MULCH MATERIALS (IN ORDER OF PREFERENCE)
   a. STRAW CONSISTING OF THOROUGHLY THRESHED WHEAT, RYE, OAT, OR BARLEY AND REASONABLE BRIGHT IN COLOR. STRAW IS TO BE FREE OF WEED SEED SEEDS AS SPECIFIED IN THE MARYLAND SEE LAW AND NOT MUSTY, MOLDY, CAKED, DECAYED, OR EXCESSIVELY DUSTY. NOTE: USE ONLY STERILE STRAW MULCH IN AREAS WHERE ONE SPECIES OF GRASS IS DESIRED.
   b. WOOD CELLULOSE FIBER MULCH (WCFM) CONSISTING OF SPECIALLY PREPARED WOOD CELLULOSE PROCESSED INTO A UNIFORM FIBROUS PHYSICAL STATE.
      i. WCFM IS TO BE DYED GREEN OR CONTAIN A GREEN DYE IN THE PACKAGE THAT WILL PROVIDE AN APPROPRIATE COLOR TO FACILITATE VISUAL INSPECTION OF THE UNIFORMLY SPREAD SLURRY.
      ii. WCFM, INCLUDING DYE, MUST CONTAIN NO GERMINATION OR GROWTH INHIBITING FACTORS.
      iii. WCFM MATERIALS ARE TO BE MANUFACTURED AND PROCESSED IN SUCH A MANNER THAT THE WOOD CELLULOSE FIBER MULCH WILL REMAIN IN UNIFORM SUSPENSION IN WATER UNDER AGITATION AND WILL BLEND WITH SEED, FERTILIZER AND OTHER ADDITIVES TO FORM A HOMOGENOUS SLURRY. THE MULCH MATERIAL MUST FORM A BLOTTER-LIKE GROUND COVER, ON APPLICATION, HAVING MOISTURE ABSORPTION AND PERCOLATION PROPERTIES AND MUST COVER AND HOLD GRASS SEED IN CONTACT WITH THE SOIL WITHOUT INHIBITING THE GROWTH OF THE GRASS SEEDLINGS.
      iv. WCFM MATERIAL MUST NOT CONTAIN ELEMENTS OR COMPOUNDS AT CONCENTRATION LEVELS THAT WILL BY PHYTO-TOXIC.
      v. WCFM MUST CONFORM TO THE FOLLOWING PHYSICAL REQUIREMENTS: FIBER LENGTH OF APPROXIMATELY 10 MILLIMETERS, DIAMETER APPROXIMATELY 1 MILLIMETER, PH RANGE OF 4.0 TO 8.5, ASH CONTENT OF 1.6 PERCENT MAXIMUM AND WATER HOLDING CAPACITY OF 90 PERCENT MINIMUM.
2. APPLICATION
   a. APPLY MULCH TO ALL SEEDED AREAS IMMEDIATELY AFTER SEEDING.
   b. WHEN STRAW MULCH IS USED, SPREAD IT OVER ALL SEEDED AREAS AT THE RATE OF 2 TONS PER ACRE TO A UNIFORM LOOSE DEPTH OF 1 TO 2 INCHES. APPLY MULCH TO ACHIEVE A UNIFORM DISTRIBUTION AND DEPTH SO THAT THE SOIL SURFACE IS NOT EXPOSED. WHEN USING A MULCH ANCHORING TOOL, INCREASE THE APPLICATION RATE TO 2.5 TONS PER ACRE.
   c. WOOD CELLULOSE FIBER USED AS MULCH MUST BE APPLIED AT A NET DRY WEIGHT OF 100 POUNDS PER ACRE. MIX THE WOOD CELLULOSE FIBER WITH WATER TO ATTAIN A MIXTURE WITH A MAXIMUM OF 50 POUNDS OF WOOD CELLULOSE FIBER PER 100 GALLONS OF WATER.
3. ANCHORING
   a. PERFORM MULCH ANCHORING IMMEDIATELY FOLLOWING APPLICATION OF MULCH TO MINIMIZE LOSS BY WIND OR WATER. THIS MAY BE DONE BY ONE OF THE FOLLOWING METHODS (LISTED BY PREFERENCE), DEPENDING UPON THE SIZE OF THE AREA AND EROSION HAZARD:
      i. A MULCH ANCHORING TOOL IS A TRACTOR DRAWN IMPLEMENT DESIGNED TO PUNCH AND ANCHOR MULCH INTO THE SOIL SURFACE A MINIMUM OF 2 INCHES. THIS PRACTICE IS MOST EFFECTIVE ON LARGE AREAS, BUT IS LIMITED TO FLATTER SLOPES WHERE EQUIPMENT CAN OPERATE SAFELY. IF USED ON SLOPING LAND, THIS PRACTICE SHOULD FOLLOW THE CONTOUR.
      ii. WOOD CELLULOSE FIBER MAY BE USED FOR ANCHORING STRAW. APPLY THE FIBER BINDER AT A NET DRY WEIGHT OF 750 POUNDS PER ACRE. MIX THE WOOD CELLULOSE FIBER WITH WATER AT A MAXIMUM OF 50 POUNDS OF WOOD CELLULOSE FIBER PER 100 GALLONS OF WATER.
      iii. SYNTHETIC BINDERS SUCH AS ACRYLIC DLR (AGRO-TACK), DCA-70, PETROSET, TERRA TAX II, TERRA TACK AR OR OTHER APPROVED EQUAL MAY BE USED. FOLLOW APPLICATION RATES AS SPECIFIED BY THE MANUFACTURER. APPLICATION OF LIQUID BINDERS NEEDS TO BE HEAVIER AT THE EDGES WHERE WIND CATCHES MULCH, SUCH AS IN VALLEYS AND ON CRESTS OF BANKS. USE OF ASPHALT BINDERS IS STRICTLY PROHIBITED.
      iv. LIGHTWEIGHT PLASTIC NETTING MAY BE STAPLED OVER THE MULCH ACCORDING TO MANUFACTURER RECOMMENDATIONS. NETTING IS USUALLY AVAILABLE IN ROLLS 4 TO 15 FEET WIDE AND 300 TO 3,000 FEET LONG.

B-4-4 STANDARDS AND SPECIFICATIONS FOR TEMPORARY STABILIZATION

DEFINITION
TO STABILIZE DISTURBED SOILS WITH VEGETATION FOR UP TO 6 MONTHS.

PURPOSE
TO USE FAST GROWING VEGETATION THAT PROVIDES COVER ON DISTURBED SOILS.

CONDITIONS WHERE PRACTICE APPLIES
EXPOSED SOILS WHERE GROUND COVER IS NEEDED FOR A PERIOD OF 6 MONTHS OR LESS. FOR LONGER DURATION OF TIME, PERMANENT STABILIZATION PRACTICES ARE REQUIRED.

CRITERIA

1. SELECT ONE OR MORE OF THE SPECIES OR SEED MIXTURES LISTED IN TABLE B.1 FOR THE APPROPRIATE PLANT HARDINESS ZONE (FROM FIGURE B.3), AND ENTER THEM IN THE TEMPORARY SEEDING SUMMARY BELOW ALONG WITH APPLICATION RATES, SEEDING DATES AND SEEDING DEPTHS. IF THE SUMMARY IS NOT PUT ON THE PLAN AND COMPLETED, THEN TABLE B.1 PLUS FERTILIZER AND LIME RATES MUST BE PUT ON THE PLAN.
2. FOR SITES HAVING SOIL TESTS PERFORMED, USE AND SHOW THE RECOMMENDED RATES BY THE TESTING AGENCY. SOILS TESTS ARE NOT REQUIRED FOR TEMPORARY SEEDING.
3. WHEN STABILIZATION IS REQUIRED OUTSIDE OF A SEEDING SEASON, APPLY SEED AND MULCH OR STRAW MULCH ALONG AS PRESCRIBED IN SECTION B-4-3.A.1.1B AND MAINTAIN UNTIL THE NEXT SEEDING SEASON.

| HARDINESS ZONE: 5b/6a<br>SEED MIXTURE: NA | | | | | FERTILIZER RATE (10-20-20) | LIME RATE |
|---|---|---|---|---|---|---|
| NO. | SPECIES | APPLICATION RATE(LB/AC) | SEEDING DATES | SEEDING DEPTHS | | |
| NA | BARLEY (Hordeum vulgare) | 96 lb/ac.<br>2.2 lb/1000 s.f. | MARCH 15-MAY 31<br>AUGUST 1-SEPT. 30 | | 436 LB/AC (10 LB/ 1000SF) | 2 TONS/AC (90 LB/ 1000SF) |

B-4-5 STANDARDS AND SPECIFICATIONS FOR PERMANENT STABILIZATION

DEFINITION
TO STABILIZE DISTURBED SOILS WITH PERMANENT VEGETATION.

PURPOSE
TO USE LONG-LIVED PERENNIAL GRASSES AND LEGUMES TO ESTABLISH PERMANENT COVER ON DISTURBED SOILS.

CONDITIONS WHERE PRACTICE APPLIES
EXPOSED SOILS WHERE GROUND COVER IS NEEDED FOR 6 MONTHS OR MORE..

CRITERIA

A. SEED MIXTURES

1. GENERAL USE
   a. SELECT ONE OR MORE OF THE SPECIES OR MIXTURES LISTED IN TABLE B.3 FOR THE APPROPRIATE PLANT HARDINESS ZONE (FROM FIGURE B.3) AND BASED ON THE SITE CONDITION OR PURPOSE FOUND ON TABLE B.2. ENTER SELECTED MIXTURE(S), APPLICATION RATES, AND SEEDING DATES IN THE PERMANENT SEEDING SUMMARY. THE SUMMARY IS TO BE PLACED ON THE PLAN.
   b. ADDITIONAL PLANTING SPECIFICATIONS FOR EXCEPTIONAL SITES SUCH AS SHORELINES, STREAM BANKS, OR DUNES OR FOR SPECIAL PURPOSES SUCH AS WILDLIFE OR AESTHETIC TREATMENT MAY BE FOUND IN USDA-NRCS TECHNICAL FIELD OFFICE GUIDE, SECTION 342 - CRITICAL AREA PLANTING.
   c. FOR SITES HAVING DISTURBED AREA OVER 5 ACRES, USE AND SHOW THE RATES RECOMMENDED BY THE SOIL TESTING AGENCY.
   d. FOR AREAS RECEIVING LOW MAINTENANCE, APPLY UREA FORM FERTILIZER (46-0-0) AT 3½ POUNDS PER 1000 SQUARE FEET (150 POUNDS PER ACRE) AT THE TIME OF SEEDING IN ADDITION TO THE SOIL AMENDMENTS SHOWN IN THE PERMANENT SEEDING SUMMARY.

2. TURFGRASS MIXTURES
   a. AREAS WHERE TURFGRASS MAY BE DESIRED INCLUDE LAWNS, PARKS, PLAYGROUNDS, AND COMMERCIAL SITES WHICH WILL RECEIVE A MEDIUM TO HIGH LEVEL OF MAINTENANCE.
   b. SELECT ONE OR MORE OF THE SPECIES OR MIXTURES LISTED BELOW BASED ON THE SITE CONDITIONS OR PURPOSE. ENTER SELECTED MIXTURE(S), APPLICATION RATES, AND SEEDING DATES IN THE PERMANENT SEEDING SUMMARY. THE SUMMARY IS TO BE PLACED ON THE PLAN:
      i. KENTUCKY BLUEGRASS: FULL SUN MIXTURE: FOR USE IN AREAS THAT RECEIVE INTENSIVE MANAGEMENT. IRRIGATION REQUIRED IN THE AREAS OF CENTRAL MARYLAND AND EASTERN SHORE. RECOMMENDED CERTIFIED KENTUCKY BLUEGRASS CULTIVARS SEEDING RATE: 1.5 TO 2.0 POUNDS PER 1000 SQUARE FEET. CHOOSE A MINIMUM OF THREE KENTUCKY BLUEGRASS CULTIVARS WITH EACH RANGING FROM 10 TO 35 PERCENT OF TOTAL MIXTURE BY WEIGHT.
      ii. KENTUCKY BLUEGRASS/PERENNIAL RYE: FULL SUN MIXTURE: FOR USE IN FULL SUN AREAS WHERE RAPID ESTABLISHMENT IS NECESSARY AND WHEN TURF WILL RECEIVE MEDIUM TO INTENSIVE MANAGEMENT. CERTIFIED PERENNIAL RYEGRASS CULTIVARS/CERTIFIED KENTUCKY BLUEGRASS SEEDING RATE: 2 POUNDS MIXTURE PER 1000 SQUARE FEET. CHOOSE A MINIMUM OF THREE KENTUCKY BLUEGRASS CULTIVARS WITH EACH RANGING FROM 10 TO 35 PERCENT OF THE TOTAL MIXTURE BY WEIGHT.
      iii. TALL FESCUE/KENTUCKY BLUEGRASS: FULL SUN MIXTURE: FOR USE IN DROUGHT PRONE AREAS AND/OR FOR AREAS RECEIVING LOW TO MEDIUM MANAGEMENT IN FULL SUN TO MEDIUM SHADE. RECOMMENDED MIXTURE INCLUDES; CERTIFIED TALL FESCUE CULTIVARS 95 TO 100 PERCENT, CERTIFIED KENTUCKY BLUEGRASS CULTIVARS 0 TO 5 PERCENT. SEEDING RATE: 5 TO 8 POUNDS PER 1000 SQUARE FEET. ONE OR MORE CULTIVARS MAY BE BLENDED.
      iv. KENTUCKY BLUEGRASS/FINE FESCUE: SHADE MIXTURE: FOR USE IN AREAS WITH SHADE IN BLUEGRASS LAWNS. FOR ESTABLISHMENT IN HIGH QUALITY, INTENSIVELY MANAGED TURF AREA. MIXTURE INCLUDES; CERTIFIED KENTUCKY BLUEGRASS CULTIVARS 30 TO 40 PERCENT AND CERTIFIED FINE FESCUE 60 TO 70 PERCENT. SEEDING RATE: 1½ TO 3 POUNDS PER 1000 SQUARE FEET.

      NOTES:
      SELECT TURFGRASS VARIETIES FROM THOSE LISTED IN THE MOST CURRENT UNIVERSITY OF MARYLAND PUBLICATION, AGRONOMY MEMO #77, "TURFGRASS CULTIVAR RECOMMENDATIONS FOR MARYLAND".

      CHOOSE CERTIFIED MATERIAL. CERTIFIED MATERIAL IS THE BEST GUARANTEE OF CULTIVAR PURITY. THE CERTIFICATION PROGRAM OF THE MARYLAND DEPARTMENT OF AGRICULTURE, TURF AND SEED SECTION, PROVIDES A RELIABLE MEANS OF CONSUMER PROTECTION AND ASSURES A PURE GENETIC LINE.

   c. IDEAL TIMES OF SEEDING FOR TURF GRASS MIXTURES
      WESTERN MARYLAND: MARCH 15 TO JUNE 1, AUGUST 1 TO OCTOBER 1 (HARDINESS ZONES: 5B, 6A)

      CENTRAL MARYLAND: MARCH 1 TO MAY 15, AUGUST 15 TO OCTOBER 15 (HARDINESS ZONE: 6B)

      SOUTHERN MD, EASTERN SHORE: MARCH 1 TO MAY 15, AUGUST 15 TO OCTOBER 15 (HARDNESS ZONES: 7A, 7B)

   d. TILL AREAS TO RECEIVE SEED BY DISKING OR OTHER APPROVED METHODS TO A DEPTH OF 2 TO 4 INCHES, LEVEL AND RAKE THE AREAS TO PREPARE A PROPER SEEDBED. REMOVE STONES AND DEBRIS OVER 1 ½ INCHES IN DIAMETER. THE RESULTING SEEDBED MUST BE IN SUCH CONDITION THAT FUTURE MOWING OF GRASSES WILL POSE NO DIFFICULTY.
   e. IF SOIL MOISTURE IS DEFICIENT, SUPPLY NEW SEEDINGS WITH ADEQUATE WATER FOR PLANT GROWTH (½ TO 1 INCH EVER 3 TO 4 DAYS DEPENDING ON SOIL TEXTURE) UNTIL THEY ARE FIRMLY ESTABLISHED. THIS IS ESPECIALLY TRUE WHEN SEEDINGS ARE MADE LATE IN THE PLANTING SEASON, IN ABNORMALLY DRY OR HOT SEASONS, OR ON ADVERSE SITES.

B. SOD: TO PROVIDE QUICK COVER ON DISTURBED AREAS (2:1 GRADE OR FLATTER).

1. GENERAL SPECIFICATIONS
   a. CLASS OF TURFGRASS SOD MUST BE MARYLAND STATE CERTIFIED. SOD LABELS MUST BE MADE AVAILABLE TO THE JOB FOREMAN AND INSPECTOR.
   b. SOD MUST BE MACHINE CUT AT A UNIFORM SOIL THICKNESS OF ¾ INCHES, PLUS OR MINUS ¼ INCH, AT THE TIME OF CUTTING. MEASUREMENT FOR THICKNESS MUST EXCLUDE TOP GROWTH AND THATCH. BROKEN PADS AND TORN OR UNEVEN ENDS WILL NOT BE ACCEPTABLE.
   c. STANDARD SIZE SECTIONS OF SOD MUST BE STRONG ENOUGH TO SUPPORT THEIR OWN WEIGHT AND RETAIN THEIR SIZE AND SHAPE WHEN SUSPENDED VERTICALLY WITH A FIRM GRASP ON THE UPPER 10 PERCENT OF THE SECTION.
   d. SOD MUST NOT BE HARVESTED OR TRANSPLANTED WHEN MOISTURE CONTENT (EXCESSIVELY DRY OR WET) MAY ADVERSELY AFFECT ITS SURVIVAL.
   e. SOD MUST BE HARVESTED, DELIVERED, AND INSTALLED WITHIN A PERIOD OF 36 HOURS. SOD NOT TRANSPLANTED WITHIN THIS PERIOD MUST BE APPROVED BY AN AGRONOMIST OR SOIL SCIENTIST PRIOR TO ITS INSTALLATION

2. SOD INSTALLATION
   a. DURING PERIODS OF EXCESSIVELY HIGH TEMPERATURE OR IN AREAS HAVING DRY SUBSOIL, LIGHTLY IRRIGATE THE SUBSOIL IMMEDIATELY PRIOR TO LAYING THE SOD.
   b. LAY THE FIRST ROW OF SOD IN A STRAIGHT LINE WITH SUBSEQUENT ROWS PLACE PARALLEL TO IT AND TIGHTLY WEDGED AGAINST EACH OTHER. STAGGER LATERAL JOINTS TO PROMOTE MORE UNIFORM GROWTH AND STRENGTH. ENSURE THAT SOD IS NOT STRETCHED OR OVERLAPPED AND THAT ALL JOINTS ARE BUTTED TIGHT IN ORDER TO PREVENT VOIDS WHICH WOULD CAUSE AIR DRYING OF THE ROOTS.
   c. WHEREVER POSSIBLE, LAY SOD WITH THE LONG EDGES PARALLEL TO THE CONTOUR AND WITH STAGGERING JOINTS. ROLL AND TAMP, PEG OR OTHERWISE SECURE THE SOD TO PREVENT SLIPPAGE ON SLOPES. ENSURE SOLID CONTACT EXISTS BETWEEN SOD ROOTS AND THE UNDERLYING SOIL SURFACE.
   d. WATER THE SOD IMMEDIATELY FOLLOWING ROLLING AND TAMPING UNTIL THE UNDERSIDE OF THE NEW SOD PAD AND SOIL SURFACE BELOW THE SOD ARE THOROUGHLY WET. COMPLETE THE OPERATION OF LAYING, TAMPING AND IRRIGATING FOR ANY PIECE OF SOD WITHIN EIGHT HOURS.
3. SOD MAINTENANCE
   a. IN THE ABSENCE OF ADEQUATE RAINFALL, WATER DAILY DURING THE FIRST WEEK OR AS OFTEN AND SUFFICIENTLY AS NECESSARY TO MAINTAIN MOIST SOIL TO A DEPTH OF 4 INCHES. WATER SOD DURING THE HEAT OF THE DAY TO PREVENT WILTING.
   b. AFTER THE FIRST WEEK, SOD WATERING IS REQUIRED AS NECESSARY TO MAINTAIN ADEQUATE MOISTURE CONTENT.
   c. DO NOT MOW UNTIL THE SOD IS FIRMLY ROOTED. NO MORE THAN ⅓ OF THE GRASS LEAF MUST BE REMOVED BY THE INITIAL CUTTING OR SUBSEQUENT CUTTINGS. MAINTAIN A GRASS HEIGHT OF AT LEAST 3 INCHES UNLESS OTHERWISE SPECIFIED.

B-4-8 STANDARDS AND SPECIFICATIONS FOR STOCKPILE AREAS

DEFINITION
A MOUND OR PILE OF SOIL PROTECTED BY APPROPRIATELY DESIGNED EROSION AND SEDIMENT CONTROL MEASURES.
PURPOSE
TO PROVIDE A DESIGNATED LOCATION FOR THE TEMPORARY STORAGE OF SOIL THAT CONTROLS THE POTENTIAL FOR EROSION, SEDIMENTATION, AND CHANGES TO DRAINAGE PATTERNS.

CONDITIONS WHERE PRACTICE APPLIES
STOCKPILE AREAS ARE UTILIZED WHEN IT IS NECESSARY TO SALVAGE AND STORE SOIL FOR LATER USE.

CRITERIA

THE STOCKPILE LOCATION AND ALL RELATED SEDIMENT CONTROL PRACTICES MUST BE CLEARLY INDICATED ON THE EROSION AND SEDIMENT CONTROL PLAN.
4. THE FOOTPRINT OF THE STOCKPILE MUST BE SIZED TO ACCOMMODATE THE ANTICIPATED VOLUME OF MATERIA

## DETAIL B-1 STABILIZED CONSTRUCTION ENTRANCE

STANDARD SYMBOL: SCE

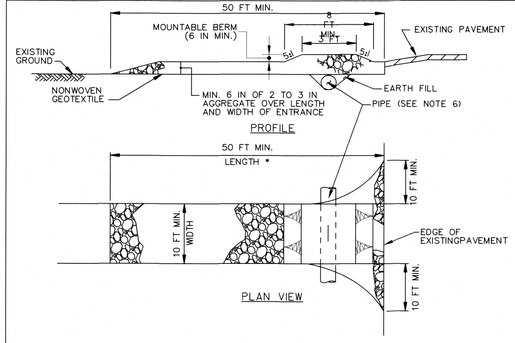


CONSTRUCTION SPECIFICATIONS

1. PLACE STABILIZED CONSTRUCTION ENTRANCE IN ACCORDANCE WITH THE APPROVED PLAN. VEHICLES MUST TRAVEL OVER THE ENTIRE LENGTH OF THE SCE. USE MINIMUM LENGTH OF 50 FEET (•30 FEET FOR SINGLE RESIDENCE LOT). USE MINIMUM WIDTH OF 10 FEET. FLARE SCE 10 FEET MINIMUM AT THE EXISTING ROAD TO PROVIDE A TURNING RADIUS.
2. PIPE ALL SURFACE WATER FLOWING TO OR DIVERTED TOWARD THE SCE UNDER THE ENTRANCE, MAINTAINING POSITIVE DRAINAGE. PROTECT PIPE INSTALLED THROUGH THE SCE WITH A MOUNTABLE BERM WITH 5:1 SLOPES AND A MINIMUM OF 12 INCHES OF STONE OVER THE PIPE. PROVIDE PIPE AS SPECIFIED ON APPROVED PLAN. WHEN THE SCE IS LOCATED AT A HIGH SPOT AND HAS NO DRAINAGE TO CONVEY, A PIPE IS NOT NECESSARY. A MOUNTABLE BERM IS REQUIRED WHEN SCE IS NOT LOCATED AT A HIGH SPOT.
3. PREPARE SUBGRADE AND PLACE NONWOVEN GEOTEXTILE, AS SPECIFIED IN SECTION H-1 MATERIALS.
4. PLACE CRUSHED AGGREGATE (2 TO 3 INCHES IN SIZE) OR EQUIVALENT RECYCLED CONCRETE (WITHOUT REBAR) AT LEAST 6 INCHES DEEP OVER THE LENGTH AND WIDTH OF THE SCE.
5. MAINTAIN ENTRANCE IN A CONDITION THAT MINIMIZES TRACKING OF SEDIMENT. ADD STONE OR MAKE OTHER REPAIRS AS CONDITIONS DEMAND TO MAINTAIN CLEAN SURFACE, MOUNTABLE BERM, AND SPECIFIED DIMENSIONS. IMMEDIATELY REMOVE STONE AND/OR SEDIMENT SPILLED, DROPPED, OR TRACKED ONTO ADJACENT ROADWAY BY VACUUMING, SCRAPING, AND/OR SWEEPING. WASHING ROADWAY TO REMOVE MUD TRACKED ONTO PAVEMENT IS NOT ACCEPTABLE UNLESS WASH WATER IS DIRECTED TO AN APPROVED SEDIMENT CONTROL PRACTICE.

MARYLAND STANDARDS AND SPECIFICATIONS FOR SOIL EROSION AND SEDIMENT CONTROL

| U.S. DEPARTMENT OF AGRICULTURE NATURAL RESOURCES CONSERVATION SERVICE | 2011 | MARYLAND DEPARTMENT OF ENVIRONMENT WATER MANAGEMENT ADMINISTRATION |
|---|---|---|

## DETAIL C-7 TEMPORARY BARRIER DIVERSION

STANDARD SYMBOL: TBD

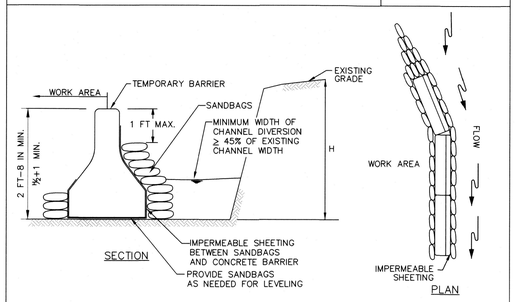


CONSTRUCTION SPECIFICATIONS

1. FOR SANDBAGS USE MATERIALS THAT ARE RESISTANT TO ULTRA-VIOLET RADIATION, TEARING, AND PUNCTURE AND WOVEN TIGHTLY ENOUGH TO PREVENT LEAKAGE OF FILL MATERIAL.
2. USE BARRIER MADE OF CONCRETE OR OTHER APPROVED MATERIAL.
3. USE 10 MIL OR THICKER, UV RESISTANT, IMPERMEABLE SHEETING OR OTHER APPROVED MATERIAL THAT IS IMPERMEABLE AND RESISTANT TO PUNCTURING AND TEARING.
4. ESTABLISH TOP ELEVATION AT H/2 + 1 FOOT FOR PROJECTS OF DURATION LESS THAN 2 WEEKS OR AS SPECIFIED ON APPROVED PLAN.
5. INSTALL DIVERSION STRUCTURE FROM UPGRADE TO DOWNGRADE.
6. PLACE IMPERMEABLE SHEETING SUCH THAT UPGRADE PORTION OVERLAPS DOWNGRADE PORTION BY A MINIMUM OF 18 INCHES.
7. USE SANDBAG BASE FOR LEVELING AND TO ESTABLISH MINIMUM TOP ELEVATION OF THE BARRIER AS REQUIRED.
8. DISPOSE OF ALL EXCAVATED MATERIALS IN AN APPROVED DISPOSAL AREA OUTSIDE OF THE 100-YEAR FLOODPLAIN.
9. DEWATER WORK AREA USING AN APPROVED EROSION AND SEDIMENT CONTROL PRACTICE AS SPECIFIED ON APPROVED PLAN.
10. KEEP ABUTMENTS BETWEEN CONCRETE BARRIERS WATER TIGHT. REPLACE SANDBAGS AND IMPERMEABLE SHEETING IF TORN.

MARYLAND STANDARDS AND SPECIFICATIONS FOR SOIL EROSION AND SEDIMENT CONTROL

| U.S. DEPARTMENT OF AGRICULTURE NATURAL RESOURCES CONSERVATION SERVICE | 2011 | MARYLAND DEPARTMENT OF ENVIRONMENT WATER MANAGEMENT ADMINISTRATION |
|---|---|---|

## DETAIL E-1 SILT FENCE

STANDARD SYMBOL: SF

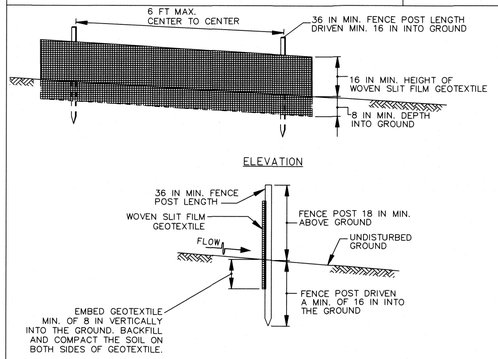


1 OF 2

MARYLAND STANDARDS AND SPECIFICATIONS FOR SOIL EROSION AND SEDIMENT CONTROL

| U.S. DEPARTMENT OF AGRICULTURE NATURAL RESOURCES CONSERVATION SERVICE | 2011 | MARYLAND DEPARTMENT OF ENVIRONMENT WATER MANAGEMENT ADMINISTRATION |
|---|---|---|

## DETAIL E-1 SILT FENCE

STANDARD SYMBOL: SF

CONSTRUCTION SPECIFICATIONS

1. USE WOOD POSTS (1¾ X 1¾ ¾/1⅛ INCH (MINIMUM) SQUARE CUT OF SOUND QUALITY HARDWOOD. AS AN ALTERNATIVE TO WOODEN POST USE STANDARD "T" OR "U" SECTION STEEL POSTS WEIGHING NOT LESS THAN 1 POUND PER LINEAR FOOT.
2. USE 36 INCH MINIMUM POSTS DRIVEN 16 INCH MINIMUM INTO GROUND NO MORE THAN 6 FEET APART.
3. USE WOVEN SLIT FILM GEOTEXTILE AS SPECIFIED IN SECTION H-1 MATERIALS AND FASTEN GEOTEXTILE SECURELY TO UPSLOPE SIDE OF FENCE POSTS WITH WIRE TIES OR STAPLES AT TOP AND MID-SECTION.
4. PROVIDE MANUFACTURER CERTIFICATION TO THE AUTHORIZED REPRESENTATIVE OF THE INSPECTION/ENFORCEMENT AUTHORITY SHOWING THAT THE GEOTEXTILE USED MEETS THE REQUIREMENTS IN SECTION H-1 MATERIALS.
5. EMBED GEOTEXTILE A MINIMUM OF 8 INCHES VERTICALLY INTO THE GROUND. BACKFILL AND COMPACT THE SOIL ON BOTH SIDES OF FABRIC.
6. WHERE TWO SECTIONS OF GEOTEXTILE ADJOIN: OVERLAP, TWIST, AND STAPLE TO POST IN ACCORDANCE WITH THIS DETAIL.
7. EXTEND BOTH ENDS OF THE SILT FENCE A MINIMUM OF FIVE HORIZONTAL FEET UPSLOPE AT 45 DEGREES TO THE MAIN FENCE ALIGNMENT TO PREVENT RUNOFF FROM GOING AROUND THE ENDS OF THE SILT FENCE.
8. REMOVE ACCUMULATED SEDIMENT AND DEBRIS WHEN BULGES DEVELOP IN SILT FENCE OR WHEN SEDIMENT REACHES 25% OF FENCE HEIGHT. REPLACE GEOTEXTILE IF TORN. IF UNDERMINING OCCURS, REINSTALL FENCE.

2 OF 2

MARYLAND STANDARDS AND SPECIFICATIONS FOR SOIL EROSION AND SEDIMENT CONTROL

| U.S. DEPARTMENT OF AGRICULTURE NATURAL RESOURCES CONSERVATION SERVICE | 2011 | MARYLAND DEPARTMENT OF ENVIRONMENT WATER MANAGEMENT ADMINISTRATION |
|---|---|---|

REVISIONS

| NO. | DATE | BY | DESCRIPTION |
|---|---|---|---|

DESIGN INFORMATION
DESIGNED BY: RCI/SMD
DRAWN BY: SMB/CAG/JRG
CHECKED BY: MP
PROJECT MANAGER: RCI

PROFESSIONAL CERTIFICATION. I HEREBY CERTIFY THAT THESE DOCUMENTS WERE PREPARED OR APPROVED BY ME, AND THAT I AM A DULY LICENSED PROFESSIONAL ENGINEER UNDER THE LAWS OF THE STATE OF MARYLAND, LICENSE NO. 15453 EXPIRATION DATE: 7/02/2023

SEAL

WASHINGTON COUNTY DEPARTMENT OF ENGINEERING SERVICES
16232 ELLIOTT PARKWAY
WILLIAMSPORT, MD 21795
WASHINGTON COUNTY, MARYLAND

E&S STANDARD NOTES AND DETAILS III


EA Engineering, Science, and Technology, Inc., PBC
Hunt Valley Center
225 Schilling Circle, Suite 400
Hunt Valley, Maryland 21031
(410) 584-7000


DATE: APRIL 2022

PROJECT NUMBER: 1556701

C-513

SHEET: 46 OF 76

SP-21-025 / SWCP-21-020

FILE PATH: \\LOVETONCAD\CAD\PROJECTS\1556701 - WASHINGTON CO. FMCAD\PRODUCTION\DESIGN SET\1556701 - E&S KEY MAP.DWG [C-513] PERRY, JEFF 4/26/2022 2:48 PM

## DETAIL F-2 SUMP PIT

STANDARD SYMBOL: ☒SP

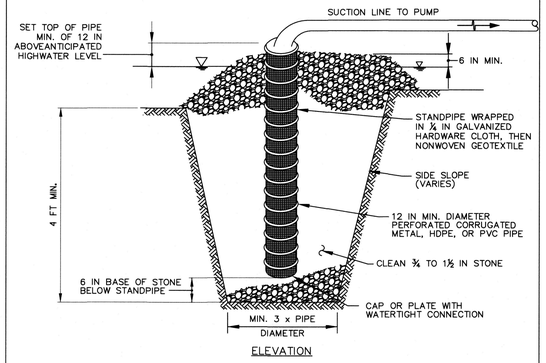


ELEVATION

CONSTRUCTION SPECIFICATIONS

1. USE 12 INCH OR LARGER DIAMETER CORRUGATED METAL, HDPE, OR PVC PIPE WITH 1 INCH DIAMETER PERFORATIONS, 6 INCHES ON CENTER. BOTTOM OF PIPE MUST BE CAPPED WITH WATERTIGHT SEAL.
2. WRAP PIPE WITH ¼ INCH GALVANIZED HARDWARE CLOTH AND WRAP NONWOVEN GEOTEXTILE, AS SPECIFIED IN SECTION H–1 MATERIALS, OVER THE HARDWARE CLOTH.
3. EXCAVATE PIT TO THREE TIMES THE PIPE DIAMETER AND FOUR FEET IN DEPTH. PLACE ¾ TO 1½ INCH STONE OR EQUIVALENT RECYCLED CONCRETE, 6 INCHES IN DEPTH PRIOR TO PIPE PLACEMENT.
4. SET TOP OF PIPE MINIMUM 12 INCHES ABOVE ANTICIPATED WATER SURFACE ELEVATION.
5. BACKFILL PIT AROUND THE PIPE WITH ¾ TO 1½ INCH CLEAN STONE OR EQUIVALENT RECYCLED CONCRETE AND EXTEND STONE A MINIMUM OF 6 INCHES ABOVE ANTICIPATED WATER SURFACE ELEVATION.
6. DISCHARGE TO A STABLE AREA AT A NONEROSIVE RATE.
7. A SUMP PIT REQUIRES FREQUENT MAINTENANCE. IF SYSTEM CLOGS, REMOVE PERFORATED PIPE AND REPLACE GEOTEXTILE AND STONE. KEEP POINT OF DISCHARGE FREE OF EROSION.

| MARYLAND STANDARDS AND SPECIFICATIONS FOR SOIL EROSION AND SEDIMENT CONTROL | | |
|---|---|---|
| U.S. DEPARTMENT OF AGRICULTURE NATURAL RESOURCES CONSERVATION SERVICE | 2011 | MARYLAND DEPARTMENT OF ENVIRONMENT WATER MANAGEMENT ADMINISTRATION |

## DETAIL F-3 PORTABLE SEDIMENT TANK

STANDARD SYMBOL: ☒PST

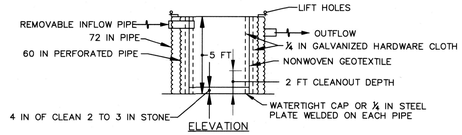


ELEVATION

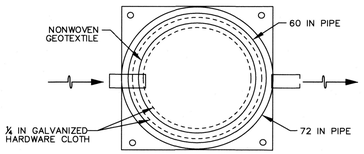


PLAN VIEW

CONSTRUCTION SPECIFICATIONS

1. PROVIDE 1 CUBIC FOOT OF STORAGE FOR EACH GALLON PER MINUTE OF PUMP CAPACITY. REQUIRED STORAGE VOLUME MAY BE ATTAINED BY PLACEMENT OF TANKS IN PARALLEL WITH INFLOW EVENLY DISTRIBUTED AMONG TANKS. OVERTOPPING OF TANKS IS NOT PERMITTED.
2. USE 60 INCH CORRUGATED METAL OR PLASTIC PIPE WITH 1 INCH DIAMETER PERFORATIONS, 6 INCHES ON CENTER FOR THE INNER PIPE. LINE PIPE WITH NONWOVEN GEOTEXTILE, AS SPECIFIED IN SECTION H–1 MATERIALS, SANDWICHED BETWEEN, AND ATTACHED TO, ¼ INCH HARDWARE CLOTH.
3. OVERLAP GEOTEXTILE 8 INCHES MINIMUM AT VERTICAL SEAM AND AT THE BOTTOM PLATE.
4. ANCHOR GEOTEXTILE AT BOTTOM OF TANK WITH 4 INCHES OF 2 TO 3 INCH CLEAN STONE OR EQUIVALENT RECYCLED CONCRETE.
5. USE 72 INCH CORRUGATED METAL OR PLASTIC OUTER PIPE WITH PERMANENT OUTFLOW PIPE WITH INVERT LOWER THAN INFLOW PIPE
6. INFLOW PIPE MUST DISCHARGE INTO INNER PIPE AND BE REMOVABLE.
7. PLACE TANK ON LEVEL SURFACE AND DISCHARGE TO A STABLE AREA AT A NONEROSIVE RATE.
8. A PORTABLE SEDIMENT TANK REQUIRES FREQUENT MAINTENANCE. REMOVE ACCUMULATED SEDIMENT FROM INNER PIPE WHEN IT REACHES TWO FEET IN DEPTH. IF SYSTEM CLOGS, PULL OUT INNER PIPE, REMOVE ACCUMULATED SEDIMENT, AND REPLACE GEOTEXTILE. KEEP POINT OF DISCHARGE FREE OF EROSION.

| MARYLAND STANDARDS AND SPECIFICATIONS FOR SOIL EROSION AND SEDIMENT CONTROL | | |
|---|---|---|
| U.S. DEPARTMENT OF AGRICULTURE NATURAL RESOURCES CONSERVATION SERVICE | 2011 | MARYLAND DEPARTMENT OF ENVIRONMENT WATER MANAGEMENT ADMINISTRATION |

## Maryland's Guidelines To Waterway Construction
## DETAIL 1.2: PUMP–AROUND PRACTICE

PLAN VIEW

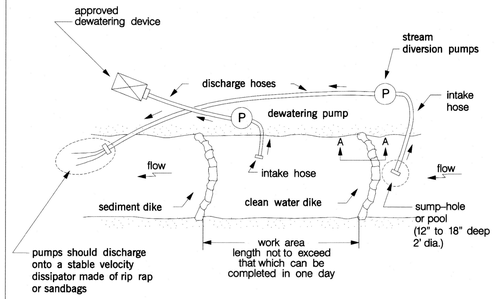


SECTION A–A

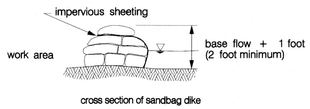


cross section of sandbag dike

| TEMPORARY INSTREAM CONSTRUCTION MEASURES | *REVISED NOVEMBER 2000* *PAGE 1.2 - 3* | MARYLAND DEPARTMENT OF THE ENVIRONMENT WATER MANAGEMENT ADMINISTRATION |
|---|---|---|

NOTE:

1. CONTRACTOR SHALL SUBMIT AN IMPLEMENTATION SEQUENCE FOR ENGINEER REVIEW AND APPROVAL PRIOR TO CONSTRUCTION.

## Maryland's Guidelines To Waterway Construction
## DETAIL 2.6: NATURAL FIBER ROLLS

DETAIL

Adapted From Goldsmith and Bestmann (1992)

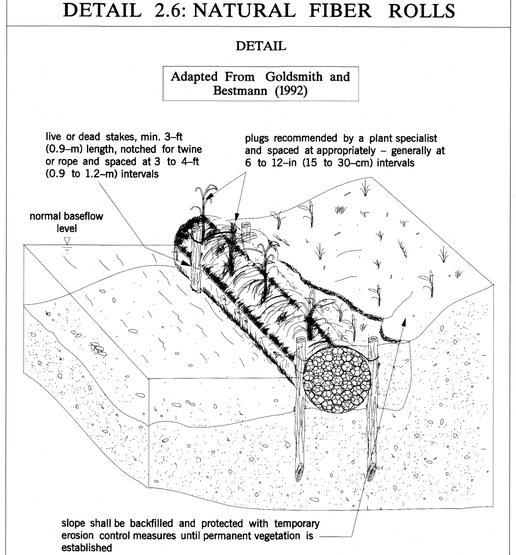


| SLOPE PROTECTION AND STABILIZATION TECHNIQUES | *PAGE 2.6 - 3* | MARYLAND DEPARTMENT OF THE ENVIRONMENT WATER MANAGEMENT ADMINISTRATION |
|---|---|---|

NOTE:

1. DETAIL SHOWN INTENDED FOR CONTRACTOR'S USE IN SLOPE PROTECTION AND STABILIZATION FOR STREAM BED REPAIR AFTER FORCEMAIN INSTALLATION. CONTRACTOR SHALL PROVIDE CONSTRUCTION SUBMITTAL FOR ENGINEERS REVIEW AND APPROVAL PRIOR TO INSTALLATION.

## DETAIL F-4 FILTER BAG

STANDARD SYMBOL: ☒FB

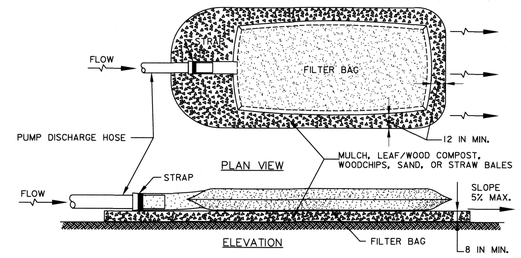


ELEVATION

CONSTRUCTION SPECIFICATIONS

1. TIGHTLY SEAL SLEEVE AROUND THE PUMP DISCHARGE HOSE WITH A STRAP OR SIMILAR DEVICE.
2. PLACE FILTER BAG ON SUITABLE BASE (E.G., MULCH, LEAF/WOOD COMPOST, WOODCHIPS, SAND, OR STRAW BALES) LOCATED ON A LEVEL OR 5% MAXIMUM SLOPING SURFACE. DISCHARGE TO A STABILIZED AREA. EXTEND BASE A MINIMUM OF 12 INCHES FROM EDGES OF BAG.
3. CONTROL PUMPING RATE TO PREVENT EXCESSIVE PRESSURE WITHIN THE FILTER BAG IN ACCORDANCE WITH THE MANUFACTURER RECOMMENDATIONS. AS THE BAG FILLS WITH SEDIMENT, REDUCE PUMPING RATE.
4. REMOVE AND PROPERLY DISPOSE OF FILTER BAG UPON COMPLETION OF PUMPING OPERATIONS OR AFTER BAG HAS REACHED CAPACITY, WHICHEVER OCCURS FIRST. SPREAD THE DEWATERED SEDIMENT FROM THE BAG IN AN APPROVED UPLAND AREA AND STABILIZE WITH SEED AND MULCH BY THE END OF THE WORK DAY. RESTORE THE SURFACE AREA BENEATH THE BAG TO ORIGINAL CONDITION UPON REMOVAL OF THE DEVICE.
5. USE NONWOVEN GEOTEXTILE WITH DOUBLE STITCHED SEAMS USING HIGH STRENGTH THREAD. SIZE SLEEVE TO ACCOMMODATE A MAXIMUM 4 INCH DIAMETER PUMP DISCHARGE HOSE. THE BAG MUST BE MANUFACTURED FROM A NONWOVEN GEOTEXTILE THAT MEETS OR EXCEEDS MINIMUM AVERAGE ROLL VALUES (MARV) FOR THE FOLLOWING:

| | | |
|---|---|---|
| GRAB TENSILE | 250 LB | ASTM D–4632 |
| PUNCTURE | 150 LB | ASTM D–4833 |
| FLOW RATE | 70 GAL/MIN/FT² | ASTM D–4491 |
| PERMITTIVITY ($SEC^{-1}$) | 1.2 $SEC^{-1}$ | ASTM D–4491 |
| UV RESISTANCE | 70% STRENGTH @ 500 HOURS | ASTM D–4355 |
| APPARENT OPENING SIZE (AOS) | 0.15–0.18 MM | ASTM D–4751 |
| SEAM STRENGTH | 90% | ASTM D–4632 |

6. REPLACE FILTER BAG IF BAG CLOGS OR HAS RIPS, TEARS, OR PUNCTURES. DURING OPERATION KEEP CONNECTION BETWEEN PUMP HOSE AND FILTER BAG WATER TIGHT. REPLACE BEDDING IF IT BECOMES DISPLACED.

| MARYLAND STANDARDS AND SPECIFICATIONS FOR SOIL EROSION AND SEDIMENT CONTROL | | |
|---|---|---|
| U.S. DEPARTMENT OF AGRICULTURE NATURAL RESOURCES CONSERVATION SERVICE | 2011 | MARYLAND DEPARTMENT OF ENVIRONMENT WATER MANAGEMENT ADMINISTRATION |

## DETAIL B-4-6-B TEMPORARY SOIL STABILIZATION MATTING SLOPE APPLICATION

STANDARD SYMBOL: TSSMS – * lb/ft² (* INCLUDE SHEAR STRESS)

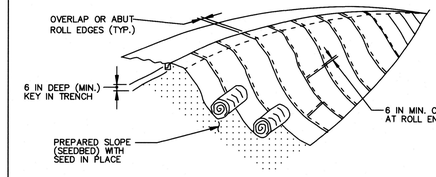


ISOMETRIC VIEW

CONSTRUCTION SPECIFICATIONS

1. USE MATTING THAT HAS A DESIGN VALUE FOR SHEAR STRESS EQUAL TO OR HIGHER THAN THE SHEAR STRESS DESIGNATED ON APPROVED PLANS.
2. USE TEMPORARY SOIL STABILIZATION MATTING MADE OF DEGRADABLE (LASTS 6 MONTHS MINIMUM) NATURAL OR MAN–MADE FIBERS (MOSTLY ORGANIC). MAT MUST HAVE UNIFORM THICKNESS AND DISTRIBUTION OF FIBERS THROUGHOUT AND BE SMOLDER RESISTANT. CHEMICALS USED IN THE MAT MUST BE NON–LEACHING AND NON–TOXIC TO VEGETATION AND SEED GERMINATION AND NON–INJURIOUS TO THE SKIN. IF PRESENT, NETTING MUST BE EXTRUDED PLASTIC WITH A MAXIMUM MESH OPENING OF 2x2 INCHES AND SUFFICIENTLY BONDED OR SEWN ON 2 INCH CENTERS ALONG LONGITUDINAL AXIS OF THE MATERIAL TO PREVENT SEPARATION OF THE NET FROM THE PARENT MATERIAL.
3. SECURE MATTING USING STEEL STAPLES, WOOD STAKES, OR BIODEGRADABLE EQUIVALENT. STAPLES MUST BE "U" OR "T" SHAPED STEEL WIRE HAVING A MINIMUM GAUGE OF NO. 11 AND NO. 8 RESPECTIVELY. "U" SHAPED STAPLES MUST AVERAGE 1 TO 1½ INCHES WIDE AND BE A MINIMUM OF 6 INCHES LONG. "T" SHAPED STAPLES MUST HAVE A MINIMUM 8 INCH MAIN LEG, A MINIMUM 1 INCH SECONDARY LEG, AND A MINIMUM 4 INCH HEAD. WOOD STAKES MUST BE ROUGH–SAWN HARDWOOD, 12 TO 24 INCHES IN LENGTH, 1x3 INCH IN CROSS SECTION, AND WEDGE SHAPED AT THE BOTTOM.
4. PERFORM FINAL GRADING, TOPSOIL APPLICATION, SEEDBED PREPARATION, AND PERMANENT SEEDING IN ACCORDANCE WITH SPECIFICATIONS. PLACE MATTING WITHIN 48 HOURS OF COMPLETING SEEDING OPERATIONS UNLESS END OF WORKDAY STABILIZATION IS SPECIFIED ON THE APPROVED EROSION & SEDIMENT CONTROL PLAN.
5. UNROLL MATTING DOWNSLOPE. LAY MAT SMOOTHLY AND FIRMLY UPON THE SEEDED SURFACE. AVOID STRETCHING THE MATTING.
6. OVERLAP OR ABUT ROLL EDGES PER MANUFACTURER RECOMMENDATIONS. OVERLAP ROLL ENDS BY 6 INCHES (MINIMUM), WITH THE UPSLOPE MAT OVERLAPPING ON TOP OF THE DOWNSLOPE MAT.
7. KEY IN THE UPSLOPE END OF MAT 6 INCHES (MINIMUM) BY DIGGING A TRENCH, PLACING THE MATTING ROLL END IN THE TRENCH, STAPLING THE MAT IN PLACE, REPLACING THE EXCAVATED MATERIAL, AND TAMPING TO SECURE THE MAT END IN THE KEY.
8. STAPLE/STAKE MAT IN A STAGGERED PATTERN ON 4 FOOT (MAXIMUM) CENTERS THROUGHOUT AND 2 FOOT (MAXIMUM) CENTERS ALONG SEAMS, JOINTS, AND ROLL ENDS.
9. ESTABLISH AND MAINTAIN VEGETATION SO THAT REQUIREMENTS FOR ADEQUATE VEGETATIVE ESTABLISHMENT ARE CONTINUOUSLY MET IN ACCORDANCE WITH SECTION B–4 VEGETATIVE STABILIZATION.

| MARYLAND STANDARDS AND SPECIFICATIONS FOR SOIL EROSION AND SEDIMENT CONTROL | | |
|---|---|---|
| U.S. DEPARTMENT OF AGRICULTURE NATURAL RESOURCES CONSERVATION SERVICE | 2011 | MARYLAND DEPARTMENT OF ENVIRONMENT WATER MANAGEMENT ADMINISTRATION |

NOTE:

1. SEE SHEAR STRESS IDENTIFIED ON PLAN VIEW AT EACH PROPOSED INSTALLATION LOCATION.

REVISIONS

| NO. | DATE | BY | DESCRIPTION |
|---|---|---|---|

DESIGN INFORMATION

DESIGNED BY: RCI/SMD
DRAWN BY: SMB/CAG/JRG
CHECKED BY: MP
PROJECT MANAGER: RCI

PROFESSIONAL CERTIFICATION. I HEREBY CERTIFY THAT THESE DOCUMENTS WERE PREPARED OR APPROVED BY ME, AND THAT I AM A DULY LICENSED PROFESSIONAL ENGINEER UNDER THE LAWS OF THE STATE OF MARYLAND, LICENSE NO. 15453 EXPIRATION DATE: 7/02/2023

SEAL

4/29/22

WASHINGTON COUNTY DEPARTMENT OF ENGINEERING SERVICES
16232 ELLIOTT PARKWAY
WILLIAMSPORT, MD 21795
WASHINGTON COUNTY, MARYLAND

E&S STANDARD NOTES AND DETAILS IV


EA Engineering, Science, and Technology, Inc., PBC
Hunt Valley Center
225 Schilling Circle, Suite 400
Hunt Valley, Maryland 21031
(410) 584-7000


DATE: APRIL 2022

PROJECT NUMBER: 1556701

C-514

SHEET: 47 OF 76

SP-21-025 / SWCP-21-020

FILE PATH: \\LOVETONCAD\CADD\PROJECTS\1556701 - WASHINGTON CO. FMCAD\PRODUCTION\DESIGN SET\1556701 - E&S KEY MAP.DWG [C-514] PERRY, JEFF 4/29/2022 2:48 PM

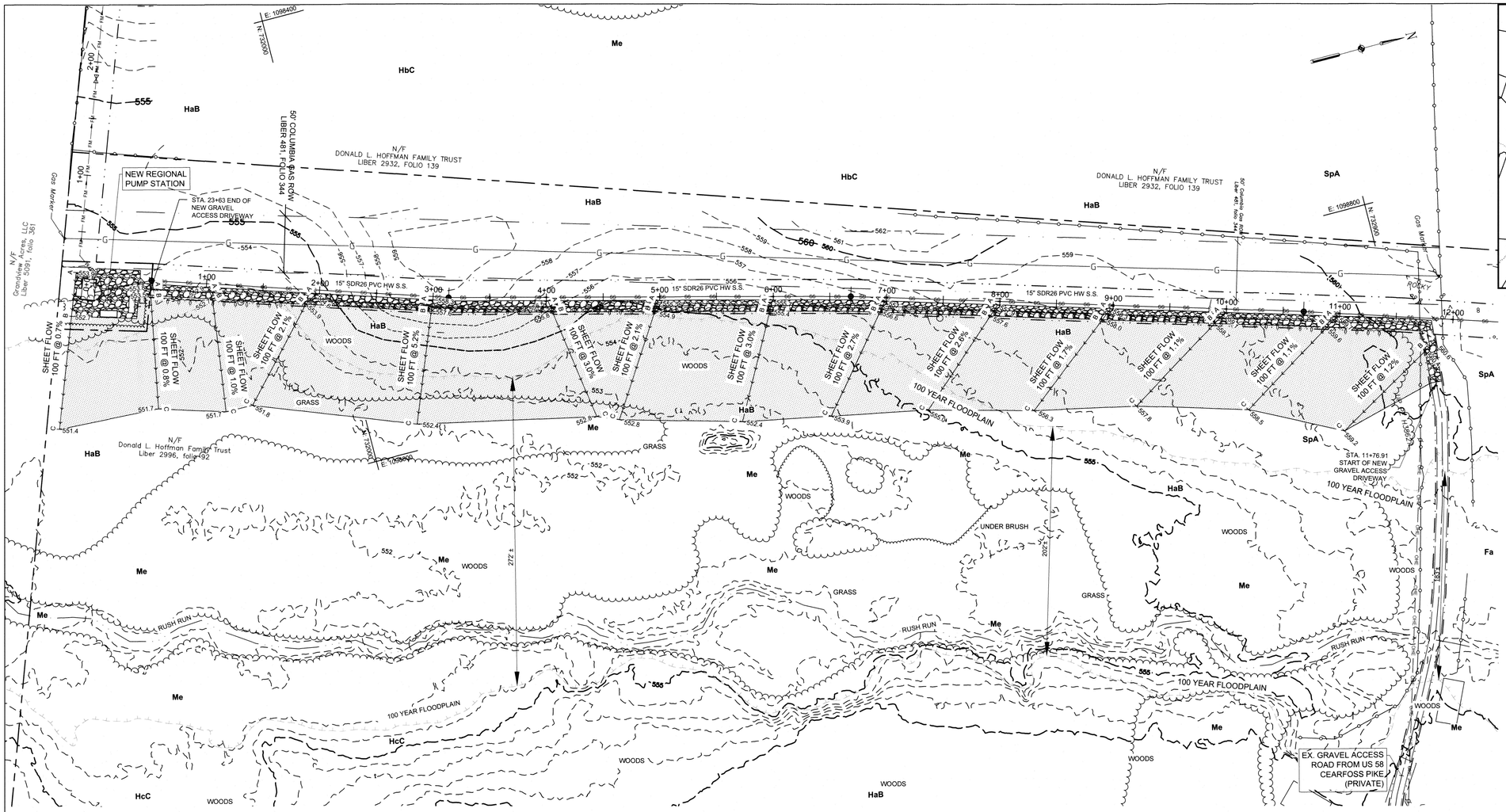


**STORM WATER MANAGEMENT PLAN**
SCALE: 1" = 50'

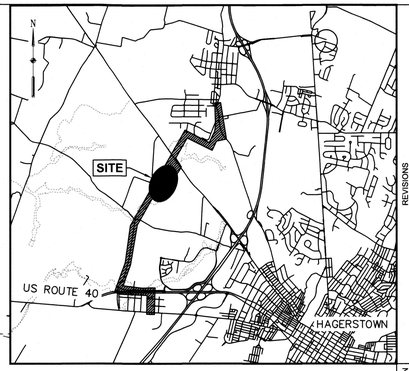


**LOCATION MAP**
1" = 5000'

**STORMWATER MANAGEMENT LEGEND:**

N-3 SHEETFLOW TO CONSERVATION AREA

FLOW PATH

| SOILS TABLE | | | | | |
|---|---|---|---|---|---|
| SYMBOL | SOIL SERIES | SLOPE | HYDRIC | HIGHLY ERODIBLE? | HYDROLOGIC CLASSIFICATION |
| ME | MELVIN SILT LOAM | 0-3% | YES | YES | D |
| HaB | HAGERSTOWN SILT LOAM | 3-8% | NO | MEDIUM | B |
| HbC | HAGERSTOWN SILTY CLAY LOAM | 8-15% | NO | MEDIUM | B |
| HcC | HAGERSTOWN -ROCK OUTCROP COMPLEX | 8-15% | NO | MEDIUM | D |
| SpA | SWANPOND SILT LOAM | 0-3% | NO | MEDIUM | D |
| Fa | FAIRPLAY SILT LOAM | 0-3% | YES | NO | A/D |

NOTES:

1. PROPOSED STORMWATER MANAGEMENT VIA N-3 SHEETFLOW TO CONSERVATION AREA.
2. FLOODPLAIN SHOWN IN THIS AREA IN ACCORDANCE WITH NFIP FEMA MAP NUMBER 24043C0110D PANEL 110 OF 470, EFFECTIVE 15 AUGUST 2017.
3. NATIONAL WETLAND INVENTORY MAP WETLANDS NOT LOCATED IN THIS AREA.
4. REGULAR INSPECTIONS SHALL BE MADE DURING THE FOLLOWING STAGES OF CONSTRUCTION:
   - *O DURING INITIAL GRADING OPERATIONS TO ENSURE THAT BUFFERS ARE CLEARLY MARKED IN THE FIELD.*
   - *O BEFORE USE AND OCCUPANCY APPROVAL TO VERIFY AREA MEASUREMENTS AND ENSURE THAT PERMANENT STABILIZATION HAS BEEN ESTABLISHED.*
5. CONSERVATION AREAS SHALL REMAIN UNMANAGED OTHER THAN ROUTINE DEBRIS REMOVAL AND REPAIRING AREAS OF CONCENTRATED FLOW. INVASIVE AND NOXIOUS PLANT REMOVAL AND BI-ANNUAL MOWING FOR MEADOW AREAS MAY BE NEEDED. SIGNS SHOULD BE MAINTAINED AND SUPPLEMENTAL PLANTINGS PERFORMED AS NEEDED.

*Site Information:*
Location: Washington County, Maryland
Soil Types: HSG D
Project Limit of Disturbance (LOD): 557,568 SF
New Impervious Area at New Regional Pump Station: 13,709 SF
Impervious Area Requiring Treatment (iART) = 13,709 SF

*Calculation of $ESD_V$:*

$\%I = 13{,}709\ SF / 557{,}568\ SF = 3\%$
Use $\%I = 5\%$

Applying the calculated %I to Table 5.3 in the Maryland Stormwater Design Manual, the target $P_E$ is 1.0 inch (in.) for HSG D.

$ESD_V = (P_E)(R_V)(A)/12$, where:
$P_E = 1.0$ in.
$A = 557{,}568$ SF

$R_V = 0.05 + (0.009)(\%I)$; $\%I = 100\%$
$R_V = 0.05 + (0.009)(5\%) = 0.095$

$ESD_{V\ Required} = (1.0\ in)(0.095)(557{,}568)/12$
$ESD_V = 4{,}414\ ft^3$
$ESD_{V\ Provided} = (1.0\ in)(0.95)(13{,}709\ SF)/12$
$ESD_V = 6{,}511\ ft^3$

| Summary | |
|---|---|
| **ESDv Required (CF)** | **ESDv Provided (CF)** |
| 4,414 | 6,511 |

0 25 50 100
GRAPHIC SCALE IN FEET

SWM SHEET 2 OF 2

| NO. | DATE | BY | DESCRIPTION |
|---|---|---|---|
| | | | REVISIONS |

DESIGN INFORMATION
DESIGNED BY: RCI/SMD
DRAWN BY: SMB/CAG/JRG
CHECKED BY: SMD
PROJECT MANAGER: RCI

SEAL

PROFESSIONAL CERTIFICATION. I HEREBY CERTIFY THAT THESE DOCUMENTS WERE PREPARED OR APPROVED BY ME, AND THAT I AM A DULY LICENSED PROFESSIONAL ENGINEER UNDER THE LAWS OF THE STATE OF MARYLAND, LICENSE NO. 15453 EXPIRATION DATE: 7/02/2023

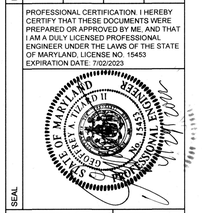


WASHINGTON COUNTY DEPARTMENT OF ENGINEERING SERVICES
16232 ELLIOTT PARKWAY
WILLIAMSPORT, MD 21795
WASHINGTON COUNTY, MARYLAND

STORM WATER MANAGEMENT PLAN & DETAILS

EA Engineering, Science, and Technology, Inc., PBC
Hunt Valley Center
225 Schilling Circle, Suite 400
Hunt Valley, Maryland 21031
(410) 584-7000

DATE: APRIL 2022
PROJECT NUMBER: 1556701

**C-515**
SHEET: 48 OF 76

SP-21-025 / SWCP-21-020

FILE PATH: \\LOVETONCAD\CAD\PROJECTS\1556701 - WASHINGTON CO. FMCAD\PRODUCTION\DESIGN SET\1556701 - SWM.DWG [C-515] PERRY, JEFF 4/29/2022 2:48 PM

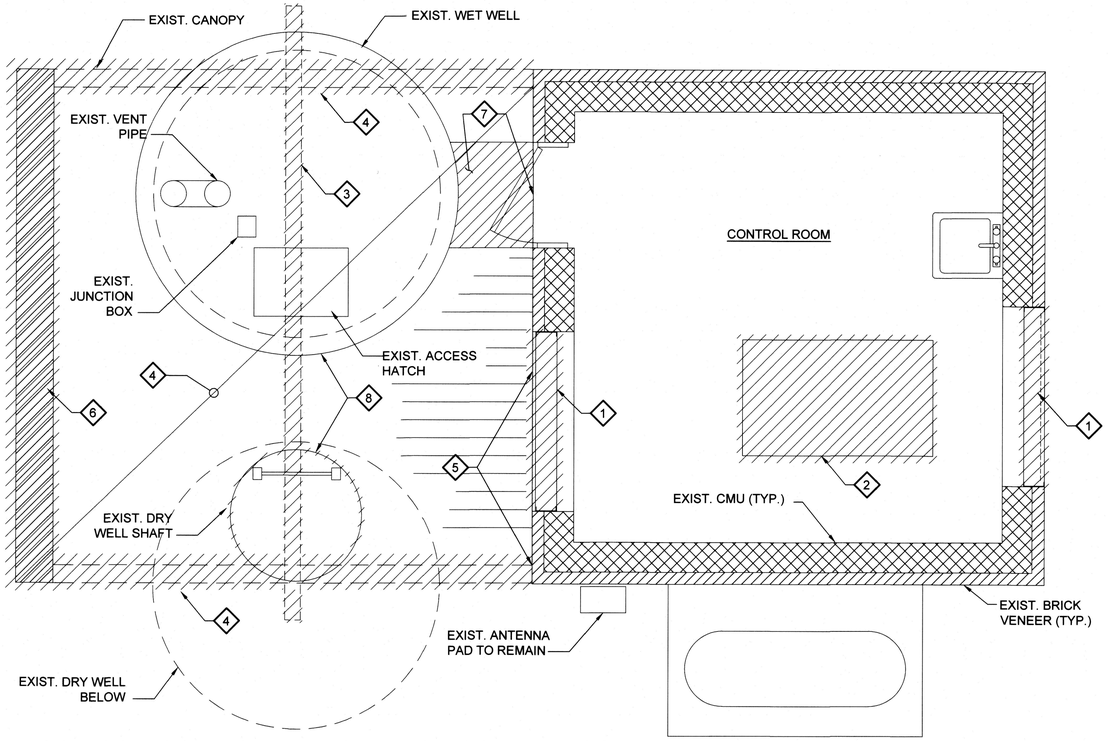


## PUMP STATION - DEMOLITION PLAN

SCALE: 1/2" = 1'-0"

### DEMOLITION NOTES (X):

1. REMOVE EXISTING WALL LOUVER AND PREPARE FOR NEW MASONRY INFILL.
2. REMOVE EXISTING GENERATOR PAD. REPAIR FLOOR WITH EPOXY GROUT TO MATCH ADJOINING FLOOR SURFACES.
3. REMOVE EXISTING MONORAIL SUPPORT BEAM FROM CANOPY ROOF FRAMING ABOVE.
4. CUT EXISTING CANOPY ROOFING FASCIA AND DECK TO LEFT OF CONTROL ROOM ROOF AS SHOWN AND LEAVE ROOF JOISTS AND OTHER STRUCTURAL FRAMING.
5. CUT EXISTING JOISTS AND OTHER FRAMING RESTING ON CONTROL ROOM WALL, FLUSH WITH FACE OF WALL AND REMOVE.
6. REMOVE EXISTING MASONRY WALL INCLUDING FOOTING WHICH WAS SUPPORTING CANOPY.
7. SAW CUT EXISTING CONCRETE WALK WAY SLAB AT LINE OF FACE OF WALL/DOOR AND REMOVE TO SUBGRADE.
8. REMOVE EXISTING CONCRETE TOP SLAB OF WET WELL INCLUDING ALL CONNECTED ITEMS TO THE SLAB. COORDINATE DEMOLITION/REMOVAL OF WET WELL SLAB AND DRY WELL SHAFT INCLUDING LADDER WITH DWG. S-101.

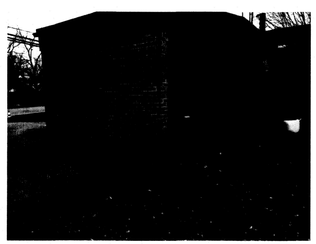

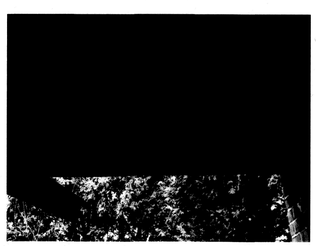

## EXISTING CONDITIONS

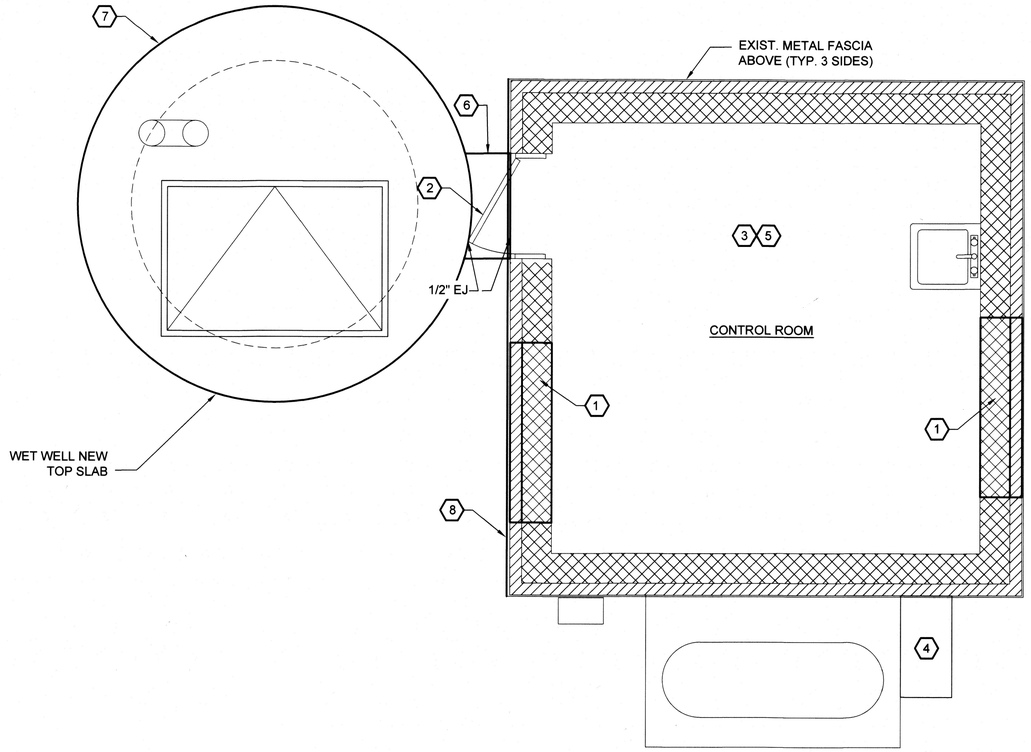


## PUMP STATION - ARCHITECTURAL NEW WORK PLAN

SCALE: 1/2" = 1'-0"

### NEW WORK NOTES (X):

1. CLOSE EXISTING OPENING WITH MATCHING CMU AND MATCHING BRICK VENEER TO MATCH EXISTING BUILDING EXTERIOR.
2. PREPARE/ SAND AND PAINT EXISTING DOOR AND FRAME.
3. PAINT ALL NEW AND EXISTING EXPOSED CMU WALLS.
4. PROVIDE 5" THICK HOUSEKEEPING CONCRETE PAD FOR AIR CONDITIONING UNIT. SEE DETAIL THIS SHEET.
5. PAINT EXISTING CONCRETE PLANK CEILING.
6. PROVIDE 5" THICK CONCRETE SLAB BETWEEN WET WELL AND CONTROL ROOM AS SHOWN, SEE DETAIL THIS SHEET.
7. FOR WET WELL TOP SLAB AND ACCESSORIES SEE DWG. S-102.
8. PATCH ANY VOIDS/HOLES AROUND CANOPY ROOF FRAMING PORTIONS LEFT IN THE WALL. PROVIDE NEW METAL FASCIA, MATCHING EXISTING ON OTHER THREE SIDES OF CONTROL ROOM, TO COVER REMAINING FRAME EMBEDS IN THE WALL.

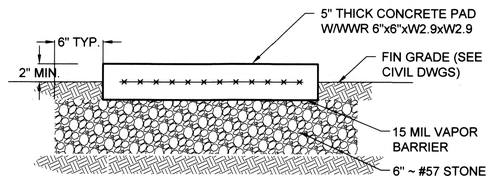


## CONCRETE PAD/SLAB

NOT TO SCALE

GRAPHIC SCALE

0 1' 2' 4'

SCALE: 1/2" = 1'-0"

REVISIONS

| NO. | DATE | BY | DESCRIPTION |
|---|---|---|---|
| | | | |

DESIGN INFORMATION

| DESIGNED BY: | DRAWN BY: | CHECKED BY: | PROJECT MANAGER: |
|---|---|---|---|
| KK | VL | GD | AM |

PROFESSIONAL CERTIFICATION. I HEREBY CERTIFY THAT THESE DOCUMENTS WERE PREPARED OR APPROVED BY ME, AND THAT I AM A DULY LICENSED PROFESSIONAL ENGINEER UNDER THE LAWS OF THE STATE OF MARYLAND, LICENSE NO. 8050 EXPIRATION DATE: 08/19/2023

SEAL:

WASHINGTON COUNTY DEPARTMENT OF ENGINEERING SERVICES
16232 ELLIOTT PARKWAY
WILLIAMSPORT, MD 21795
WASHINGTON COUNTY, MARYLAND

FARM LANE PUMP STATION
ARCHITECTURAL DEMOLITION AND NEW WORK PLAN

EA Engineering, Science, and Technology, Inc., PBC
Hunt Valley Center
225 Schilling Circle, Suite 400
Hunt Valley, Maryland 21031
(410) 584-7000

DHILLON ENGINEERING INC.
10902 Reisterstown Rd, Suite 204
Owings Mills, Maryland 21117
(410) 356-1095

DATE: APRIL 2022

PROJECT NUMBER: 1556701

A-101

SHEET: 49 OF 76

SP-21-025 / SWCP-21-020

FILE PATH: Z:\PROJECTS\EA\WASH COUNTY THREE PUMP STATIONS\DRAWINGS\BASE\1556701_TB 2020.DWG [MODEL] OF ELIA MAZILU 5/17/2019 3:38 PM

# STRUCTURAL AND MISCELLANEOUS STEEL NOTES:

## GENERAL NOTES:

1. THE SIZES AND LOCATIONS OF EQUIPMENT PADS AND PEDESTALS ARE DEPENDENT UPON THE ACTUAL EQUIPMENT FURNISHED. IT SHALL BE THE CONTRACTOR'S RESPONSIBILITY TO VERIFY AND COORDINATE ALL SUCH ITEMS. NO DIMENSIONS INDICATED ON THESE DRAWINGS SHALL BE ALTERED WITHOUT THE ENGINEER'S APPROVAL. ALL EQUIPMENT PADS OR OTHER EQUIPMENT SUPPORTS REQUIRED MAY NOT HAVE BEEN SHOWN ON THE STRUCTURAL DRAWINGS. REFER TO THE MECHANICAL AND ELECTRICAL DRAWINGS FOR SIZES AND LOCATIONS OF SUCH PADS AND SUPPORTS.
2. ALL EXPOSED HARDWARE (NUTS, BOLTS, WASHERS, EXPANSION BOLTS, ANCHOR BOLTS, ETC.) USED IN PROCESS AREA SHALL BE SERIES 300 TYPE 316 STAINLESS STEEL UON.
3. WORK ALL OTHER NOTES AND DIMENSIONS OF PROJECT DRAWINGS WITH THESE NOTES.
4. DO NOT SCALE THE DRAWINGS, WRITTEN DIMENSIONS CONTROL.
5. ALL CONSTRUCTION WORK SHALL BE IN ACCORDANCE WITH OCCUPATIONAL SAFETY LAW, MOSHA AND OSHA REQUIREMENTS.
6. DESIGN SOIL BEARING CAPACITY IS 2000 PSF FOR FOOTINGS, ALL STRUCTURAL FILL/SUBGRADE AREAS SHALL BE PROOF ROLLED TO ACHIEVE SPECIFIED DENSITY.
7. NO ASBESTOS CONTAINING MATERIAL AND/OR LEAD BASED PAINT SHALL BE USED IN THIS PROJECT AND THE CONTRACTOR SHALL GIVE A CERTIFICATE TO THIS EFFECT.
8. WALL DOWELS TO MATCH VERTICAL REINFORCEMENT UON.
9. ALL EXPOSED STEEL SHALL RECEIVE A PRIMER COAT AND (2) COATS OF EXTERIOR GRADE FINISH PAINT.
10. STRIP EXISTING TOP SOIL AND STOCK PILE SEPARATELY, AFTER EXCAVATING TO PROPOSED SUBGRADE DEPTH, AND FOR 5 FEET BEYOND THE STRUCTURE FOOTPRINT, PROOF ROLL WHOLE BUILDING AREA UNDER OBSERVATION OF GEOTECHNICAL ENGINEER.

## FOUNDATION NOTES:

1. FOR MECHANICAL AND ELECTRICAL WORK TO BE INCORPORATED IN FOUNDATION WORK, SEE MECH AND ELEC DWGS.
2. ALL EXCAVATION SHALL BE KEPT DRY. STANDING WATER SHALL NOT BE ALLOWED IN EXCAVATIONS.
3. BEFORE PLACING ANY #57 STONE OR CONCRETE ON SUB GRADE, THE CONTRACTOR SHALL NOTIFY THE ENGINEER.
4. A SIX INCH (MIN.) LAYER OF #57 STONE SHALL BE PROVIDED UNDER ALL STRUCTURES, UON.
5. FOUNDATIONS SHALL BE 3'-0" MIN. DEPTH. BELOW ADJOINING FINISHED GRADE AND 12" MIN. INTO SOUND EXISTING UNDISTURBED SOIL.

## CONCRETE NOTES:

1. ALL CONCRETE SHALL HAVE A MINIMUM COMPRESSIVE STRENGTH OF 4500 PSI AT 28 DAYS, TO COMPLY WITH SHA STANDARD SPECIFICATIONS.
2. REINFORCED CONCRETE SHALL BE DETAILED AND CONSTRUCTED IN ACCORDANCE WITH AMERICAN CONCRETE INSTITUTE, (ACI 301-16) "SPECIFICATION FOR STRUCTURAL CONCRETE".
3. ALL REINFORCEMENT SHALL CONFORM TO ASTM SPECIFICATION "A615/A615M-O5A STANDARD SPECIFICATION FOR DEFORMED AND PLAIN CARBON STEEL BARS GRADE 60 FOR CONCRETE REINFORCEMENT".
4. WELDED WIRE REINFORCING SHALL CONFORM TO ASTM SPECIFICATION "A1064 STANDARD SPECIFICATION FOR STEEL WELDED WIRE REINFORCEMENT, PLAIN, FOR CONCRETE". MINIMUM LAP AND EMBEDMENT TO BE GREATER OF ONE CROSS WIRE SPACING PLUS 2" OR 6".
5. UNLESS OTHERWISE NOTED ON THE DRAWINGS, CONCRETE COVER FOR REINFORCEMENT SHALL BE AS FOLLOWS:
   A. UNFORMED CONCRETE BOTTOM BARS IN FOOTINGS AND SLABS ON EARTH, OR STONE .....3"
   B. BEAMS, SLABS, COLUMNS AND WALLS EXPOSED TO GROUND, WEATHER AFTER THE REMOVAL OF FORM ...2"
6. ALL EXPOSED CONCRETE EDGES SHALL BE CHAMFERED 3/4" UON.
7. THE CONTRACTOR SHALL SUBMIT SHOP DETAILS OF REINFORCING STEEL BEFORE PROCEEDING WITH FABRICATION.
8. ALL SPLICES FOR REINFORCING BARS NOT DIMENSIONED ON THE DRAWINGS SHALL BE DETAILED AS TABULATED ON THIS DWG.
9. CONSTRUCTION JOINTS (CNJ) IF REQUIRED BY CONTRACTOR SHALL BE AS DETAILED ON THE DRAWINGS.
10. ANCHOR BOLTS AND EQUIPMENT PEDESTALS SHALL BE SIZED AND LOCATED AS REQUIRED TO SUIT EQUIPMENT FURNISHED.
11. COORDINATE WITH CIVIL, MECHANICAL AND ELECTRICAL DRAWINGS FOR ALL EMBEDDED ITEMS SUCH AS SLEEVES, ANCHORS, ELECTRICAL CONDUITS, OPENINGS AND LIFTING HOOKS, WHICH MAY INTERFERE WITH CONCRETE CONSTRUCTION. ALL PIPING AND OTHER EMBEDDED ITEMS ARE NOT SHOWN ON STRUCTURAL DRAWINGS.
12. PROVIDE CONTROL JOINT (CJ) TO DIVIDE CONCRETE SLAB INTO 400 SF +/- AND LENGTH TO WIDTH RATIO NOT TO EXCEED 2, UON.
13. PROVIDE BONDING AGENT AT ALL LOCATIONS IN WHICH FRESH CONCRETE COMES INTO CONTACT WITH CURED CONCRETE. BONDING AGENT SHALL BE APPLIED TO CURED CONCRETE JUST BEFORE FRESH CONCRETE IS POURED.

## CONCRETE MASONRY:

1. MASONRY CONSTRUCTION SHALL CONFORM TO AMERICAN CONCRETE INSTITUTE (ACI 530.1-13) "SPECIFICATION FOR CONCRETE MASONRY CONSTRUCTION".
2. ALL CONCRETE MASONRY UNITS SHALL BE HOLLOW LIGHTWEIGHT, LOAD BEARING UNITS MEETING THE REQUIREMENTS OF ASTM C90 WITH 3000PSI, Fm=1350 PSI STRENGTH.
3. MORTAR SHALL MEET THE REQUIREMENTS OF ASTM C270 TYPE S, Fm=1800 PSI. CEMENT SHALL BE PORTLAND CEMENT.
4. GROUT SHALL MEET THE REQUIREMENTS OF ASTM C476 COARSE GROUT, AND SHALL REACH A MINIMUM COMPRESSIVE STRENGTH OF 2000 POUNDS PER SQUARE INCH AT 28 DAYS.
5. PROVIDE CONTINUOUS LADDER-TYPE HORIZONTAL JOINT REINFORCING, GALV. 9 GA., AT 16" O.C. VERTICALLY. WHEN FILLING BIG OPENING IN EXISTING MASONRY, ANCHOR TO SIDES OF EXISTING MASONRY.
6. PROVIDE MASONRY ANCHORS AT 16" O.C. (VERTICALLY AND HORIZONTALLY) SET IN COURSING AND ATTACHED TO BRICK VENEER.

1. FABRICATIONS AND ERECTION OF ALL STRUCTURAL AND MISCELLANEOUS STEEL SHALL CONFORM WITH THE AMERICAN INSTITUTE OF STEEL CONSTRUCTION. (AISC) "MANUAL OF STEEL CONSTRUCTION". FOURTEENTH EDITION 2011.
2. THE CONTRACTOR SHALL SUBMIT ERECTION PLANS AND SHOP DETAILS FOR REVIEW AND SHALL NOT PROCEED WITH FABRICATION PRIOR TO RECEIVING APPROVAL.
3. PROVIDE STRUCTURAL STEEL WIDE-FLANGE SHAPES CONFORMING TO ASTM A992, HSS MEMBER CONFORMING TO ASTM A500, PIPE MEMBER CONFORMING TO ASTM A53, AND ALL OTHER MEMBERS CONFORMING TO ASTM A36.
4. ANCHOR BOLTS (A.B.) SHALL COMPLY WITH ASTM A307.
5. HIGH STRENGTH BOLTS (H.S.) SHALL COMPLY WITH ASTM A325.
6. ALL WELDING SHALL COMPLY WITH AMERICAN WELDING SOCIETY, (AWS D1.1) "STRUCTURAL WELDING CODE" 2006.
7. ALL SHOP CONNECTIONS SHALL BE WELDED WITH CLASS E-70 SERIES ELECTRODES. FIELD CONNECTIONS SHALL BE HIGH STRENGTH BOLTED EXCEPT WHERE OTHERWISE NOTED.
8. ALL STRUCTURAL/MISCELLANEOUS STEEL AND ACCESSORIES SHALL RECEIVE ONE COAT OF SHOP APPLIED PRIMER, THAT MUST BE BY THE SAME COATING MANUFACTURER AS THE FINISH COAT(S) AND MUST BE COMPATIBLE WITH THE FINISH COAT(S). STEEL TO BE EMBEDDED IN CONCRETE SHALL NOT BE SHOP PAINTED.
9. ALL SHOP AND FIELD WELDED CONNECTIONS SHALL BE CLEANED (WIRE BRUSHED) AND TOUCHED UP WITH PRIMER TO MATCH THE OTHER PRIMER.

## ALUMINUM NOTES:

1. ALL STRUCTURAL AND MISCELLANEOUS ALUMINUM IS DESIGNED AND SHALL BE FABRICATED IN ACCORDANCE WITH THE CURRENT SPECIFICATION OF THE ALUMINUM ASSOCIATION.
2. ALL STRUCTURAL ALUMINUM SHALL BE ALLOY 6061-T6.
3. ALL ALUMINUM SURFACES IN CONTACT WITH CONCRETE AND DISSIMILAR METALS SHALL, BEFORE ERECTION, BE HEAVILY COATED WITH BITUMASTIC OR AS SPECIFIED.
4. ALL ALUMINUM GRATING SHALL BE CAPABLE OF SUPPORTING A LIVE LOAD OF 150 PSF.
5. ALL OUTSIDE EDGES OF GRATING AND OPENINGS IN GRATING SHALL BE BANDED.
6. FOR OTHER MISCELLANEOUS METALS SEE STANDARD SPECIFICATIONS.

## CODES:

1. INTERNATIONAL BUILDING CODE 2018 EDITION.
2. AMERICAN CONCRETE INSTITUTE, (ACI-318-14) "BUILDING CODE REQUIREMENTS FOR STRUCTURE CONCRETE AND COMMENTARY".
3. STEEL CONSTRUCTION MANUAL, 15TH EDITION, AMERICAN INSTITUTE OF STEEL CONSTRUCTION INCLUDING SPECIFICATIONS FOR STRUCTURAL STEEL BUILDINGS (ANSI 360-10), SPECIFICATION FOR STRUCTURAL JOINTS USING ASTM A-325 OF A490 BOLTS, AND AISC CODE STANDARD PRACTICE).
4. STRUCTURAL WELDING CODE ANSI/AWS D1.1-15, AMERICAN WELDING SOCIETY, LATEST EDITION.
5. ASCE 7-16: MINIMUM DESIGN LOADS AND ASSOCIATED CRITERIA FOR BUILDINGS AND OTHER STRUCTURES.

## NOTES FOR PRE-ENGINEERED STRUCTURES CONTRACTOR:

1. THE SUPERSTRUCTURE INCLUDING LATERAL FORCE RESISTING SYSTEM, ROOF, STEEL SUPPORT SKID ETC. SHALL BE DESIGNED AND SEALED BY A PROFESSIONAL ENGINEER REGISTERED IN MARYLAND.
2. IT IS DESIGNED, FABRICATED, AND ERECTED IN ACCORDANCE WITH FOLLOWING LOADS, AND LISTED CODES.
3. SUPERSTRUCTURE SHOWN IN CONTRACT DRAWINGS IS FOR REFERENCE ONLY. IT IS CONTRACTOR'S CHOICE AND RESPONSIBILITY TO USE THE APPROPRIATE MATERIALS AND LATERAL FORCE RESISTING SYSTEM SUITABLE FOR THIS PROJECT.

## LOADS:

1. DEAD LOADS - ACTUAL WEIGHT OF STRUCTURE.
2. LIVE LOADS - FLOOR - 250 PSF IN AREAS NOT OCCUPIED BY EQUIPMENT.
   - EQUIPMENT - ACTUAL WEIGHT OR 300 PSF;
   - WALKWAYS AND CATWALKS - 150 PSF;
   - STAIRS 100 PSF.
   - ROOF LIVE LOAD - 30 PSF.
3. SEISMIC LOAD:
   A) RISK CATEGORY: III
   B) MAXIMUM EARTHQUAKE SPECTRAL RESPONSE ACCELERATION, SHORT PERIODS: SS=0.12g
   C) MAXIMUM EARTHQUAKE SPECTRAL RESPONSE ACCELERATION, ONE SECOND: S1 =0.042g
   D) SITE CLASSIFICATION: D
   E) SITE SEISMIC COEFFICIENTS: FA=1.6, FV=2.4
   F) SPECTRAL RESPONSE COEFFICIENTS: Sds=0.128 Sd1=0.067g
   G) SEISMIC DESIGN CATEGORY: A
   H) SEISMIC IMPORTANCE FACTOR (I): 1.25
   I) SEISMIC FORCE - RESISTING SYSTEM: DELEGATED DESIGN
   J) RESPONSE MODIFICATION COEFFICIENT: (R)=DELEGATED DESIGN
   K) SEISMIC RESPONSE COEFFICIENT: (Cs)=DELEGATED DESIGN
   L) ANALYTICAL PROCEDURE = DELEGATED DESIGN
   M) DESIGN BASE SHEAR: DELEGATED DESIGN.
4. WIND LOAD:
   I. ULTIMATE DESIGN WIND SPEED Vult = 120 MPH
   II. NOMINAL DESIGN WIND SPEED Vasd = 93 MPH
   III. EXPOSURE CATEGORY: C
   IV. RISK CATEGORY: III
   V. INTERNAL PRESSURE COEFFICIENT: GCPI = ±0.18 FOR ENCLOSED BUILDINGS
5. SNOW LOAD:
   I. GROUND SNOW LOAD PG = 30 PSF
   II. SNOW EXPOSURE FACTOR CE = 1.0
   III. SNOW IMPORTANCE FACTOR Is = 1.10
   IV. THERMAL FACTOR CT = 1.0 FOR HEATED STRUCTURES CT = 1.2 FOR UNHEATED STRUCTURES
   V. FLAT ROOF SNOW LOAD
      Pf = 23.1 PSF + UNBALANCED DRIFTING, & SLIDING SNOW WHERE APPLICABLE FOR HEATED STRUCTURES.
      PF = 27.7 PSF + UNBALANCED DRIFTING, & SLIDING SNOW WHERE APPLICABLE FOR UNHEATED STRUCTURES.
   VI. MAX. INTENSITY OF DRIFT SURCHARGE LOAD = 17.9 PSF
      W = WIDTH OF SNOW DRIFT = 4.0 FT

ALL APPLICABLE CODE FACTORS PER ASCE 7-16 SHALL BE USED FOR CALCULATION OF SNOW LOADS OF PRE-ENGINEERED STRUCTURES.

## ABBREVIATIONS:

| | |
|---|---|
| & | AND |
| @ | AT |
| Ø, DIA | DIAMETER |
| AB | ANCHOR BOLT |
| ADDNL | ADDITIONAL |
| AFF | ABOVE FINISHED FLOOR |
| ALUM | ALUM |
| APPROX | APPROXIMATELY |
| ARCH | ARCHITECTURAL |
| BE | BOTH ENDS |
| BLDG | BUILDING |
| BM | BEAM |
| BOT | BOTTOM |
| BPL | BEARING PLATE |
| C/C | CENTER TO CENTER |
| ℄ | CENTERLINE |
| CJ | CONTROL JOINT |
| CL, CLR | CLEAR, CLEARANCE |
| CMU | CONCRETE MASONRY UNIT |
| CNJ | CONSTRUCTION JOINT |
| CONC | CONCRETE |
| CONT | CONTINUOUS |
| DS | DOWN SPOUT |
| DWG, DWGS | DRAWING(S) |
| EE | EACH END |
| EF | EACH FACE |
| EJ, EXP JT | EXPANSION JOINT |
| EL, ELEV | ELEVATION |
| ELEC | ELECTRICAL |
| EMBD | EMBEDMENT |
| EQ | EQUAL |
| ETC. | ET CETERA |
| EW | EACH WAY |
| EXIST, EX | EXISTING |
| FD | FLOOR DRAIN |
| FE | FIRE EXTINGUISHER |
| FF | FINISH FLOOR |
| FIN GR | FINISHED GRADE |
| FT | FOOT, FEET |
| FTG | FOOTING |
| GA | GAGE |
| GALV | GALVANIZED |
| HORZ | HORIZONTAL |
| LB | POUND |
| MAX | MAXIMUM |
| MECH | MECHANICAL |
| MIN | MINIMUM |
| MO | MASONRY OPENING |
| NTS | NOT TO SCALE |
| OC, O/C | ON CENTER |
| PL | PLATE |
| PSI | POUNDS PER SQUARE INC |
| PSF | POUNDS PER SQUARE FOOT |
| R | RISER |
| REINF | REINFORCING |
| RM | ROOM |
| SCH | SCHEDULE, SCHEDULED |
| SF | SQUARE FEET |
| SS, SST | STAINLESS STEEL |
| STD | STANDARD |
| SQ | SQUARE |
| T&B | TOP AND BOTTOM |
| THK | THICK, THICKNESS |
| THRU | THROUGH |
| TRWD | TREATED WOOD |
| TYP | TYPICAL |
| UON | UNLESS OTHERWISE NOTED |
| V, VERT | VERTICAL |
| VB | VAPOR BARRIER |
| W/ | WITH |
| W/O | WITHOUT |
| WWR | WELDED WIRE REINFORCING |

| LAP SPLICE LENGTH | | | | | | MINIMUM TENSION EMBEDMENTS | | | |
|---|---|---|---|---|---|---|---|---|---|
| BAR SIZE | | SLAB & WALL | | BEAM | | STANDARD 90° HOOK | | STANDARD 180° HOOK | |
| SOFT METRIC | ENGLISH | OTHER BARS | TOP BARS | OTHER BARS | TOP BARS | 1dh | 12db | 1dh | 4db |
| #10 | #3 | 12" | 16" | 14" | 18" | 6" | 5" | 6" | 2 1/2" |
| #13 | #4 | 15" | 20" | 19" | 24" | 7" | 6" | 7" | 2 1/2" |
| #16 | #5 | 20" | 24" | 24" | 30" | 9" | 8" | 9" | 3" |
| #19 | #6 | 22" | 30" | 28" | 36" | 10" | 9" | 10" | 3" |
| #22 | #7 | 37" | 48" | 41" | 53" | 12" | 11" | 12" | 4" |

SLABS & WALL: 6" MINIMUM REBAR SPACING WITH CONCRETE COVER = 1.5" CLEAR

BEAM: MINIMUM CLEAR SPACING BETWEEN BARS = LARGEST OF 1" OR db (BAR DIAMETER) OR (1.33) (MAX. AGGREGATE SIZE) MINIMUM CONCRETE COVER = 1.5" CLEAR

TOP BAR: TOP BAR FOR SLAB AND BEAM SHALL BE DEFINED AS REINFORCEMENT SO PLACED THAT MORE THAN 12" OF CONCRETE IS CAST BELOW THE SPLICE

**TENSION LAP SPLICE AND STANDARD HOOK LENGTH**
(NON-EPOXY COATED)

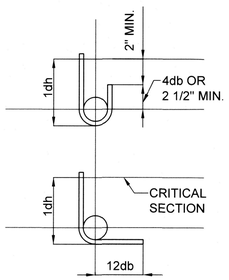


STANDARD HOOKS:
SIDE COVER MORE THAN 2.5"
END COVER (90° HOOK) MORE THAN 2"
MINIMUM COVER TO TAIL = 2"

**STANDARD 180° AND 90° END HOOKS**

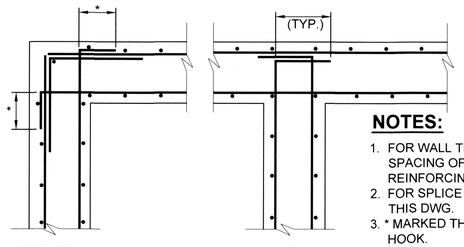


CORNER "T" CONNECTION

**NOTES:**
1. FOR WALL THICKNESS, SIZE AND SPACING OF FOUNDATION REINFORCING SEE PLANS.
2. FOR SPLICE LENGTH SEE TABLE ON THIS DWG.
3. * MARKED THUS SHALL BE 90° STD. HOOK.

**TYP. REINF DETAILS @ FOUNDATION WALL INTERSECTIONS**
NTS

REVISIONS

| NO. | DATE | BY | DESCRIPTION |
|---|---|---|---|

DESIGN INFORMATION: DESIGNED BY: KK | DRAWN BY: VL | CHECKED BY: GD | PROJECT MANAGER: AM

SEAL

PROFESSIONAL CERTIFICATION. I HEREBY CERTIFY THAT THESE DOCUMENTS WERE PREPARED OR APPROVED BY ME, AND THAT I AM A DULY LICENSED PROFESSIONAL ENGINEER UNDER THE LAWS OF THE STATE OF MARYLAND, LICENSE NO. 8050 EXPIRATION DATE: 08/19/2023

STATE OF MARYLAND · GURMEET DHILLON · REGISTERED PROFESSIONAL ENGINEER · NO. 8050

WASHINGTON COUNTY DEPARTMENT OF ENGINEERING SERVICES
16232 ELLIOTT PARKWAY
WILLIAMSPORT, MD 21795
WASHINGTON COUNTY, MARYLAND

STRUCTURAL NOTES


EA Engineering, Science, and Technology, Inc., PBC
Hunt Valley Center
225 Schilling Circle, Suite 400
Hunt Valley, Maryland 21031
(410) 584-7000


DATE: APRIL 2022

PROJECT NUMBER: 1556701

**S-001**
SHEET: 50 OF 76


DHILLON ENGINEERING INC.
10902 Reisterstown Rd, Suite 204
Owings Mills, Maryland 21117
(410) 356-1095


SP-21-025 / SWCP-21-020

FILE PATH: Z:\PROJECTS\EA\13 WASH COUNTY THREE PUMP STATIONS\04 DRAWINGS\PRODUCTION\S-001_002.DWG,[S-001] OFELIA MAZILU 4/20/2022 2:09 PM

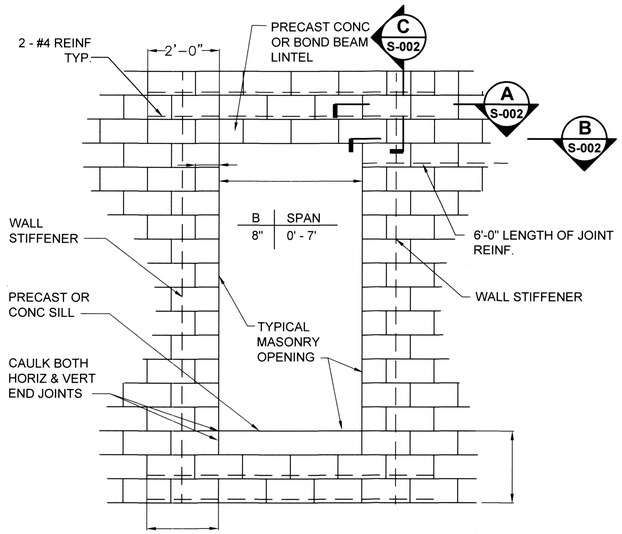


TWO COURSES 2 - #4 REINF BELOW SILL AND ABOVE LINTEL REQD.

## TYPICAL MASONRY OPENINGS - ELEVATION

NOTE: THIS DETAIL APPLIES TO MASONRY OPENINGS WITH WALL STIFFENERS. FILL CELLS WITHIN B DISTANCE OF FACE OF JAMB OR USE SOLID CMU AT JAMB.

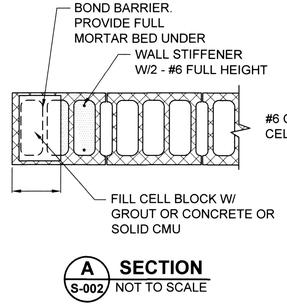


A S-002 **SECTION**
NOT TO SCALE

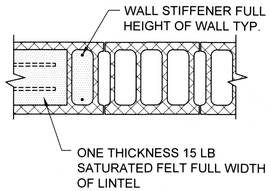


B S-002 **SECTION**
NOT TO SCALE

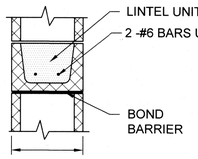


C S-002 **TYP. LINTEL SECTION**
NOT TO SCALE

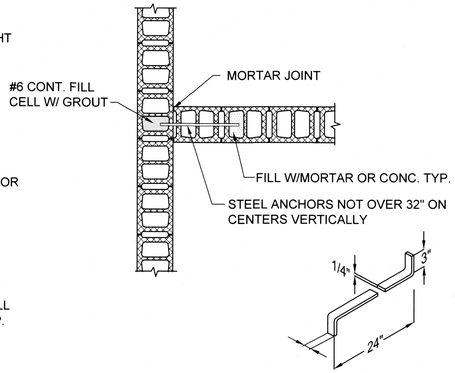


## INTERSECTION OF WALLS OR PARTITIONS

NOT TO SCALE

## NOTES:

1. WALL DIMENSIONS MARKED THUS "*" SHALL BE COORDINATED WITH EQUIPMENT MANUFACTURER.

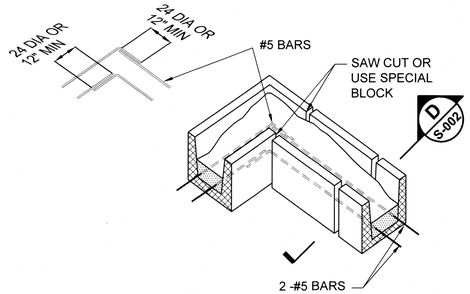


## BOND BEAM UNIT AT CORNER

NOT TO SCALE

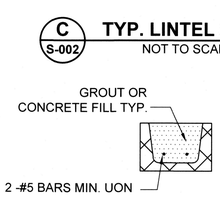


D S-002 **BOND BEAM SECTION**
NOT TO SCALE

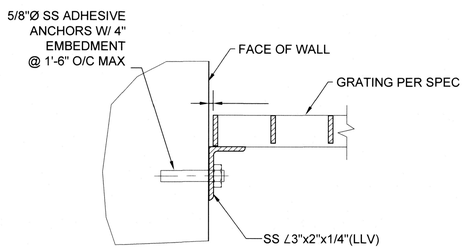


2 S-002 **TYP. DETAIL - WALL ANGLE**
NOT TO SCALE

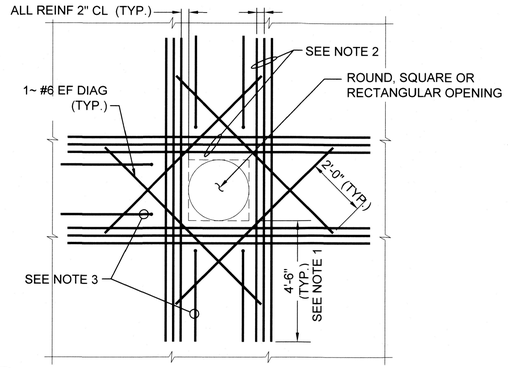


4 S-002 **TYP. ADDNL REINF AROUND OPENINGS**
NOT TO SCALE

## NOTES:

1. EXTEND ADDITIONAL REINFORCING BEYOND EDGE OF OPENING AS SHOWN ABOVE. ADDITIONAL BARS MAY TERMINATE AT THE END OF THE WALL WITH A STANDARD 90° HOOK WHERE THE LENGTH OF THE WALL WILL NOT PERMIT BARS TO EXTEND AS SHOWN.
2. PROVIDE ADDITIONAL REINFORCING, (MINIMUM OF ONE-HALF THE NUMBER OF REINFORCING BARS INTERRUPTED BY THE OPENING) ON EACH SIDE AND EACH FACE OF THE OPENING.
3. TYPICAL WALL OR SLAB REINFORCING NOT COMPLETELY SHOWN FOR CLARITY. TERMINATE TYPICAL REINFORCING 2" CLEAR TO OPENING WITH STANDARD 90° HOOKS.

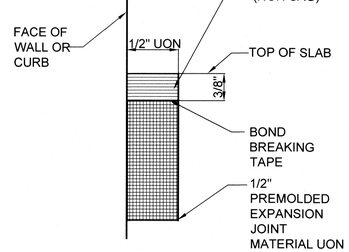


5 S-002 **TYP. DETAIL EXP. JOINT (EJ)**
NOT TO SCALE

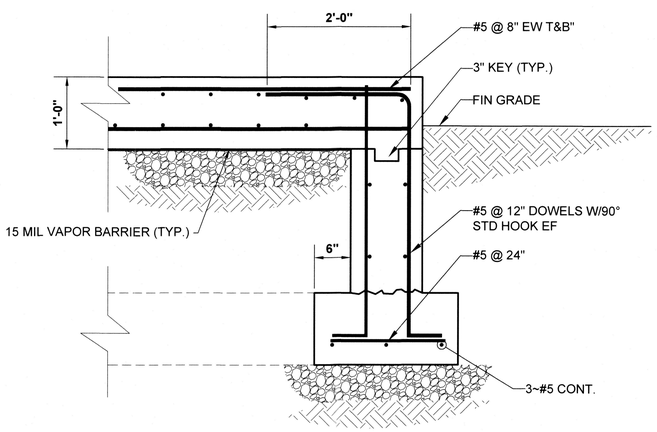


1 S-002 **TYP. DETAIL - FOOTER**
SCALE: 1" = 1'-0"

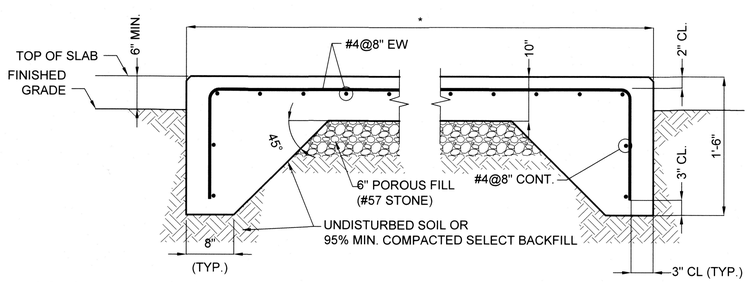


3 S-002 **EXTERIOR SLAB / EQUIPMENT PAD DETAIL**
NOT TO SCALE

## NOTE:

* CONTRACTOR TO COORDINATE THE SIZE OF CONC. PAD WITH THE EQUIPMENT SUPPLIER. PAD TO BE 4" MIN. LARGER THAN SUPPLIED EQUIPMENT ON ALL SIDES.

REVISIONS

| NO. | DATE | BY | DESCRIPTION |
|---|---|---|---|

DESIGN INFORMATION

| DESIGNED BY: | DRAWN BY: | CHECKED BY: | PROJECT MANAGER |
|---|---|---|---|
| KK | VL | GD | AM |

PROFESSIONAL CERTIFICATION. I HEREBY CERTIFY THAT THESE DOCUMENTS WERE PREPARED OR APPROVED BY ME, AND THAT I AM A DULY LICENSED PROFESSIONAL ENGINEER UNDER THE LAWS OF THE STATE OF MARYLAND. LICENSE NO. 8050 EXPIRATION DATE: 08/19/2023

SEAL

STATE OF MARYLAND · GURMEET S. DHILLON · REG. NO. 8050 · PROFESSIONAL ENGINEER · 2022

WASHINGTON COUNTY DEPARTMENT OF ENGINEERING SERVICES
16232 ELLIOTT PARKWAY
WILLIAMSPORT, MD 21795
WASHINGTON COUNTY, MARYLAND

STRUCTURAL DETAILS


EA Engineering, Science, and Technology, Inc., PBC
Hunt Valley Center
225 Schilling Circle, Suite 400
Hunt Valley, Maryland 21031
(410) 584-7000

DHILLON ENGINEERING INC.
10902 Reisterstown Rd, Suite 204
Owings Mills, Maryland 21117
(410) 356-1095


DATE: APRIL 2022

PROJECT NUMBER: 1556701

S-002
SHEET: 51 OF 76

SP-21-025 / SWCP-21-020

FILE PATH: Z:\PROJECTS\EA\19 WASH COUNTY THREE PUMP STATIONS\04 DRAWINGS\PRODUCTIONS\001_002 DWG\S-002.DFE,LIA MAZILLI 4/29/2022 2:05 PM

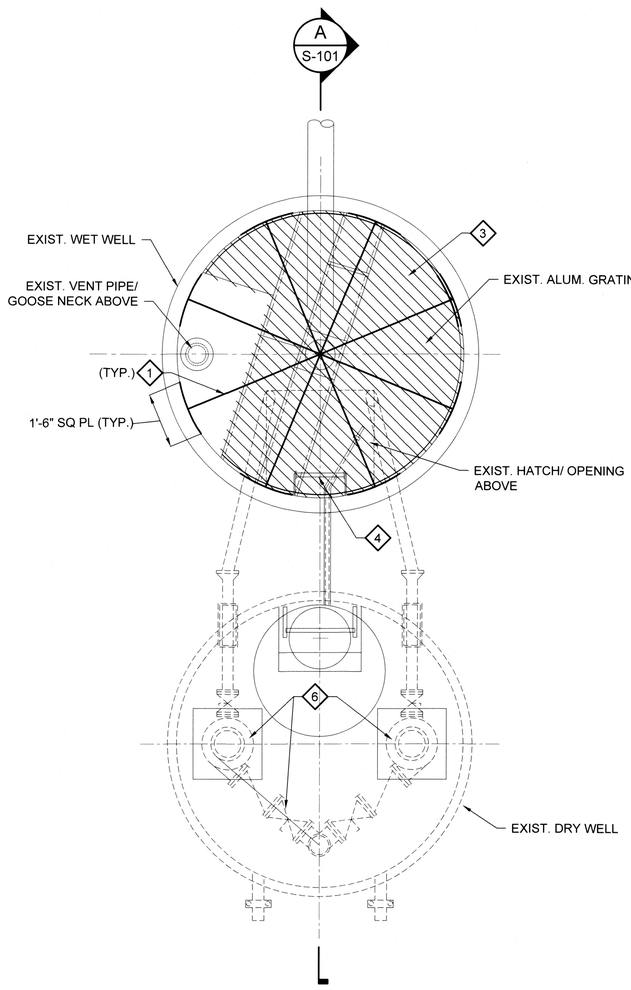


## WET WELL AND DRY WELL DEMOLITION PLANS

SCALE: 1/2" = 1'-0"

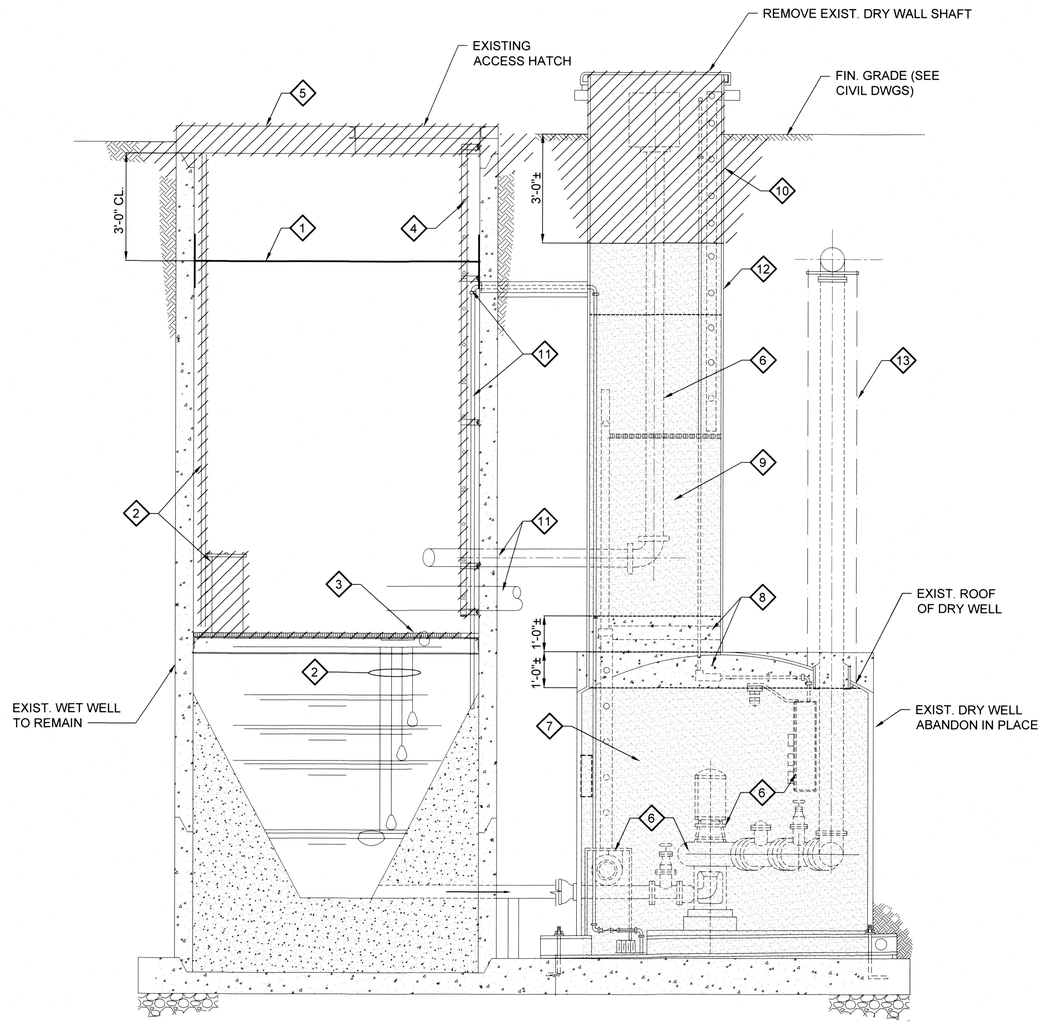


## A S-101 SECTION

SCALE: 1/2" = 1'-0"

### DEMOLITION NOTES (X)

1. PROVIDE FOUR (4) STRUTS W/CURVED END 18"x18"x1/2" MIN. THICK STEEL PLATES (SNUG TIGHT) TO SUPPORT EXISTING CONCRETE SHAFT/WALL BEFORE REMOVING TOP SLAB OF WET WELL. CONTRACTOR TO DESIGN THE TYPE AND SIZE OF STRUTS AND SUBMIT FOR APPROVAL BY THE ENGINEER. REMOVE THESE TEMPORARY STRUTS AFTER INSTALLING NEW CONCRETE TOP SLAB AS SHOWN ON DWG. S-102.
2. REMOVE EXISTING COMMUNITOR, FLOATS, GUIDE RAILS AND ALL OTHER EQUIPMENT, ACCESSORIES, ETC. FROM THE WET WELL.
3. REMOVE EXISTING ALUM. GRATING, STRUCTURAL SUPPORT FRAMING, CIRCUMFERENTIAL SUPPORT ANGLE, ANCHORS, ETC., CUT ANCHORS 1/2" MIN. DEEP AND EPOXY GROUT PATCH FLUSH WITH CONCRETE SURFACE.
4. REMOVE EXISTING LADDER. CUT ANCHORS 1/2" MIN. DEEP AND EPOXY GROUT PATCH FLUSH WITH CONCRETE SURFACE.
5. EXCAVATE EXISTING GRADE AS NEEDED TO DEMOLISH/REMOVE EXISTING TOP SLAB INCLUDING HATCH, PIPES, ETC AS SHOWN ON SHEET A-101.
6. REMOVE ALL EXISTING MECHANICAL AND ELECTRICAL EQUIPMENT, ENCLOSURES, PIPES, PANELS, ETC. (COORDINATE WITH MECHANICAL AND ELECTRICAL DRAWINGS).
7. FILL DRY WELL WITH SAND UP TO 1'-0"± BELOW ROOF AS SHOWN.
8. FILL TOP SPACE OF DRY WELL ABOVE SAND AND BELOW ROOF AND 1'-0"± INTO THE SHAFT WITH LEAN CEMENT, SAND AND WATER SLURRY AS SHOWN.
9. FILL UPPER PORTION OF SHAFT WITH SAND TO 3'-0" BELOW GRADE AS SHOWN.
10. EXCAVATE AS NEEDED TO CUT AND REMOVE EXISTING DRY WELL SHAFT TO 3'-0" BELOW EXISTING GRADE AS SHOWN.
11. REMOVE ALL EXISTING PIPES AND PLUG UNUSED HOLES IN CONCRETE SHAFT OF THE WET WELL WITH EPOXY GROUT. SURFACE PREPARATION AND APPLICATION PER MANUFACTURER'S WRITTEN INSTRUCTIONS.
12. EXISTING DRY WELL SHAFT ABANDON IN PLACE AS SHOWN.
13. EXISTING DISCHARGE PIPE TO BE ABANDONED IN PLACE.

GRAPHIC SCALE

0 1' 2' 4'

SCALE: 1/2" = 1'-0"

REVISIONS

| NO. | DATE | BY | DESCRIPTION |
|---|---|---|---|
| | | | |

DESIGN INFORMATION

DESIGNED BY: KK | DRAWN BY: VL | CHECKED BY: GD | PROJECT MANAGER: AM

SEAL

PROFESSIONAL CERTIFICATION. I HEREBY CERTIFY THAT THESE DOCUMENTS WERE PREPARED OR APPROVED BY ME, AND THAT I AM A DULY LICENSED PROFESSIONAL ENGINEER UNDER THE LAWS OF THE STATE OF MARYLAND, LICENSE NO. 9050 EXPIRATION DATE: 08/19/2023

STATE OF MARYLAND · GURMEET S. DHILLON · 9050 · PROFESSIONAL ENGINEER

5/31/22

WASHINGTON COUNTY DEPARTMENT OF ENGINEERING SERVICES
16232 ELLIOTT PARKWAY
WILLIAMSPORT, MD 21795
WASHINGTON COUNTY, MARYLAND

FARM LANE PUMP STATION
STRUCTURAL DEMOLITION PLAN AND SECTION I

DHILLON ENGINEERING INC.
10902 Reisterstown Rd, Suite 204
Owings Mills, Maryland 21117
(410) 356-1095

EA Engineering, Science, and Technology, Inc., PBC
Hunt Valley Center
225 Schilling Circle, Suite 400
Hunt Valley, Maryland 21031
(410) 584-7000

DATE: APRIL 2022

PROJECT NUMBER: 1556701

**S-101**

SHEET: 52 OF 76

SP-21-025 / SWCP-21-020

FILE PATH: Z:\PROJECTS\EA\3-WASH COUNTY THREE PUMP STATIONS\04 DRAWINGS\BASE\1556701_TR 2020.DWG,MODEL],OFELIA MAZILU 5/17/2019 3:38 PM

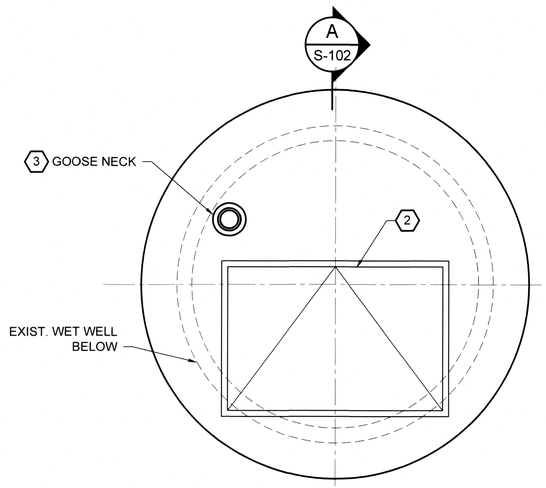


**WET WELL - NEW WORK PLAN**
SCALE: 1/2" = 1'-0"

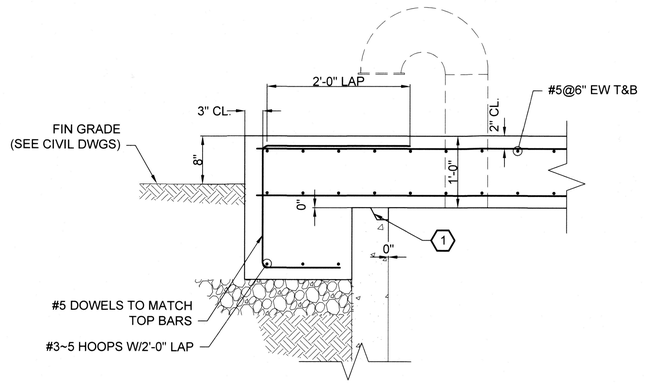


1 S-102 **DETAIL - NEW CONC SLAB**
SCALE: 1" = 1'-0"

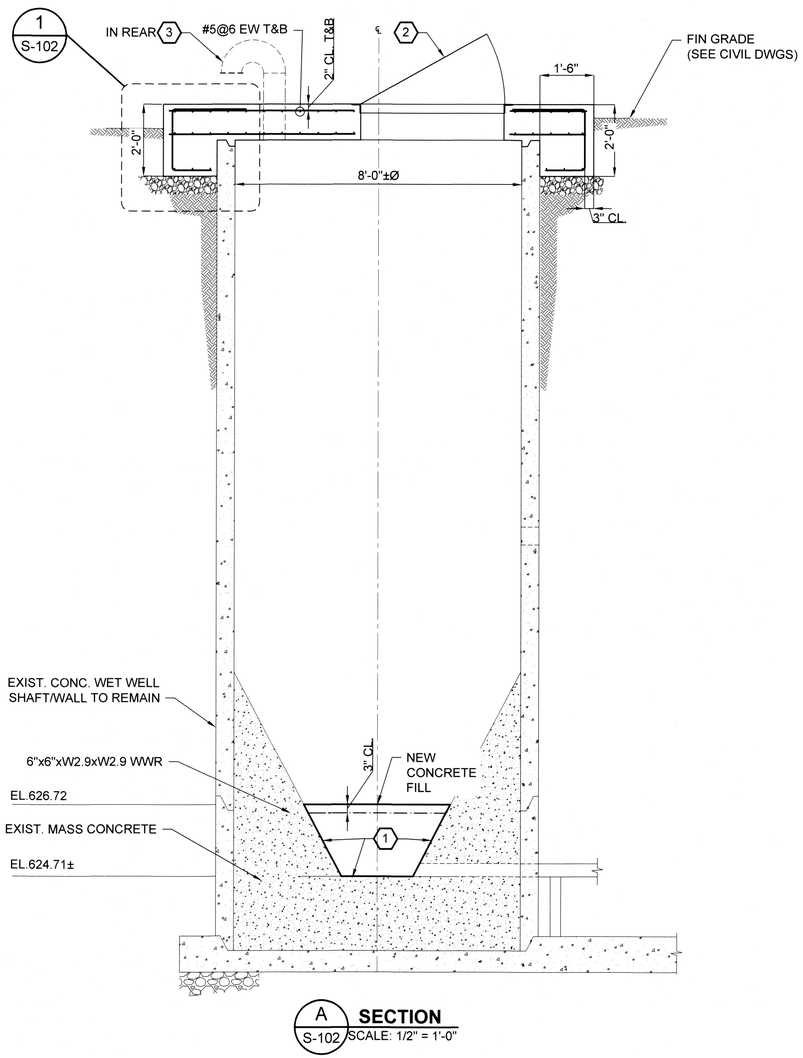


A S-102 **SECTION**
SCALE: 1/2" = 1'-0"

## GENERAL SHEET NOTES:

1. FOR GENERAL NOTES AND STANDARD DETAILS SEE DWGS. S-001 & S-002.
2. DIMENSIONS MARKED THUS "*" COORDINATE WITH EQUIPMENT SUPPLIED.
3. SIZE/DIAMETER OF HOLES IN THE TOP SLAB SHALL BE COORDINATED WITH EQUIPMENT SUPPLIED.
4. FOR SIZE, LOCATION OF TOP, BOTTOM AND ELEVATION OF ALL PIPE, CONDUIT PENETRATIONS INTO WET WELL SHAFT COORDINATE WITH CIVIL, ELECTRICAL AND MECHANICAL DRAWINGS.
5. GROUT FILL SHALL BE 1:1 EXCEPT IN AREA OF SUCTION PIPES, COORDINATE WITH PROCESS DRAWINGS.
6. FOR ADDITIONAL REINFORCING AROUND OPENINGS SEE DETAIL 4/S-002.

## NEW WORK NOTES (X):

1. INTERFACE SHALL BE ROUGHENED AND CLEANED TO A FULL AMPLITUDE OF APPROXIMATELY 1/4". APPLY, TO CURED CONCRETE, EPOXY BONDING COMPOUND/PRIMER (FX #763 AS MANUFACTURED BY SIMPSON STRONG TIE OR APPROVED EQUAL) BEFORE PLACING NEW CONCRETE. FOLLOW MANUFACTURER'S INSTRUCTIONS REGARDING SURFACE PREPARATION, MIXING, AND APPLICATION.
2. PROVIDE HEAVY DUTY 6'-0"x4'-0" ALUM. ACCESS DOOR TO BE FLUSH W/ CONCRETE SLAB, INSTALL PER MANUFACTURER'S DETAILS. THE ACCESS DOOR SHALL BE LOCATED DIRECTLY OVER PUMPS AND COORDINATE W/PROCESS DRAWINGS AND EQUIPMENT SUPPLIED.
3. PROVIDE AND INSTALL 8"Ø GALV. STEEL PIPE STD GOOSE NECK VENT PIPE W/ SS INSECT SCREEN SECURELY ATTACHED AT OUTER END OF PIPE AS SHOWN. FOR LOCATION OF VENT PIPE COORDINATE WITH PROCESS DRAWINGS.

GRAPHIC SCALE
0 6" 1' 2'
SCALE: 1" = 1'-0"
0 1' 2' 4'
SCALE: 1/2" = 1'-0"

REVISIONS

| NO. | DATE | BY | DESCRIPTION |
|---|---|---|---|
| | | | |

DESIGN INFORMATION
DESIGNED BY: KK
DRAWN BY: VL
CHECKED BY: GD
PROJECT MANAGER: AM

PROFESSIONAL CERTIFICATION. I HEREBY CERTIFY THAT THESE DOCUMENTS WERE PREPARED OR APPROVED BY ME, AND THAT I AM A DULY LICENSED PROFESSIONAL ENGINEER UNDER THE LAWS OF THE STATE OF MARYLAND. LICENSE NO. 8050 EXPIRATION DATE: 08/19/2023

SEAL: STATE OF MARYLAND · GURMEET S. DHILLON · REG. NO. 22020 · PROFESSIONAL ENGINEER

WASHINGTON COUNTY DEPARTMENT OF ENGINEERING
16232 ELLIOTT PARKWAY
WILLIAMSPORT, MD 21795
WASHINGTON COUNTY, MARYLAND

FARM LANE PUMP STATION
STRUCTURAL PLAN AND SECTION II

DHILLON ENGINEERING INC.
10902 Reisterstown Rd, Suite 204
Owings Mills, Maryland 21117
(410) 356-1095

EA Engineering, Science, and Technology, Inc., PBC
Hunt Valley Center
225 Schilling Circle, Suite 400
Hunt Valley, Maryland 21031
(410) 584-7000

DATE: APRIL 2022
PROJECT NUMBER: 1556701

**S-102**
SHEET: 53 OF 76

SP-21-025 / SWCP-21-020

FILE PATH: Z:\PROJECTS\EA\19 WASH COUNTY THREE PUMP STATIONS\04 DRAWINGS\BASE\1556701_TB 2020 DWG [MODEL] [OF] ELIA MAZILU 5/17/2019 3:38 PM

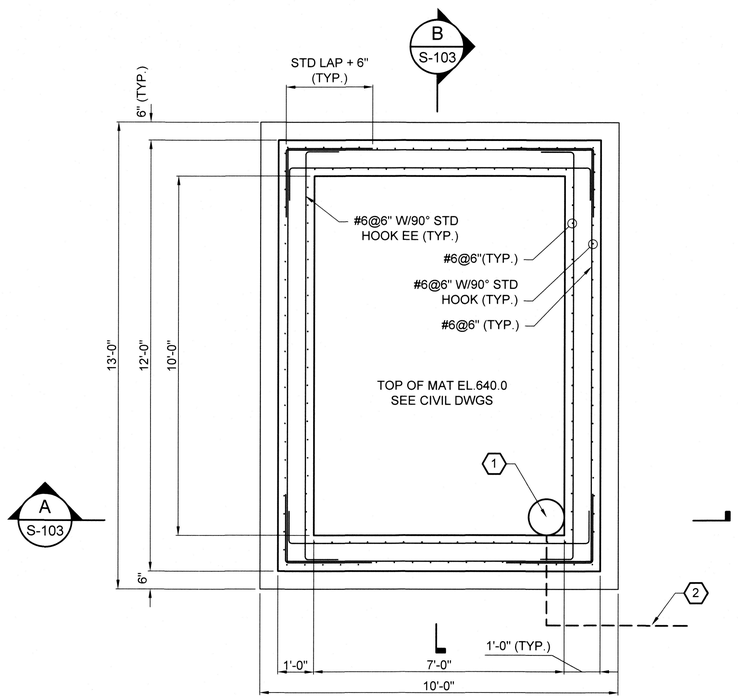


**BOTTOM SLAB PLAN** N
SCALE: 1/2" = 1'-0"

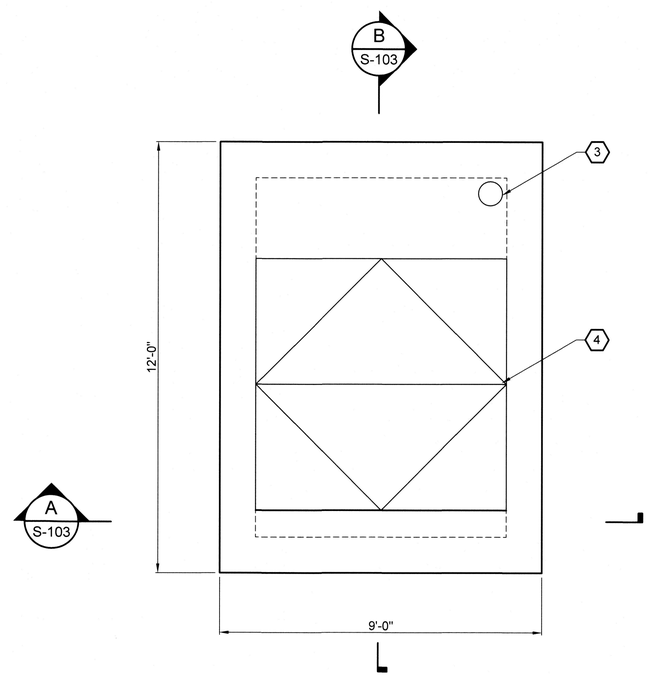


**TOP SLAB PLAN** N
SCALE: 1/2" = 1'-0"

## GENERAL NOTES:

1. FOR GENERAL NOTES AND STANDARD DETAILS SEE DWG S-001.
2. FOR LOCATION OF VAULT AND PIPES PENETRATIONS COORDINATE WITH CIVIL DRAWINGS.
3. SIZE/DIAMETER OF HOLES IN THE TOP SLAB AND WALLS SHALL BE COORDINATED WITH EQUIPMENT SUPPLIED AND CIVIL DRAWINGS.
4. FOR SIZE, LOCATION OF TOP, BOTTOM AND ELEVATION OF ALL PIPE PENETRATIONS COORDINATE WITH CIVIL, ELECTRICAL AND MECHANICAL DRAWINGS.
5. LOCATION OF 7'-0"x7'-0" DOUBLE LEAF HEAVY DUTY ALUM HATCH SHALL BE COORDINATED WITH CIVIL DRAWINGS.
6. ALL CNJ OF WALLS AND SLAB SHALL BE PROVIDED AS PER CONCRETE NOTE #13 ON SHEET S-001.
7. LOCATION, SIZE MOUNTING DETAILS INCLUDING HARDWARE QUANTITY, AND OTHER REQUIREMENTS OF SUPPORT PEDESTALS/PADS FOR PIPES, EQUIPMENT, VALVES ETC. SHALL BE COORDINATED WITH PROCESS, MECHANICAL, ELECTRICAL DRAWINGS.

## SHEET KEY NOTES (X):

1. PROVIDE SUMP PIT, 12"Ø x 12" DEEP PLASTIC LINER WITH LID ENCASED IN MIN. 6" CONCRETE. LOCATION COORDINATE WITH CIVIL DRAWINGS.
2. PROVIDE 4"Ø SCH.40 PVC DISCHARGE PIPE AT BOTTOM OF SUMP PIT TO EXISTING WET WELL. PIPE'S INVERT AT WET WELL SHALL BE 3" HIGHER THAN CROWN OF PIPE IN SUMP PIT. CORE DRILL 5"Ø HOLE IN WET WELL WALL, SET 4"Ø PIPE AND SEAL ANNULAR SPACE AROUND PIPE.
3. PROVIDE AND INSTALL 8"Ø GALV. STEEL PIPE STD GOOSE NECK VENT PIPE W/ SS INSECT SCREEN AT OUTER END, AS SHOWN AND COORDINATE WITH MECHANICAL DRAWINGS.
4. PROVIDE 7'-0"x7'-0" DOUBLE LEAF HEAVY DUTY ALUM LOCKABLE FLOOR HATCH (90° SWING) WITH 1"Ø DRAIN PIPE TO SUMP PIT. LOCATE HATCH OVER VALVES AND COORDINATE WITH PROCESS/CIVIL DRAWINGS.
5. PIPE CRADLE SUPPORT DETAIL SHOWN IS FOR CONCEPT ONLY. CONTRACTOR SHALL DESIGN AND PROVIDE PIPE/VALVE GALV STEEL SUPPORTS, AS REQUIRED AND ANCHOR TO THE SLAB AS INDICATED.

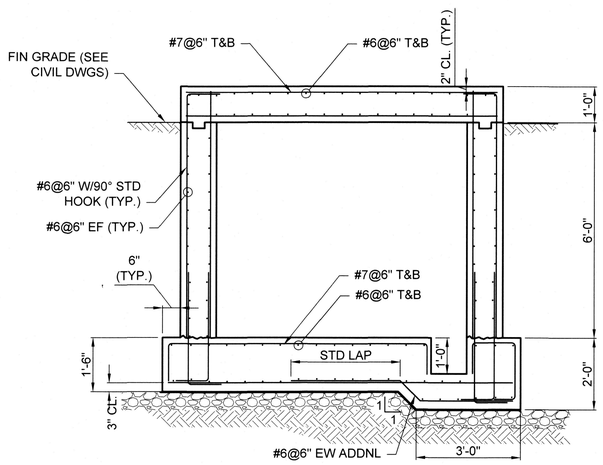


A S-103 **SECTION**
SCALE: 1/2" = 1'-0"

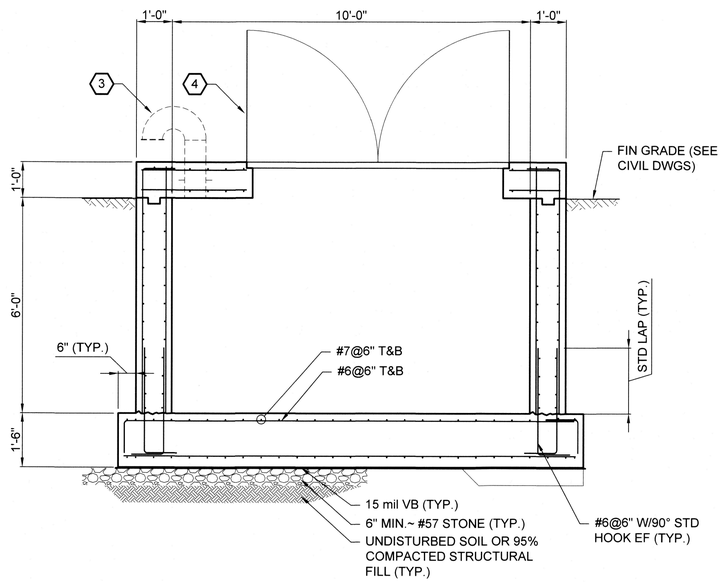


B S-103 **SECTION**
SCALE: 1/2" = 1'-0"

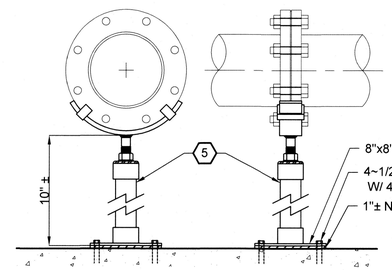


SECTION ELEVATION

1 S-103 **PIPE CRADLE SUPPORT DETAIL**
NOT TO SCALE

GRAPHIC SCALE
0 1' 2' 4'
SCALE: 1/2" = 1'-0"

REVISIONS

| NO. | DATE | BY | DESCRIPTION |
|---|---|---|---|
| | | | |

DESIGN INFORMATION: DESIGNED BY: KK | DRAWN BY: VL | CHECKED BY: GD | PROJECT MANAGER: AM

SEAL

PROFESSIONAL CERTIFICATION. I HEREBY CERTIFY THAT THESE DOCUMENTS WERE PREPARED OR APPROVED BY ME, AND THAT I AM A DULY LICENSED PROFESSIONAL ENGINEER UNDER THE LAWS OF THE STATE OF MARYLAND, LICENSE NO. 80[illegible], EXPIRATION DATE: [illegible]/2023

STATE OF MARYLAND · GURMEET S. DHILLON · REG. NO. [illegible] · PROFESSIONAL ENGINEER

WASHINGTON COUNTY DEPARTMENT OF ENGINEERING SERVICES
16232 ELLIOTT PARKWAY
WILLIAMSPORT, MD 21795
WASHINGTON COUNTY, MARYLAND

FARM LANE VALVE VAULT
STRUCTURAL PLANS, SECTIONS AND DETAIL

DHILLON ENGINEERING INC.
10902 Reisterstown Rd, Suite 204
Owings Mills, Maryland 21117
(410) 356-1095

EA Engineering, Science, and Technology, Inc., PBC
Hunt Valley Center
225 Schilling Circle, Suite 400
Hunt Valley, Maryland 21031
(410) 584-7000

DATE: APRIL 2022
PROJECT NUMBER: 1556701

**S-103**
SHEET: 54 OF 76

SP-21-025 / SWCP-21-020

FILE PATH: Z:\PROJECTS\EA\19 WASH COUNTY THREE PUMP STATIONS\04 DRAWINGS\BASE\1556701_TB 2020.DWG [MODEL] | OFELIA MAZUJ | 7/7/2019 3:38 PM

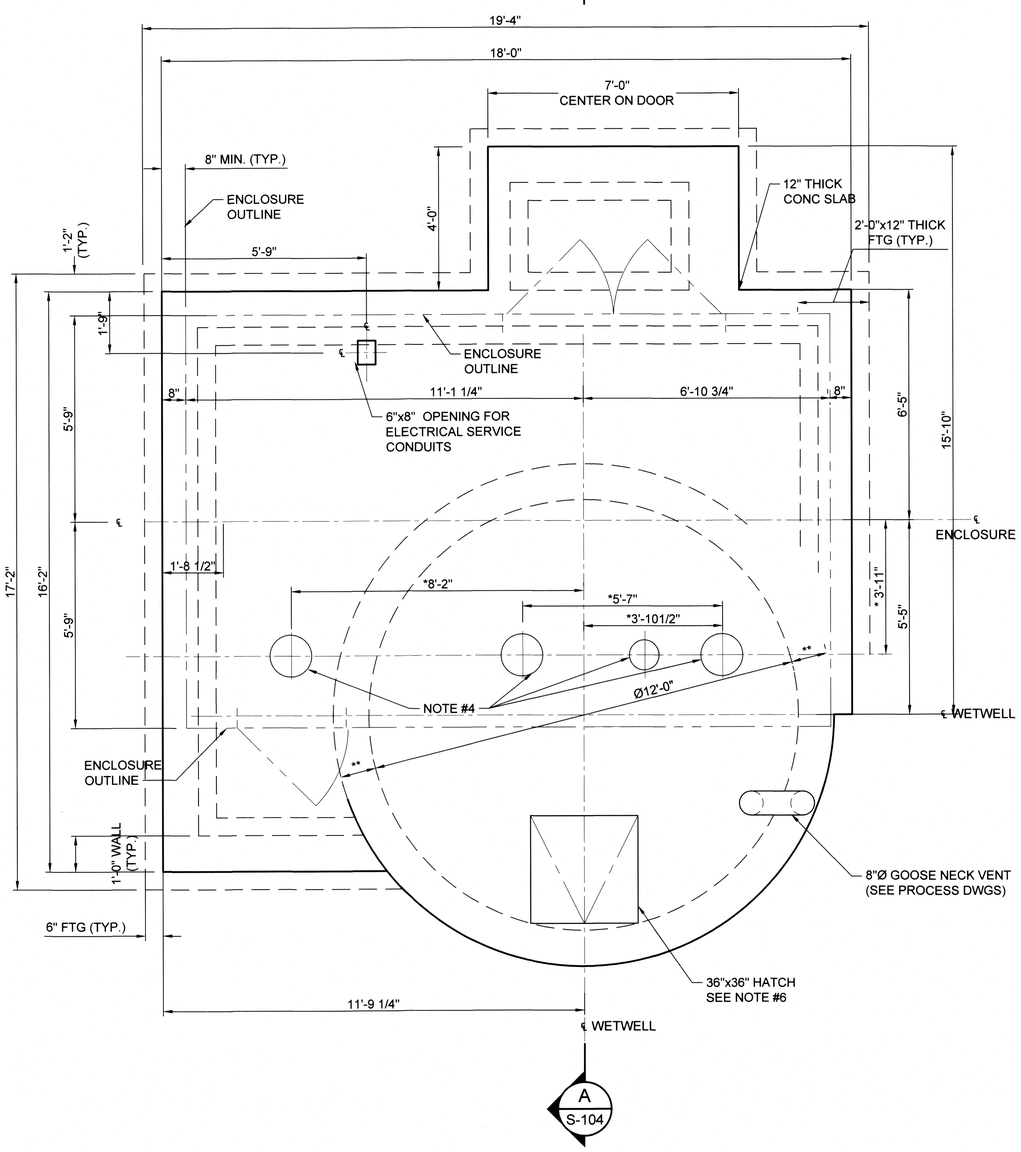


## WET WELL AND CONCRETE PAD FOR PACKAGED PUMPING UNIT

SCALE: 1/2" = 1'-0"

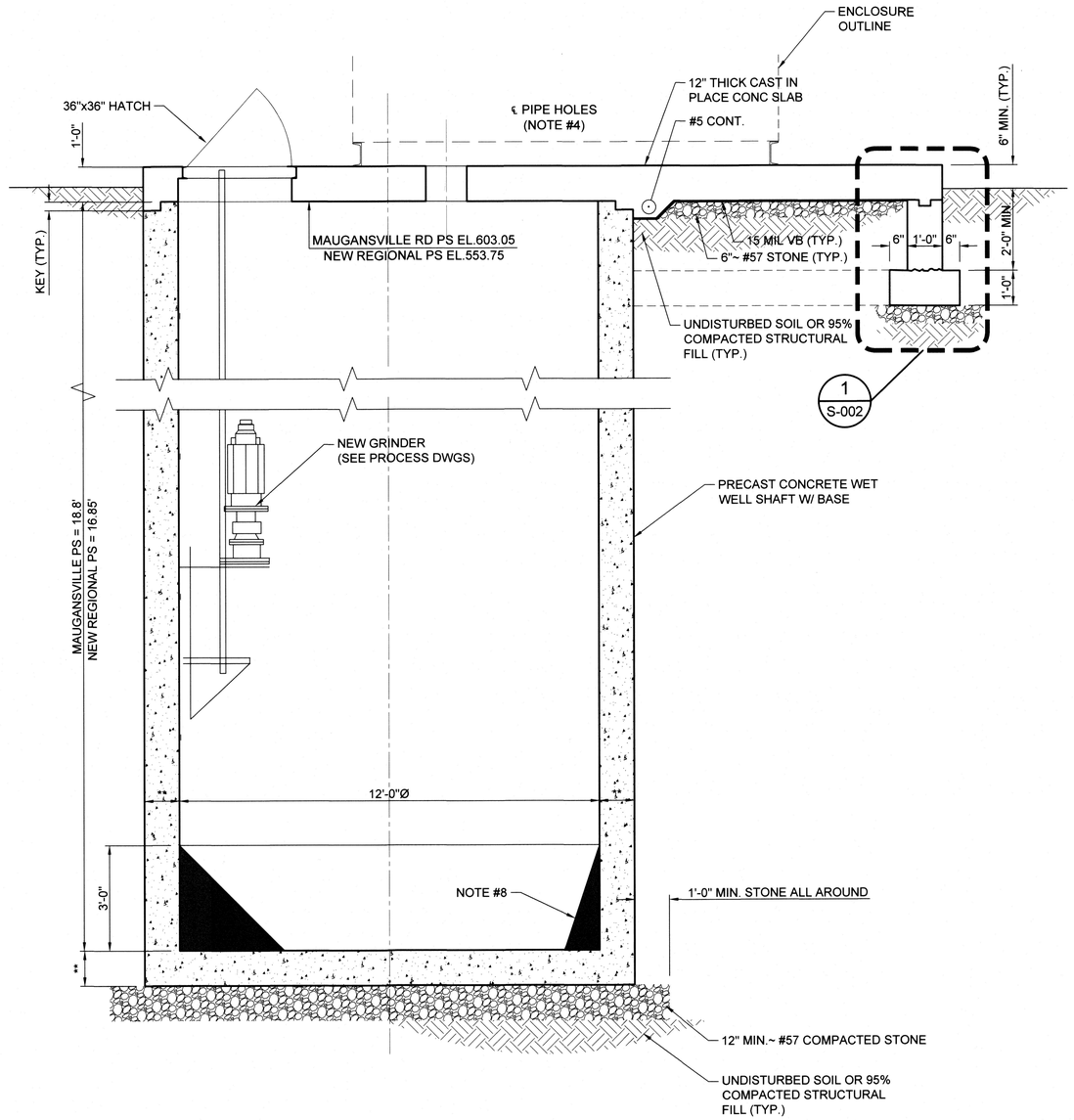


A S-104 **SECTION**
NOT TO SCALE

## NOTES:

1. FOR GENERAL NOTES AND STANDARD DETAILS SEE DWGS. S-001 & S-002.
2. DIMENSIONS MARKED THUS "*" COORDINATE WITH EQUIPMENT SUPPLIED.
3. DIMENSIONS MARKED THUS "**" SHALL BE PER DESIGN OF PRECAST WET WELL MANUFACTURER.
4. SIZE/DIAMETER OF HOLES IN THE TOP SLAB SHALL BE COORDINATED WITH EQUIPMENT SUPPLIED.
5. FOR SIZE, LOCATION OF TOP, BOTTOM AND ELEVATION OF ALL PIPE PENETRATIONS INTO WET WELL SHAFT COORDINATE WITH CIVIL, ELECTRICAL AND MECHANICAL DRAWINGS.
6. SEE PROCESS DRAWINGS FOR HATCH QUANTITY AND LOCATION.
7. WET WELL SHAFT SHALL BE PRECAST CONCRETE MONOLITHIC WITH BASE PER SPECIFICATIONS.
8. GROUT FILL SHALL BE 1:1 EXCEPT IN AREA OF SUCTION PIPES, COORDINATE WITH PROCESS DRAWINGS.

GRAPHIC SCALE
0 1' 2' 4'
SCALE: 1/2" = 1'-0"


DEI
DHILLON ENGINEERING INC.
10902 Reisterstown Rd, Suite 204
Owings Mills, Maryland 21117
(410) 356-1095


REVISIONS

| NO. | DATE | BY | DESCRIPTION |
|---|---|---|---|

DESIGN INFORMATION
DESIGNED BY: KK
DRAWN BY: VL
CHECKED BY: GD
PROJECT MANAGER: AM

SEAL

PROFESSIONAL CERTIFICATION. I HEREBY CERTIFY THAT THESE DOCUMENTS WERE PREPARED OR APPROVED BY ME, AND THAT I AM A DULY LICENSED PROFESSIONAL ENGINEER UNDER THE LAWS OF THE STATE OF MARYLAND. LICENSE NO. 8050 EXPIRATION DATE: 09/2023

STATE OF MARYLAND · GURMEET DHILLON · REGISTERED · NO. 8050 · PROFESSIONAL ENGINEER

WASHINGTON COUNTY DEPARTMENT OF ENGINEERING SERVICES
16232 ELLIOTT PARKWAY
WILLIAMSPORT, MD 21795
WASHINGTON COUNTY, MARYLAND

MAUGANSVILLE ROAD / NEW REGIONAL PUMPING STATIONS
STRUCTURAL PLAN & SECTION


EA Engineering, Science, and Technology, Inc., PBC
Hunt Valley Center
225 Schilling Circle, Suite 400
Hunt Valley, Maryland 21031
(410) 584-7000


DATE: APRIL 2022

PROJECT NUMBER: 1556701

**S-104**
SHEET: 55 OF 76

SP-21-025 / SWCP-21-020

FILE PATH: Z:\PROJECTS\EA\13 WASH COUNTY THREE PUMP STATIONS\04 DRAWINGS\PRODUCTIONS - 104 MAUGANSVILLE DWG [S-104 (AT) EVA MUZIU 4/26/2022 2:12 PM

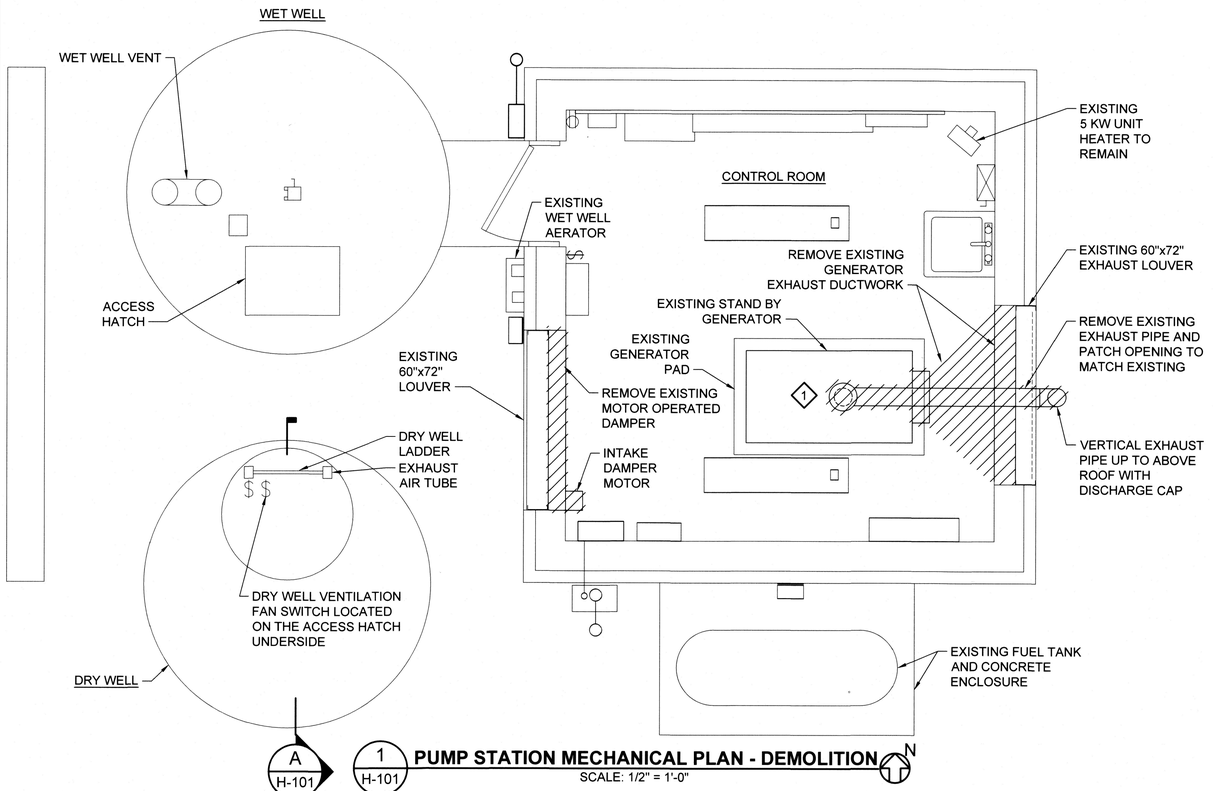


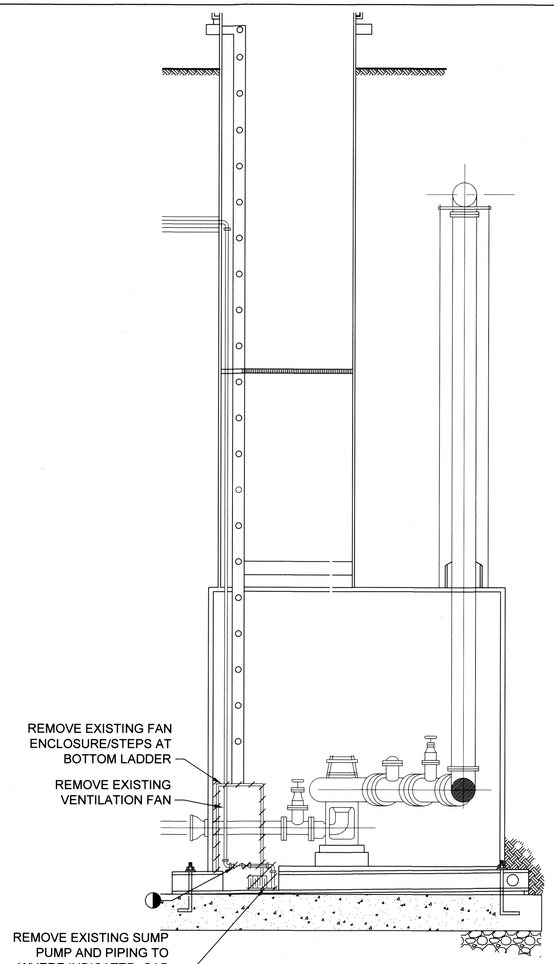


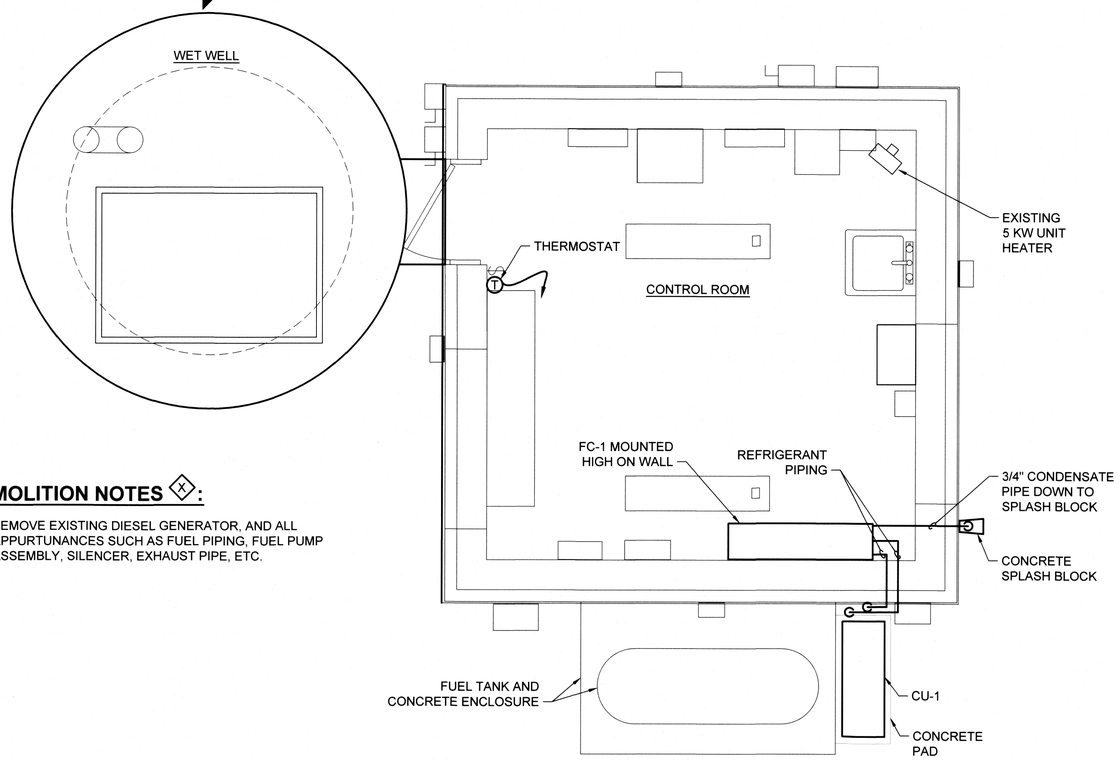


## DEMOLITION NOTES ⓧ:

1. REMOVE EXISTING DIESEL GENERATOR, AND ALL APPURTUNANCES SUCH AS FUEL PIPING, FUEL PUMP ASSEMBLY, SILENCER, EXHAUST PIPE, ETC.

## DUCTLESS SPLIT SYSTEM HEAT PUMP UNIT SCHEDULE

| MARK | | SERVICE | FAN DATA | COOLING | | | | | | | | | | REMARKS | NOTES |
|---|---|---|---|---|---|---|---|---|---|---|---|---|---|---|---|
| EVAPORATOR | CONDENSING UNIT | | SUPPLY AIR CFM (L/M/H) | AMB AIR (°F) | INDOOR CONDITIONS DB (°F) | INDOOR CONDITIONS WB (°F) | COOLING CAP. (MBH) | INDOOR UNIT FAN FLA | INDOOR UNIT W | INDOOR UNIT V/PH | OUTDOOR UNIT MCA | OUTDOOR UNIT MOCP | OUTDOOR UNIT V/PH | | |
| FC-1 | CU-1 | CONTROL ROOM | 635/705/775 | 95 | 80 | 67 | 30.0 | 0.36 | 56 | 208 / 1 | 19 A | 26 A | 208 / 1 | SEER 19.8 | SEE NOTES |

NOTES:

1. BASIS OF DESIGN: MITSUBISHI WALL MOUNTED FAN COIL HEAT PUMP MODEL PKA-A30KA7 WITH OUTDOOR MODEL PUY-A30NHA7(-B5) OR APPROVED EQUAL.
2. INDOOR UNIT SHALL BE PROVIDED WITH 3 SPEED AND AUTO FAN CONTROL.
3. THE INDOOR UNIT TO DRAW IT'S POWER FROM THE OUTDOOR UNIT.
4. UNIT SHALL MEET THE ASHRAE 90.1-2010 PERFORMANCE CRITERIA.
5. REFRIGERANT PIPING SHALL BE SIZED IN ACCORDANCE WITH MANUFACTURERS RECOMMENDATIONS.
6. PROVIDE WIND BAFFLE ON OUTDOOR CONDENSING UNIT FOR LOW AMBIENT COOLING OPERATION.

GRAPHIC SCALE
0 1' 2' 4'
SCALE: 1/2" = 1'-0"

REVISIONS

| NO. | DATE | BY | DESCRIPTION |
|---|---|---|---|

DESIGN INFORMATION: DESIGNED BY: EM | DRAWN BY: OM | CHECKED BY: AM | PROJECT MANAGER: AM

PROFESSIONAL CERTIFICATION. I HEREBY CERTIFY THAT THESE DOCUMENTS WERE PREPARED OR APPROVED BY ME, AND THAT I AM A DULY LICENSED PROFESSIONAL ENGINEER UNDER THE LAWS OF THE STATE OF MARYLAND, LICENSE NO. 8050 EXPIRATION DATE: 08/19/2023

SEAL: STATE OF MARYLAND · GURMEET S. CHHABRA · REG. NO. 8050 · PROFESSIONAL ENGINEER · 5/27/22

WASHINGTON COUNTY DEPARTMENT OF ENGINEERING SERVICES
16232 ELLIOTT PARKWAY
WILLIAMSPORT, MD 21795
WASHINGTON COUNTY, MARYLAND

FARM LANE PUMP STATION
HVAC DEMOLITION AND NEW PLANS


EA Engineering, Science, and Technology, Inc., PBC
Hunt Valley Center
225 Schilling Circle, Suite 400
Hunt Valley, Maryland 21031
(410) 584-7000

DHILLON ENGINEERING INC.
10902 Reisterstown Rd, Suite 204
Owings Mills, Maryland 21117
(410) 356-1095


DATE: APRIL 2022
PROJECT NUMBER: 1556701

H-101
SHEET: 56 OF 76

SP-21-025 / SWCP-21-020

FILE PATH: Z:\PROJECTREA\19 WASH COUNTY THREE PUMP STATIONS\04 DRAWINGS\BASE\1556701_TB 2020.DWG [MODEL] OFELIA MAZALU 5/17/2019 3:38 PM

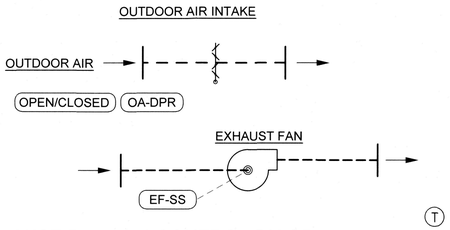


## EXHAUST FAN EF-1 CONTROL DIAGRAM

NOT TO SCALE

A. GENERAL INFORMATION

THE SYSTEM CONSISTS OF AN EXHAUST FAN AND A MOTOR OPERATING DAMPER. THE CONSTANT VOLUME EXHAUST FAN SERVES UTILITY SPACES TO RUN WHEN THE SPACE TEMPERATURE EXCEEDS SETPOINT (85°F, ADJ.).

ON A CALL FOR THE EXHAUST FAN TO ENERGIZE, THE FOLLOWING START-UP SEQUENCE SHALL OCCUR:

- COMMAND OUTSIDE AIR DAMPER TO OPEN AND PROVE THE DAMPER IS OPEN THOUGHT AN ENDSWITCH.
- ENERGIZE ASSOCIATED EXHAUST FAN.

ON A DROP IN SPACE TEMPERATURE TO 5°F (ADJ.) BELOW SETPOINT, THE EXHAUST FAN SHALL DE-ENERGIZE AND THE OA DAMPER SHALL CLOSE.

WHENEVER THE EXHAUST FAN IS DE-ENERGIZED, THE OA DAMPER SHALL BE CLOSED.

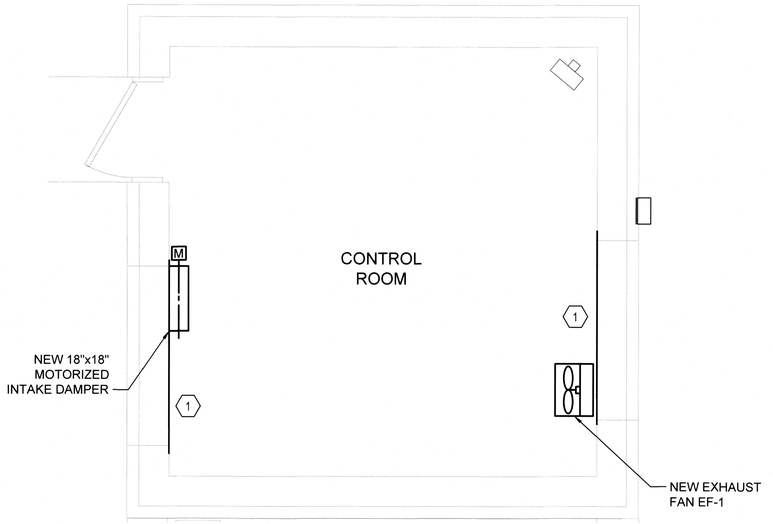


## PUMP STATION MECHANICAL PLAN - NEW PLAN

SCALE 1/2" = 1'-0"

N

## SPECIFIC NOTES (X):

1. CLOSE EXISTING GENERATOR INTAKE AND EXHAUST LOUVER OPENINGS AIR TIGHT WITH NEW SHEET METAL. MAKE OPENING IN NEW SHEET METAL TO INSTALL AN INTAKE DAMPER AND EXHAUST FAN.

## FAN SCHEDULE

| UNIT NO. | LOCATION | CFM | ESP (IN WG) | FAN (RPM) | TYPE | DRIVE | HP | V | PH | HZ | FLA | BASIS OF DESIGN |
|---|---|---|---|---|---|---|---|---|---|---|---|---|
| EF-1 | CONTROL ROOM | 200 | 0.5 | 1425 | WALL PROPELLER | DIRECT | 0.25 | 120 | 1 | 60 | 6 | GREENHECK SE-1-10-428-P |

NOTES:

1. PROVIDE BUILT IN FACTORY MOUNTED DISCONNECT SWITCH, ELECTRICAL TO PROVIDE STARTER.
2. FAN SHALL INCLUDE BACKDRAFT DAMPER, SOLID STATE SPEED CONTROL, PLUG TYPE DISCONNECT, GRILLE AND VIBRATION ISOLATION KIT.

GRAPHIC SCALE

0 1' 2' 4'

SCALE: 1/2" = 1'-0"

DHILLON ENGINEERING INC.
10902 Reisterstown Rd, Suite 204
Owings Mills, Maryland 21117
(410) 356-1095

REVISIONS

| NO. | DATE | BY | DESCRIPTION |
|---|---|---|---|

DESIGN INFORMATION

| DESIGNED BY: | DRAWN BY: | CHECKED BY: | PROJECT MANAGER: |
|---|---|---|---|
| KK | KK | RK | AM |

PROFESSIONAL CERTIFICATION. I HEREBY CERTIFY THAT THESE DOCUMENTS WERE PREPARED OR APPROVED BY ME, AND THAT I AM A DULY LICENSED PROFESSIONAL ENGINEER UNDER THE LAWS OF THE STATE OF MARYLAND, LICENSE NO. 8050 EXPIRATION DATE: 08/19/2023

SEAL: STATE OF MARYLAND · ROBERT SUMMET KLEIN · REGISTERED · NO. 8050 · PROFESSIONAL ENGINEER

WASHINGTON COUNTY DEPARTMENT OF ENGINEERING SERVICES
16232 ELLIOTT PARKWAY
WILLIAMSPORT, MD 21795
WASHINGTON COUNTY, MARYLAND

MAUGANSVILLE ROAD PUMP STATION
HVAC NEW WORK PLAN

EA Engineering, Science, and Technology, Inc., PBC
Hunt Valley Center
225 Schilling Circle, Suite 400
Hunt Valley, Maryland 21031
(410) 584-7000

DATE: APRIL 2022

PROJECT NUMBER: 1556701

**H-102**

SHEET: 57 OF 76

SP-21-025 / SWCP-21-020

FILE PATH: Z:\PROJECTS\EA\19 WASH COUNTY THREE PUMP STATIONS\04 DRAWINGS\BASE\1556701_TB 2020.DWG [MODEL] OP ELLA MAZILU 9/17/2019 3:38 PM

## GENERAL NOTES:

1. CONTRACTOR SHALL BE RESPONSIBLE FOR COORDINATING ALL WORK WITH ELECTRIC POWER UTILITY COMPANY.
2. ALL WORK SHALL BE CARRIED OUT IN ACCORDANCE WITH THE LATEST EDITION OF NATIONAL ELECTRICAL CODE (NEC) AND APPLICABLE LOCAL CODES, RULES AND REGULATIONS.
3. ALL CONDUITS AND EQUIPMENT SHALL BE INSTALLED, WIRED AND GROUNDED IN ACCORDANCE WITH THE LATEST RULES AND REGULATIONS OF NEC AND LOCAL CODES.
4. CONDUIT RUNS ARE SHOWN DIAGRAMATICALLY ONLY AND SHALL BE INSTALLED IN A MANNER TO PREVENT CONFLICTS WITH OTHER EQUIPMENT. EXPOSED CONDUITS SHALL BE RUN ON THE WALLS HORIZONTALLY AND VERTICALLY.
5. CONDUITS SHALL BE TERMINATED SO AS TO PERMIT NEAT CONNECTION TO EQUIPMENT. CONDUIT ENDS SHALL BE SUITABLY SEALED TO PREVENT TRANSGRESS OF MOISTURE THROUGH CONDUITS FROM ONE EQUIPMENT TO OTHER.
6. CONDUITS AND WIRES SHALL BE SIZED IN ACCORDANCE WITH NEC UON. MINIMUM CONDUIT SIZE SHALL BE 3/4" UON, AND MINIMUM WIRE SIZE SHALL BE #12 AWG UON FOR POWER CIRCUITS.
7. CONDUITS INSTALLED EXPOSED ON EXTERIOR/INTERIOR OF BUILDING SHALL BE RGS.
8. WALL AND FLOOR PENETRATIONS FOR ELECTRICAL CONDUITS SHALL BE CORE DRILLED. PROVIDE SEGMENTED RUBBER COMPRESSION SEALS ON BOTH SIDES.
9. PROVIDE ALL REQUIRED PULL AND JUNCTION BOXES FOR INSTALLATION OF THE WIRING IN ACCORDANCE WITH THE CONTRACT SPECIFICATIONS THOUGH THE BOXES MAY NOT BE INDICATED ON THE DRAWINGS. ALL JUNCTION AND PULL BOXES SHALL BE LABELED WITH THEIR VOLTAGE AND USAGE.
10. FINAL LOCATION FOR ALL ELECTRICAL EQUIPMENT, INCLUDING RECEPTACLES, JUNCTION BOXES FOR SPECIFIED EQUIPMENT, LIGHTING FIXTURES, SWITCHES, ETC. SHALL BE APPROVED BY THE COUNTY PRIOR TO INSTALLATION.
11. THE WIRING DIAGRAMS, QUANTITY AND SIZE OF WIRES AND CONDUITS ARE BASED UPON SELECTED STANDARD COMPONENTS OF ELECTRICAL EQUIPMENT. MODIFICATIONS APPROVED BY THE COUNTY MAY BE MADE BY THE CONTRACTOR AT HIS EXPENSE TO ACCOMMODATE EQUIPMENT ACTUALLY PURCHASED.
12. ALL ALARM INDICATION AND CONTROL WIRING IN JUNCTION BOXES SHALL BE WIRED TO NUMBERED TERMINAL STRIPS AND IDENTIFIED AS TO START AND END OF RUN.
13. ALL ELECTRICAL EQUIPMENT INSTALLED AGAINST CONCRETE OR MASONRY WALLS SHALL BE INSTALLED WITH 1/4" SPACERS BETWEEN THE EQUIPMENT AND THE MOUNTING SURFACE. SPACERS SHALL BE STAINLESS STEEL, PVC, OR NYLON.
14. ELECTRICAL ENCLOSURES LOCATED OUTDOORS SHALL BE WEATHERPROOF NEMA 4X, UON.
15. ALL CONDUIT TERMINATIONS IN PULL BOXES OR EQUIPMENT SHALL BE MADE USING "MYERS HUBS " FOR EQUIPMENT RATED OTHER THAN NEMA 1 OR 11.
16. PROVIDE OVERSIZED LUGS WHERE NEEDED TO ACCOMMODATE OVERSIZED WIRES.

## LEGEND:

| | |
|---|---|
| | COMBINATION STARTER, SIZE AS NOTED |
| | JUNCTION BOX |
| M | MOTOR; HP AS NOTED |
| | GROUND |
| | FUSE |
| G | ELECTRIC GROUND GRID DIRECT BURIED |
| | CONDUIT UNDER FLOOR SLAB OR EMBEDDED, STUB-UP ENDS AT 4" AFF |
| | CIRCUIT BREAKER |
| $ | WALL SWITCH 20A, 120V IN NEMA-12 ENCLOSURE, UON |
| $3 | 3 WAY WALL SWITCH 20A, 120V IN NEMA-12 ENCLOSURE, UON |
| $M | MANUAL STARTER WITH HOA SWITCH IN NEMA-12 ENCLOSURE, UON, COMPATIBLE WITH MOTOR |
| | DISCONNECT SWITCH NON-FUSED, 30A, 3P, 208V, NEMA-12 ENCLOSURE, UON |
| | GROUND ROD |
| | DUPLEX RECEPTACLE 20A, 125V, NEMA 5-20R, MH 1'-6" AFF |
| G | GROUND FAULT RECEPTACLE 20A, 125V, NEMA 5-20R, 6" ABOVE SINK |
| WP | WEATHER PROOF GROUND FAULT RECEPTACLE IN IN-USE WEATHER PROOF COVER, 20A, 125V, NEMA 5-20R, 18" AFF |
| | ELECTRIC UNIT HEATER - EUH |
| | ELECTRICAL HOMERUNS TO PANELBOARD/SWITCHBOARD |
| E | EXISTING ELECTRICAL MANHOLE |
| | LED LUMINAIRE, 2'x4' MODULAR |
| | EMERGENCY BATTERY PACK, 2 HEADS |
| | SURFACE MOUNTED LED LUMINAIRE |
| | WALL MOUNTED LUMINAIRE |
| | WALL MOUNTED EXTERIOR LUMINAIRE |

## ELECTRICAL ABBREVIATIONS:

| | |
|---|---|
| A, AMP | AMPERE |
| AC | ALTERNATING CURRENT |
| AF | AMPERE FRAME |
| AFF | ABOVE FINISHED FLOOR |
| AIC | AMPS INTERRUPTING CAPACITY |
| AT | AMPERE TRIP |
| ATS | AUTOMATIC TRANSFER SWITCH |
| C | CONDUIT |
| CB | CIRCUIT BREAKER |
| CKT | CIRCUIT |
| CONN | CONNECTION OR CONNECT |
| DET | DETAIL |
| DWG | DRAWING |
| EF | EXHAUST FAN |
| ELECT | ELECTRICAL |
| EUH | ELECTRIC UNIT HEATER |
| EX. | EXISTING |
| FVNR | FULL VOLTAGE NON-REVERSING |
| G, GRD | GROUND |
| GRS | GALVANIZED RIGID STEEL CONDUIT |
| HP | HEAT PUMP/HORSEPOWER |
| Hz | HERTZ |
| I | INSTRUMENTATIONS |
| KA | KILO AMPERES |
| KAIC | KILOAMPERES INTERRUPTING CAPACITY |
| KCMIL | THOUSAND CIRCULAR MILLS |
| KW | KILOWATT |
| KVA | KILOVOLT AMPERE |
| LED | LIGHT EMITTING DIODE |
| MAX | MAXIMUM |
| MCCB | MOLDED CASE CIRCUIT BREAKER |
| MIN | MINIMUM |
| MOT | MOTOR |
| N | NEUTRAL |
| NEC | NATIONAL ELECTRICAL CODE |
| P | POLE |
| PB | PULL BOX |
| PCP | PUMP CONTROL PANEL |
| PNL | PANEL |
| PWR | POWER |
| PVC | POLYVINYL CHLORIDE |
| REC/RECP | RECEPTACLE |
| RMC | RIGID METAL CONDUIT |
| SCH | SCHEDULE |
| SF | SUPPLY FAN |
| SPD | SURGE PROTECTION DEVICE |
| SS | STAINLESS STEEL |
| TSP | TWISTED SHIELDED PAIR |
| TYP | TYPICAL |
| UG | UNDERGROUND |
| UON | UNLESS OTHERWISE NOTED |
| V | VOLTS |
| VA | VOLT AMPERE |
| W | WATTS |
| WP | WEATHER PROOF |

REVISIONS

| NO. | DATE | BY | DESCRIPTION |
|---|---|---|---|
| | | | |

DESIGN INFORMATION: DESIGNED BY: KK | DRAWN BY: KK | CHECKED BY: RK | PROJECT MANAGER: AM

SEAL

PROFESSIONAL CERTIFICATION. I HEREBY CERTIFY THAT THESE DOCUMENTS WERE PREPARED OR APPROVED BY ME, AND THAT I AM A DULY LICENSED PROFESSIONAL ENGINEER UNDER THE LAWS OF THE STATE OF MARYLAND. LICENSE NO. 8050 EXPIRATION DATE: 08/19/2023

STATE OF MARYLAND · JUMEET S. KAPOOR · REGISTERED NO. 8050 · PROFESSIONAL ENGINEER · 5/2/22

WASHINGTON COUNTY DEPARTMENT OF ENGINEERING SERVICES
16232 ELLIOTT PARKWAY
WILLIAMSPORT, MD 21795
WASHINGTON COUNTY, MARYLAND

ELECTRICAL GENERAL NOTES, LEGENDS, AND ABBREVIATIONS

STATE OF MARYLAND · JUMEET S. KAPOOR · REGISTERED NO. 8050 · PROFESSIONAL ENGINEER · 5/2/22

DEI
DHILLON ENGINEERING INC.
10902 Reisterstown Rd, Suite 204
Owings Mills, Maryland 21117
(410) 356-1095

EA®
EA Engineering, Science, and Technology, Inc., PBC
Hunt Valley Center
225 Schilling Circle, Suite 400
Hunt Valley, Maryland 21031
(410) 584-7000

DATE: APRIL 2022

PROJECT NUMBER: 1556701

E-001

SHEET: 58 OF 76

SP-21-025 / SWCP-21-020

FILE PATH: Z:\PROJECTS\EA\19 WASH COUNTY THREE PUMP STATIONS\4 DRAWING\PRODUCTION\E-001.DWG [E-001] OFELIA MAZELI 4/29/2022 2:01 PM

## SPECIFIC NOTES DEMOLITION (X):

1. CONTRACTOR SHALL COORDINATE WITH UTILITY COMPANY FOR REMOVAL OF EXISTING METER. REMOVE ABOVE GROUND CONDUIT. ABANDON UNDERGROUND DUCT.

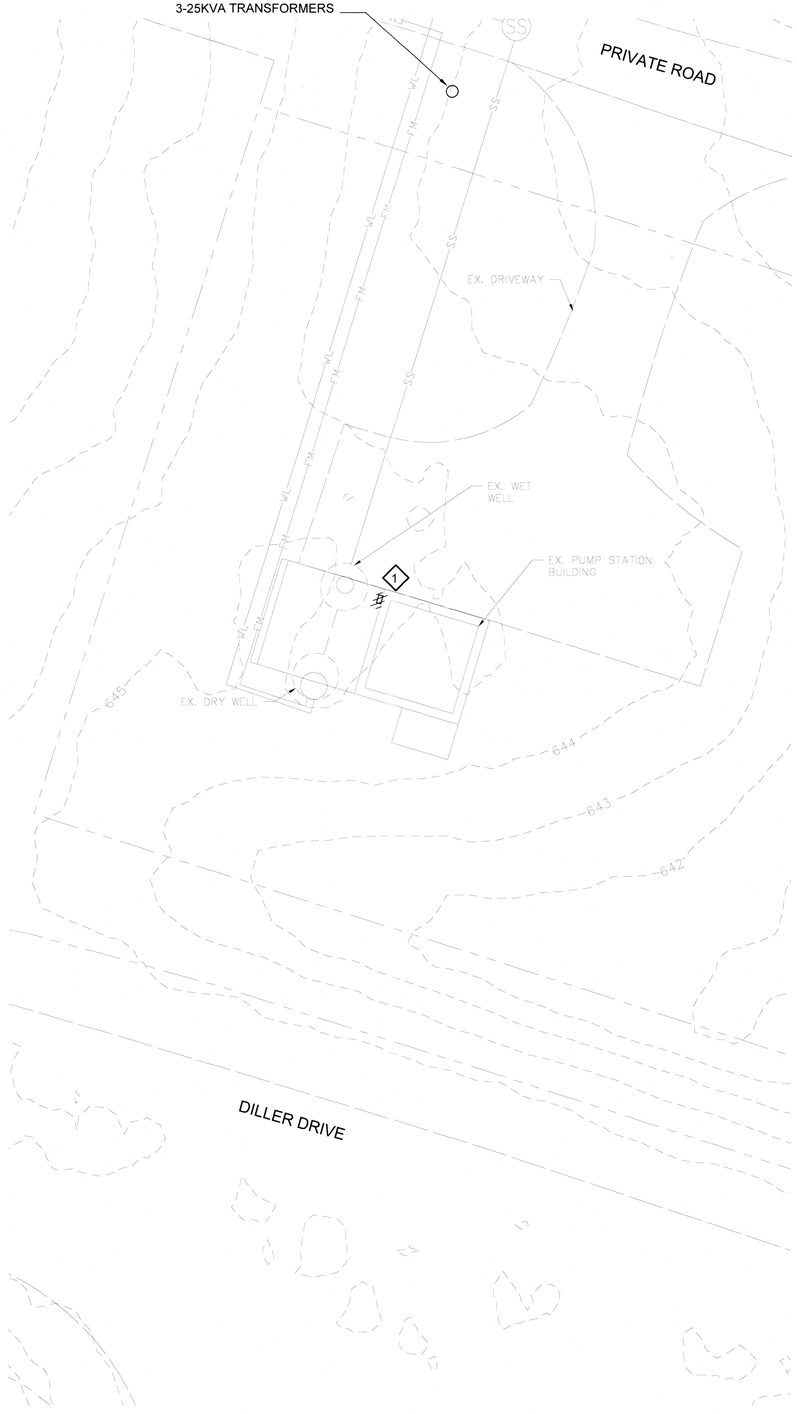


**ELECTRICAL SITE PLAN-DEMOLITION**
SCALE: 1" = 10'-0"

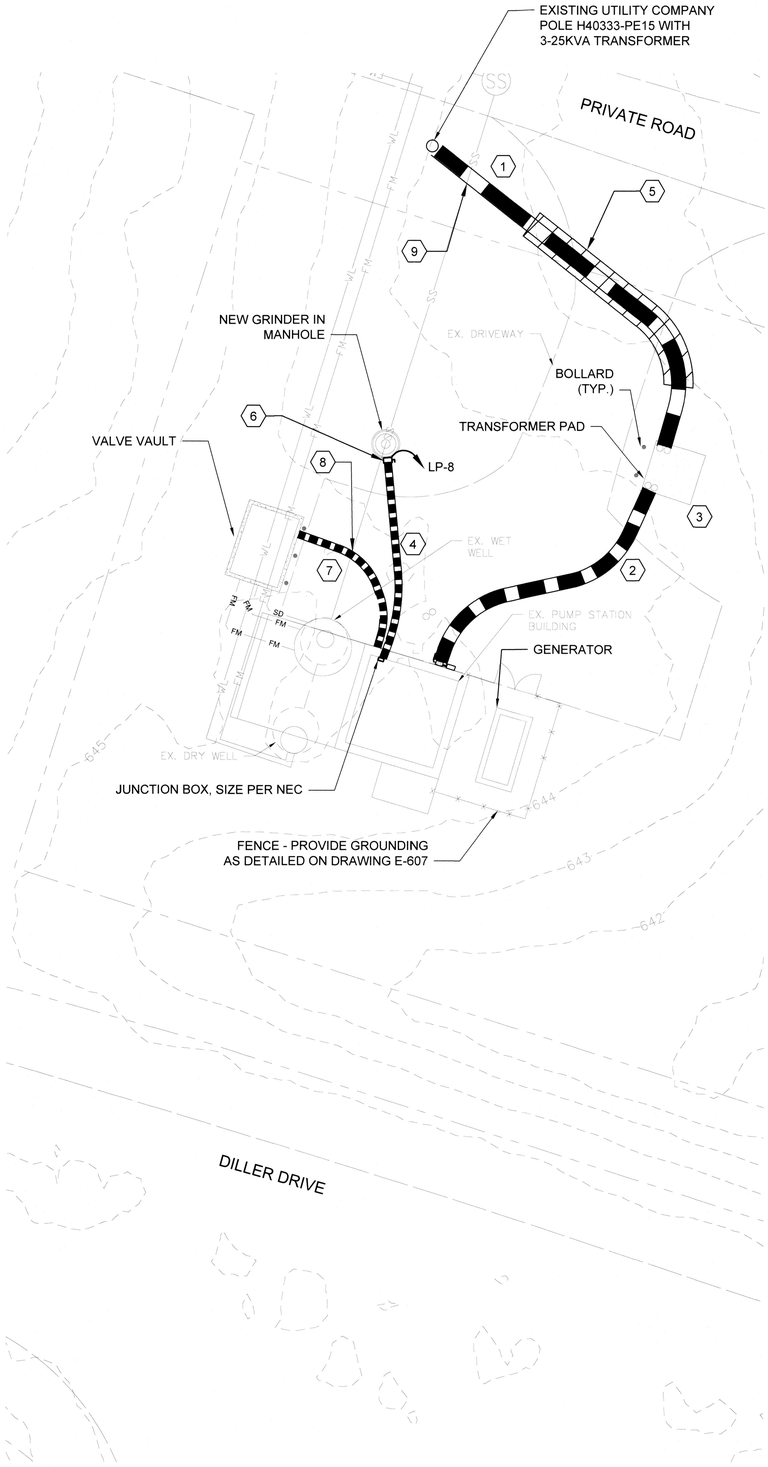


**ELECTRICAL SITE PLAN-NEW WORK**
SCALE: 1" = 10'-0"

## GENERAL NOTES:

1. REFER TO DRAWING E-107 FOR LOCATION OF PANEL LP.
2. REFER TO DRAWING E-602 FOR PANEL LP SCHEDULE.
3. REFER TO DRAWING E-608 FOR DUCTBANK AND TRENCHING DETAILS.
4. ALL WIRING INSIDE WETWELL, VAULT AND MANHOLE SHALL BE SUITABLE FOR CLASS 1 DIVISION 1 PER NEC. PROVIDE EXPLOSION PROOF SEAL USING PVC COATED RGS.
5. WIRING INSIDE VAULT SHALL BE SUITABLE FOR CLASS 1 DIVISION 2 PER NEC. PROVIDE EXPLOSION PROOF SEAL USING PVC COATED RGS.

## SPECIFIC NOTES NEW WORK (X):

1. 2 WAY 5" PVC DIRECT BURIED, 36" UNDERGROUND DUCTBANK FOR UTILITY COMPANY PRIMARY FEED. REFER TO TRENCHING DETAIL 7 ON DRAWING E-608.
2. 2-WAY 5" PVC SCHEDULE 40 DIRECT BURIED DUCTBANK 36" UNDERGROUND FOR UTILITY COMPANY SECONDARY FEED. CONTRACTOR SHALL COORDINATE WITH UTILITY COMPANY FOR NEW SERVICE. REFER TO TRENCHING DETAIL 7 ON DRAWING E-608.
3. PROVIDE CONCRETE PAD FOR UTILITY COMPANY TRANSFORMER PER THEIR REQUIREMENTS. PROVIDE GROUND ROD AND GROUNDING CONNECTIONS PER COMPANY REQUIREMENTS AND NEC.
4. 3 #10 & #10G IN 2" PVC SCHEDULE 40 DUCT, DIRECT BURIED 30" UNDERGROUND FROM GRINDER CONTROL PANEL FOR GRINDER POWER. PROVIDE ADDITIONAL 1-1" FOR CONTROL WIRING.
5. DUCTBANK UNDER DRIVEWAY SHALL BE CONCRETE ENCASED. REFER TO DRAWING E-608 FOR DETAILS.
6. UNISTRUT MOUNTED 30A, 3P, 480V DISCONNECT IN NEMA 4X ENCLOSURE FOR NEW GRINDER IN THE MANHOLE. REFER DRAWING E-607 FOR DISCONNECT MOUNTING DETAILS.
7. 2-1" PVC SCHEDULE 40 DUCT, 30" UNDERGROUND DIRECT BURIED FOR POWER AND CONTROL WIRING. REFER DIRECT BURIED DUCTBANK DETAIL ON DRAWING E-608.
8. ELECTRICAL DUCTBANK SHALL CROSS ABOVE EXISTING SS GRAVITY MAIN.

GRAPHIC SCALE
0 5' 10' 20'
SCALE: 1" = 10'


DEI
DHILLON ENGINEERING INC.
10902 Reisterstown Rd, Suite 204
Owings Mills, Maryland 21117
(410) 356-1095


REVISIONS

| NO. | DATE | BY | DESCRIPTION |
|---|---|---|---|
| | | | |

DESIGN INFORMATION

| DESIGNED BY: | DRAWN BY: | CHECKED BY: | PROJECT MANAGER: |
|---|---|---|---|
| KK | KK | RK | AM |

PROFESSIONAL CERTIFICATION. I HEREBY CERTIFY THAT THESE DOCUMENTS WERE PREPARED OR APPROVED BY ME, AND THAT I AM A DULY LICENSED PROFESSIONAL ENGINEER UNDER THE LAWS OF THE STATE OF MARYLAND, LICENSE NO. 8050 EXPIRATION DATE: 08/19/2023

SEAL: STATE OF MARYLAND · CURTIS R. KOSTER · REG. NO. 8050 · PROFESSIONAL ENGINEER

WASHINGTON COUNTY DEPARTMENT OF ENGINEERING SERVICES
16232 ELLIOTT PARKWAY
WILLIAMSPORT, MD 21795
WASHINGTON COUNTY, MARYLAND

FARM LANE PUMP STATION
ELECTRICAL SITE PLAN DEMOLITION AND NEW WORK


EA Engineering, Science, and Technology, Inc., PBC
Hunt Valley Center
225 Schilling Circle, Suite 400
Hunt Valley, Maryland 21031
(410) 584-7000


DATE: APRIL 2022

PROJECT NUMBER: 1556701

**E-101**
SHEET: 59 OF 76

SP-21-025 / SWCP-21-020


FILE PATH: Z:\PROJECTS\EA\19 WASH COUNTY THREE PUMP STATIONS\04 DRAWINGS\PRODUCTION\E-101 FARM LANE SITE.DWG [E-101] OFELIA MAZA,LU 4/29/2022 2:01 PM

1 / E-102 **MAUGANSVILLE ROAD PUMP STATION ELECTRICAL SITE PLAN**

SCALE: 1" = 10'

## GENERAL NOTES:

1. REFER TO DRAWING E-110 FOR LOCATION OF PANEL LP.
2. REFER TO DRAWING E-603 FOR PANEL LP SCHEDULE.
3. REFER TO DRAWING E- 608 FOR DUCTBANK AND TRENCHING DETAILS.
4. PUMP CONTROL PANEL IS LOCATED INSIDE PUMP STATION.
5. ALL WIRING FOR WETWELL GRINDER PUMP SHALL BE SUITABLE FOR CLASS 1 DIVISION 1 PER NEC. PROVIDE EXPLOSION PROOF SEALS PER NEC.

## SPECIFIC NOTES (X):

1. EMERGENCY GENERATOR 125KW, 480/277V, 3PH, 4W WITH SUB BASE TANK FOR 24 HOURS RUN TIME ON FULL LOAD IN WEATHER PROOF SOUND ATTENUATED ENCLOSURE. PROVIDE SERVICE PLATE FORM IF HEIGHT OF GENERATOR EXCEEDS 6 FEET.
2. 4 WAY DIRECT BURIED, 30" UNDERGROUND DUCTBANK FOR EMERGENCY GENERATOR POWER. REFER TO TRENCHING DETAIL 1 ON DRAWING E-608.
3. 4-1" PVC SCHEDULE 40 DUCT DIRECT BURIED 30" UNDERGROUND FOR GRINDER AND AERATION POWER (2-1") & CONTROL WIRING (2-1") REFER TO TRENCHING DETAIL 7 ON DRAWING E-607.
4. 1-3" AND 1-1" PVC SCHEDULE 40 DUCT DIRECT BURIED 30" UNDERGROUND FOR PUMP CONTROL PANEL POWER WIRING & CONTROL WIRING. REFER TO TRENCHING DETAIL 9 ON DRAWING E-608. COORDINATE FINAL LOCATION WITH PROCESS CONTRACTOR.
5. 1-1" PVC SCHEDULE 40 DUCT DIRECT BURIED 30" UNDERGROUND FOR FLOW METER POWER. REFER TO TRENCHING DETAIL 2 ON DRAWING E-608.
6. UNISTRUT MOUNTED 30A, 3P, 480V DISCONNECT IN NEMA 4X ENCLOSURE FOR GRINDER AND CONTROL PANEL FOR AERATOR BLOWER. REFER TO DETAIL 4 ON DRAWING E-607.
7. REFER TO STRUCTURAL DRAWINGS FOR CONCRETE PAD DETAILS
8. PROVIDE TWISTED SHIELDED PAIR CABLE FROM FLOW METER TO PUMP CONTROL PANEL IN 1-1" UNDERGROUND PVC SCHEDULE 40 DUCT FOR M-20mA SIGNAL.

GRAPHIC SCALE

0 5' 10' 20'

SCALE: 1" = 10'

REVISIONS

| NO. | DATE | BY | DESCRIPTION |
|---|---|---|---|
| | | | |

DESIGN INFORMATION

| DESIGNED BY: | DRAWN BY: | CHECKED BY: | PROJECT MANAGER: |
|---|---|---|---|
| KK | KK | RK | AM |

PROFESSIONAL CERTIFICATION. I HEREBY CERTIFY THAT THESE DOCUMENTS WERE PREPARED OR APPROVED BY ME, AND THAT I AM A DULY LICENSED PROFESSIONAL ENGINEER UNDER THE LAWS OF THE STATE OF MARYLAND, LICENSE NO. 8050 EXPIRATION DATE: 08/19/2023

SEAL

STATE OF MARYLAND · GURMEET SINGH · REGISTERED · NO. 8050 · PROFESSIONAL ENGINEER · 4/29/22

WASHINGTON COUNTY DEPARTMENT OF ENGINEERING SERVICES
16232 ELLIOTT PARKWAY
WILLIAMSPORT, MD 21795
WASHINGTON COUNTY, MARYLAND

MAUGANSVILLE ROAD PUMP STATION
ELECTRICAL SITE PLAN


EA Engineering, Science, and Technology, Inc., PBC
Hunt Valley Center
225 Schilling Circle, Suite 400
Hunt Valley, Maryland 21031
(410) 584-7000


DATE: APRIL 2022

PROJECT NUMBER: 1556701

**E-102**

SHEET: 60 OF 76


DHILLON ENGINEERING INC.
10902 Reisterstown Rd, Suite 204
Owings Mills, Maryland 21117
(410) 356-1095


SP-21-025 / SWCP-21-020


FILE PATH: Z:\PROJECTS\EA\19 WASH COUNTY THREE PUMP STATIONS\04 DRAWINGS\PRODUCTION\E-102 MAUGANSVILLE SITE.DWG [E-102] OFELIA MAZOLU 4/29/2022 2:15 PM

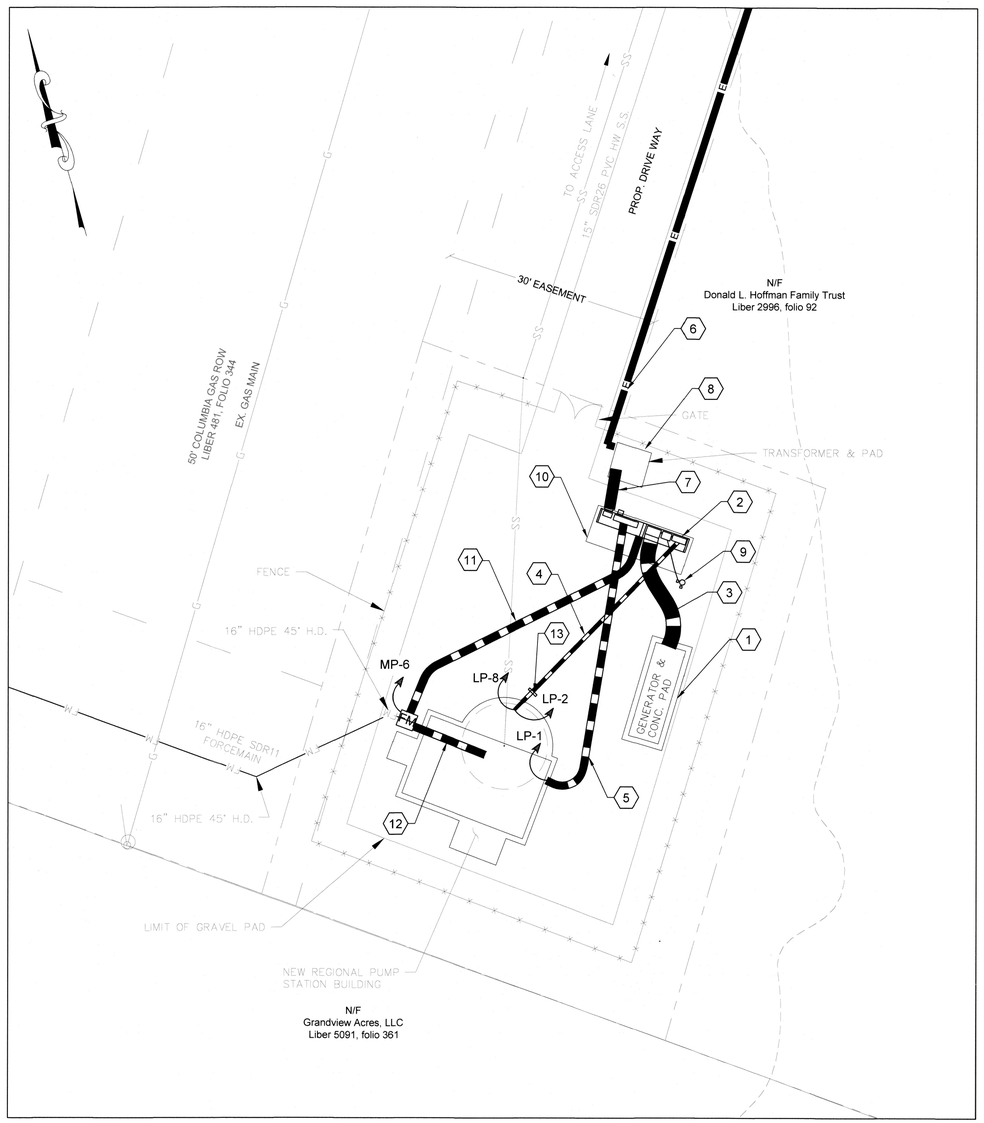


1 / E-103 **NEW REGIONAL PUMP STATION ELECTRICAL SITE PLAN**

SCALE: 1"=10'

## GENERAL NOTES:

1. PANEL LP IS LOCATED INSIDE NEMA 3RX STAINLESS ENCLOSURE. REFER TO DRAWING E-608 FOR PANEL SCHEDULE.
2. REFER TO DRAWING E-608 FOR DUCTBANK AND TRENCHING DETAILS.

## SPECIFIC NOTES (X):

1. EMERGENCY GENERATOR 230KW, 480/277V, 3PH, 4W WITH SUB BASE TANK FOR 24 HRS. RUN TIME AT FULL LOAD IN WEATHER PROOF SOUND ATTENUATED ENCLOSURE. PROVIDE MAINTENANCE PLATE FORM IF GENERATOR HEIGHT EXCEEDS 6 FEET.
2. NEMA 3RX STAINLESS STEEL 316 SS ENCLOSURE FOR ELECTRICAL PANELS. REFER TO DRAWING E-605 FOR DETAILS.
3. 4 WAY DUCTBANK FOR EMERGENCY GENERATOR. REFER TO TRENCHING DETAIL 1 ON DRAWING E-608.
4. 3-1" PVC SCHEDULE 40 DUCT DIRECT BURIED 30" UNDERGROUND FOR GRINDER & AERATOR BLOWER POWER AND CONTROL WIRING. REFER TO TRENCHING DETAIL ON DRAWING E-608.
5. 1-4" AND 1-1" P VC SCHEDULE 40 DUCT DIRECT BURIED 30" UNDERGROUND FOR PUMP CONTROL PANEL POWER AND CONTROL WIRING. REFER TO TRENCHING DETAIL ON DRAWING E-608.
6. 1 WAY 5" PVC SCHEDULE 40 DIRECT BURIED, 36" UNDERGROUND DUCTBANK FOR UTILITY COMPANY PRIMARY FEED. REFER TO TRENCHING DETAIL 7 ON DRAWING E-608.
7. 2-WAY 5" PVC SCHEDULE 40 DIRECT BURIED DUCTBANK FOR UTILITY COMPANY SECONDARY FEED. CONTRACTOR SHALL COORDINATE WITH UTILITY COMPANY FOR NEW SERVICE. REFER TO TRENCHING DETAIL 7 ON DRAWING E-608.
8. PROVIDE CONCRETE PAD FOR UTILITY COMPANY TRANSFORMER PER THEIR REQUIREMENTS. PROVIDE GROUND ROD AND GROUNDING CONNECTIONS PER COMPANY REQUIREMENTS AND NEC.
9. PROVIDE HUBBELL LIGHTING 15' POLE CATALOG NUMBER SSA-B-16-40-A2L-B3-DB OR APPROVED EQUAL WITH 2 NUMBERS LIGHTING FIXTURE CATALOG NUMBER ASL-A16L-3-4K-210-3-U-BZ OR APPROVED EQUAL. THE LIGHTING SHALL BE CONTROLLED THROUGH ENCLOSURE MOUNTED SWITCH. USE 2 #12 & #12G IN 1" UNDERGROUND CONDUIT.
10. CONCRETE PAD FOR ELECTRICAL PANELBOARD ENCLOSURE. REFER STRUCTURAL DRAWING FOR PAD DETAILS.
11. 1-1" PVC SCHEDULE 40 DUCT DIRECT BURIED 30" UNDERGROUND FOR FLOW METER POWER. REFER TO TRENCHING DETAIL ON DRAWING E-608.
12. PROVIDE TWISTED SHIELDED PAIR CABLE BETWEEN FLOW METER TO PUMP CONTROL PANEL IN 1" PVC SCH 40 DUCT, DIRECT BURIED, 30" UNDERGROUND. COORDINATE LOCATION WITH PUMP CONTROL PANEL.
13. UNISTRUT MOUNTED AERATOR BLOWER CONTROL PANEL. REFER DRAWING E-607 FOR MOUNTED DETAILS.

GRAPHIC SCALE

0 5' 10' 20'

SCALE: 1" = 10'

REVISIONS

| NO. | DATE | BY | DESCRIPTION |
|---|---|---|---|

DESIGN INFORMATION

| DESIGNED BY: | DRAWN BY: | CHECKED BY: | PROJECT MANAGER: |
|---|---|---|---|
| KK | KK | RK | AM |

PROFESSIONAL CERTIFICATION. I HEREBY CERTIFY THAT THESE DOCUMENTS WERE PREPARED OR APPROVED BY ME, AND THAT I AM A DULY LICENSED PROFESSIONAL ENGINEER UNDER THE LAWS OF THE STATE OF MARYLAND, LICENSE NO. 8050 EXPIRATION DATE: 08/19/2023

SEAL

STATE OF MARYLAND · CHARLES SUMMET STRAUSS · REGISTERED · NO. 8050 · PROFESSIONAL ENGINEER

WASHINGTON COUNTY DEPARTMENT OF ENGINEERING SERVICES
16232 ELLIOTT PARKWAY
WILLIAMSPORT, MD 21795
WASHINGTON COUNTY, MARYLAND

NEW REGIONAL PUMP STATION
ELECTRICAL SITE PLAN - I

DHILLON ENGINEERING INC.
10902 Reisterstown Rd, Suite 204
Owings Mills, Maryland 21117
(410) 356-1095

EA Engineering, Science, and Technology, Inc., PBC
Hunt Valley Center
225 Schilling Circle, Suite 400
Hunt Valley, Maryland 21031
(410) 584-7000

DATE: APRIL 2022

PROJECT NUMBER: 1556701

E-103
SHEET: 61 OF 76

SP-21-025 / SWCP-21-020

FILE PATH: Z:\PROJECTS\EA\13 WASH COUNTY THREE PUMP STATIONS\04 DRAWINGS\PRODUCTION\E-103 NEW REGIONAL PS DWG [E-103] OFELIA MAZILU 4/29/2022 2:16 PM

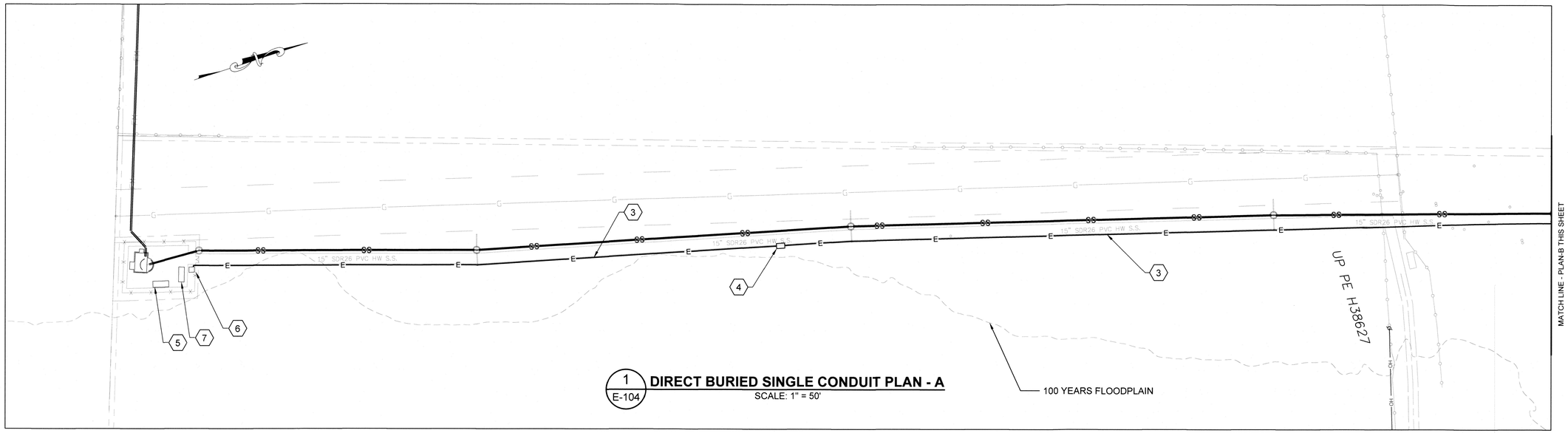


1 E-104 **DIRECT BURIED SINGLE CONDUIT PLAN - A**
SCALE: 1" = 50'

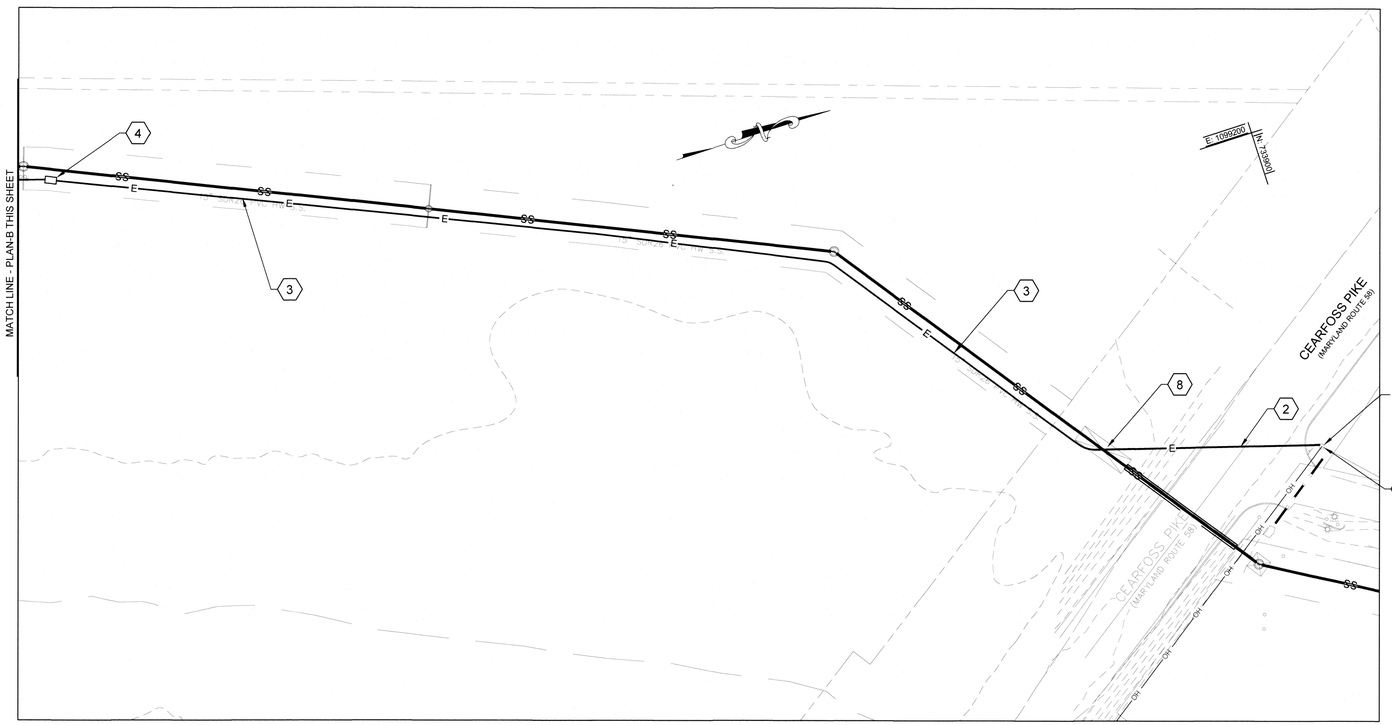


2 E-104 **DIRECT BURIED SINGLE CONDUIT PLAN - B**
SCALE: 1" = 50'

## SPECIFIC NOTES (X):

1. EXISTING UTILITY COMPANY POLE MEDIUM VOLTAGE OVERHEAD LINE.
2. 1-5" CONDUIT UNDER CEARFOSS PIKE SHALL BE VIA DIRECTIONAL DRILLING. MINIMUM COVER AT CEARFOSS PIKE CROSSING SHALL BE 60".
3. PROVIDE 1-5" PVC SCH 40 DIRECT BURIED CONDUIT, MINIMUM 36" COVER, FOR PRIMARY FEEDER. SEE DETAIL 2 ON DRAWING E-608. COORDINATE WITH UTILITY COMPANY FOR NEW SERVICE.
4. INSTALL MEDIUM VOLTAGE SECTIONALIZING CABINET PROVIDED BY UTILITY COMPANY. SECTIONALIZING SWITCHES SHALL BE INSTALLED ON CONCRETE PAD PER UTILITY COMPANY REQUIREMENTS.
5. CONCRETE PAD FOR GENERATOR. REFER STRUCTURAL DRAWINGS FOR PAD DETAILS.
6. PROVIDE CONCRETE PAD FOR UTILITY COMPANY TRANSFORMER AS PER UTILITY COMPANY REQUIREMENTS.
7. CONCRETE PAD FOR ELECTRICAL PANELBOARD. REFER TO STRUCTURAL DRAWINGS FOR PAD DETAILS.
8. PROVIDE MINIMUM ONE (1) FOOT VERTICAL SEPARATION WHERE ELECTRICAL CONDUIT CROSSES OVER PROPOSED SANITARY LINE.

GRAPHIC SCALE
0 25' 50' 100'
SCALE: 1" = 50'

REVISIONS

| NO. | DATE | BY | DESCRIPTION |
|---|---|---|---|

DESIGN INFORMATION
DESIGNED BY: KK
DRAWN BY: KK
CHECKED BY: RK
PROJECT MANAGER: AM

PROFESSIONAL CERTIFICATION. I HEREBY CERTIFY THAT THESE DOCUMENTS WERE PREPARED OR APPROVED BY ME, AND THAT I AM A DULY LICENSED PROFESSIONAL ENGINEER UNDER THE LAWS OF THE STATE OF MARYLAND, LICENSE NO. 8050 EXPIRATION DATE: 08/19/2023

SEAL

STATE OF MARYLAND · GUNEET SINGH CHILANA · REG. NO. 8050 · PROFESSIONAL ENGINEER

WASHINGTON COUNTY DEPARTMENT OF ENGINEERING SERVICES
16232 ELLIOTT PARKWAY
WILLIAMSPORT, MD 21795
WASHINGTON COUNTY, MARYLAND

NEW REGIONAL PUMP STATION
ACCESS DRIVEWAY ELECTRICAL SITE PLAN - II

DHILLON ENGINEERING INC.
10902 Reisterstown Rd, Suite 204
Owings Mills, Maryland 21117
(410) 356-1095

EA Engineering, Science, and Technology, Inc., PBC
Hunt Valley Center
225 Schilling Circle, Suite 400
Hunt Valley, Maryland 21031
(410) 584-7000

DATE: APRIL 2022
PROJECT NUMBER: 1556701

E-104
SHEET: 62 OF 76

SP-21-025 / SWCP-21-020

FILE PATH: Z:\PROJECTS\EA\13 WASH COUNTY THREE PUMP STATIONS\04 DRAWINGS\PRODUCTION\E-104 NEW REGIONAL OVERALL SITE PLAN.DWG[E-104] OFELIA MAZILU 4/25/2022 2:18 PM

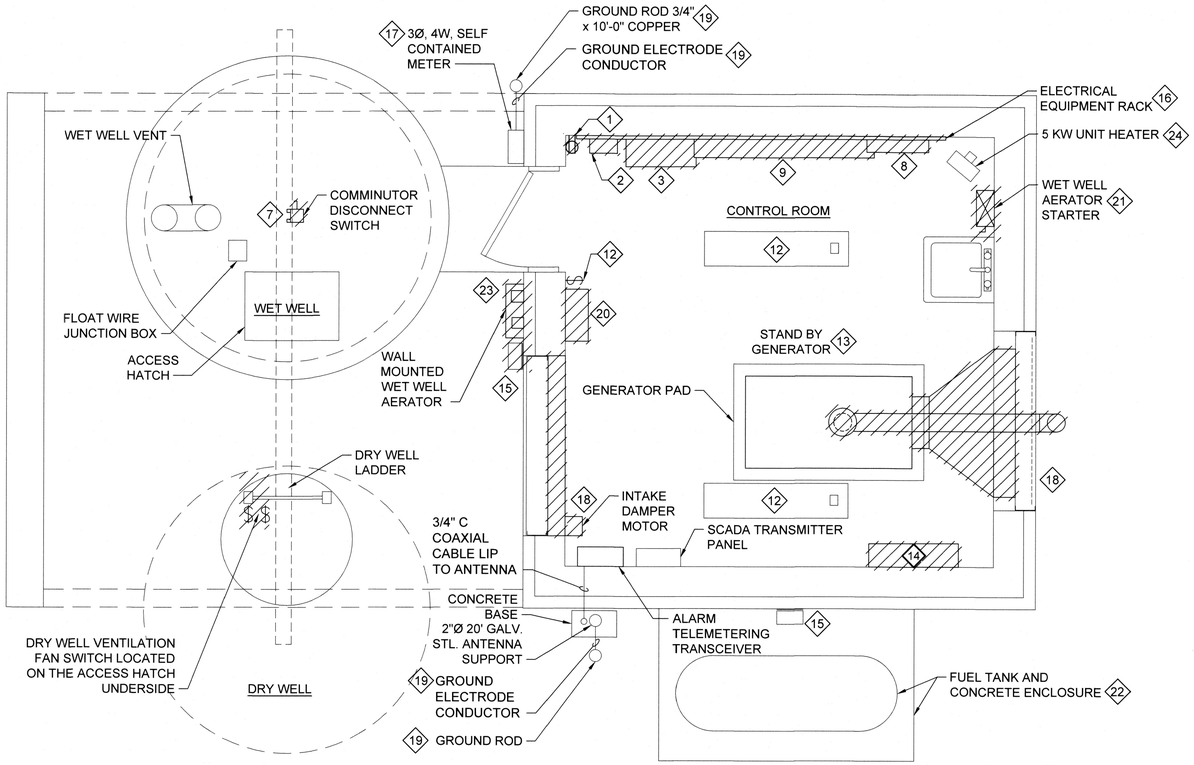


1 E-105 **PUMP STATION ELECTRICAL PLAN - DEMOLITION**

SCALE: 1/2" = 1'-0"

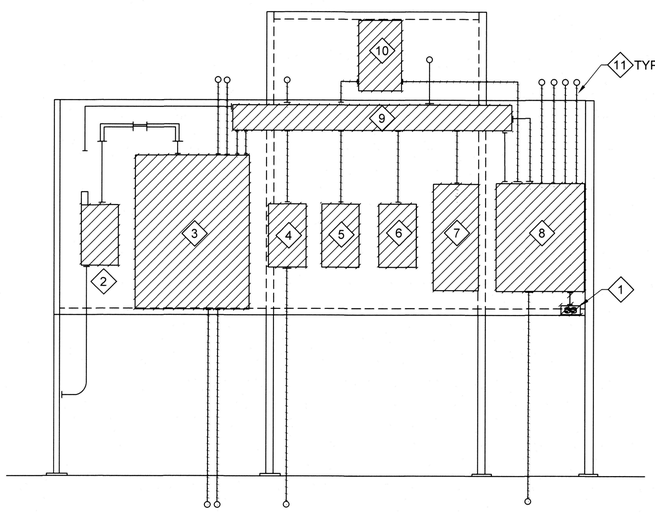


2 E-105 **ELECTRICAL EQUIPMENT ELEVATION - DEMOLITION**

NOT TO SCALE

## GENERAL NOTES:

1. EQUIPMENT SHOWN HATCHED/TO BE REMOVED SHALL BE REMOVED ALONG WITH WIRING AND RACEWAY BACK TO SOURCE.

## DEMOLITION NOTES (X):

1. REMOVE EXISTING CONVENIENCE RECEPTACLE.
2. REMOVE SERVICE ENTRANCE TYPE BREAKER WITH SPD.
3. REMOVE AUTOMATIC TRANSFER SWITCH.
4. REMOVE DRY WELL CONTROL PANEL BREAKER.
5. REMOVE TRANSFORMER BREAKER.
6. REMOVE UNIT HEATER BREAKER.
7. REMOVE GRINDER DISCONNECT AND CONTROL PANEL.
8. REMOVE DISTRIBUTION PANEL BOARD.
9. REMOVE WIRE TROUGH.
10. REMOVE WALL MOUNTED TRANSFORMER.
11. REMOVE ALL EXISTING RACEWAY, AND WIRES.
12. REMOVE EXISTING LIGHT SWITCH, FLUORESCENT LIGHTING AND WALL MOUNTED LIGHTING FIXTURES.
13. REMOVE EXISTING 30KW EMERGENCY GENERATOR ALONG WITH ASSOCIATED CONTROL PANEL, CIRCUIT BREAKER, RACEWAY, WIRING, ETC.
14. REMOVE EXISTING WALL MOUNTED FUEL DAY TANK, FUEL PIPING, ELECTRICAL WIRING, ETC. FOR GENERATOR.
15. REMOVE EXISTING WALL PACK LIGHT FIXTURES.
16. REMOVE EXISTING WALL MOUNTED ELECTRICAL EQUIPMENT, BOARD AND, FRAME.
17. EXISTING UTILITY METER. CONTACT UTILITY COMPANY FOR ITS REMOVAL.
18. REMOVE EXISTING INTAKE DAMPER OPERATOR, WIRING, ETC.
19. REMOVE EXISTING GROUNDING SYSTEM. ABANDON UNDERGROUND WIRES.
20. REMOVE EXISTING COMMINUTOR CONTROL PANEL ALONG WITH ASSOCIATED WIRING, ETC. UP TO SOURCE PANEL.
21. REMOVE EXISTING WET WELL AERATOR AND COMBINATION STARTER.
22. EXISTING FUEL TANK, AND ITS CONCRETE ENCLOSURE TO BE ABANDONED IN PLACE. REMOVE ALL EXISTING FUEL PIPES, VALVES, ETC.
23. REMOVE EXISTING DISCONNECT, WIRING AND CONDUIT FOR WET WELL AERATOR.
24. REMOVE WIRING AND RACEWAY FOR UNIT HEATER BACK TO SOURCE

GRAPHIC SCALE

0 1' 2' 4'

SCALE: 1/2" = 1'-0"

REVISIONS

| NO. | DATE | BY | DESCRIPTION |
|---|---|---|---|
| | | | |

DESIGN INFORMATION

| DESIGNED BY: | DRAWN BY: | CHECKED BY: | PROJECT MANAGER: |
|---|---|---|---|
| RK | KK | RK | AM |

PROFESSIONAL CERTIFICATION. I HEREBY CERTIFY THAT THESE DOCUMENTS WERE PREPARED OR APPROVED BY ME, AND THAT I AM A DULY LICENSED PROFESSIONAL ENGINEER UNDER THE LAWS OF THE STATE OF MARYLAND, LICENSE NO. 8050 EXPIRATION DATE: 08/19/2023

SEAL: STATE OF MARYLAND · QUINCEY S. WATSON · REGISTERED · NO. 8050 · PROFESSIONAL ENGINEER

WASHINGTON COUNTY DEPARTMENT OF ENGINEERING SERVICES
16232 ELLIOTT PARKWAY
WILLIAMSPORT, MD 21795
WASHINGTON COUNTY, MARYLAND

FARM LANE PUMP STATION
ELECTRICAL DEMOLITION PLAN - I

DHILLON ENGINEERING INC.
10902 Reisterstown Rd, Suite 204
Owings Mills, Maryland 21117
(410) 356-1095

EA Engineering, Science, and Technology, Inc., PBC
Hunt Valley Center
225 Schilling Circle, Suite 400
Hunt Valley, Maryland 21031
(410) 584-7000

DATE: APRIL 2022

PROJECT NUMBER: 1556701

**E-105**

SHEET: 63 OF 76

SP-21-025 / SWCP-21-020

FILE PATH: Z:\PROJECTS\EA\19 WASH COUNTY THREE PUMP STATIONS\04 DRAWINGS\BASES\1556701_TB 2020.DWG [MODEL] OFELIA MAZALU 07/27/2019 3:39 PM

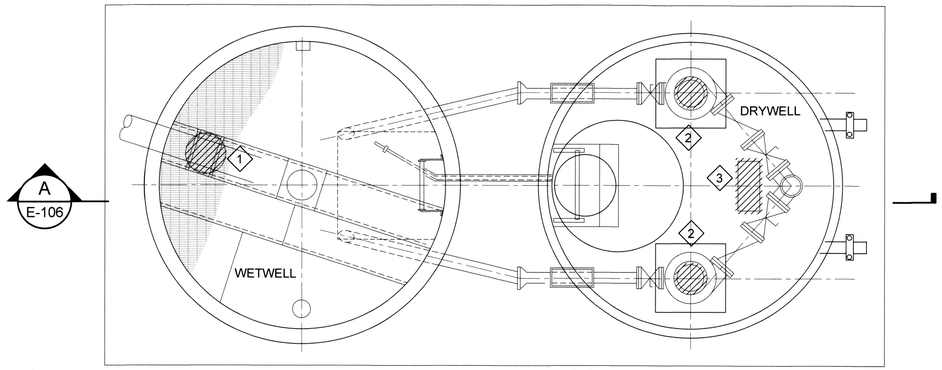


## SECTIONAL PLAN PUMP STATION & WET WELL

SCALE: 1/2" = 1'-0"

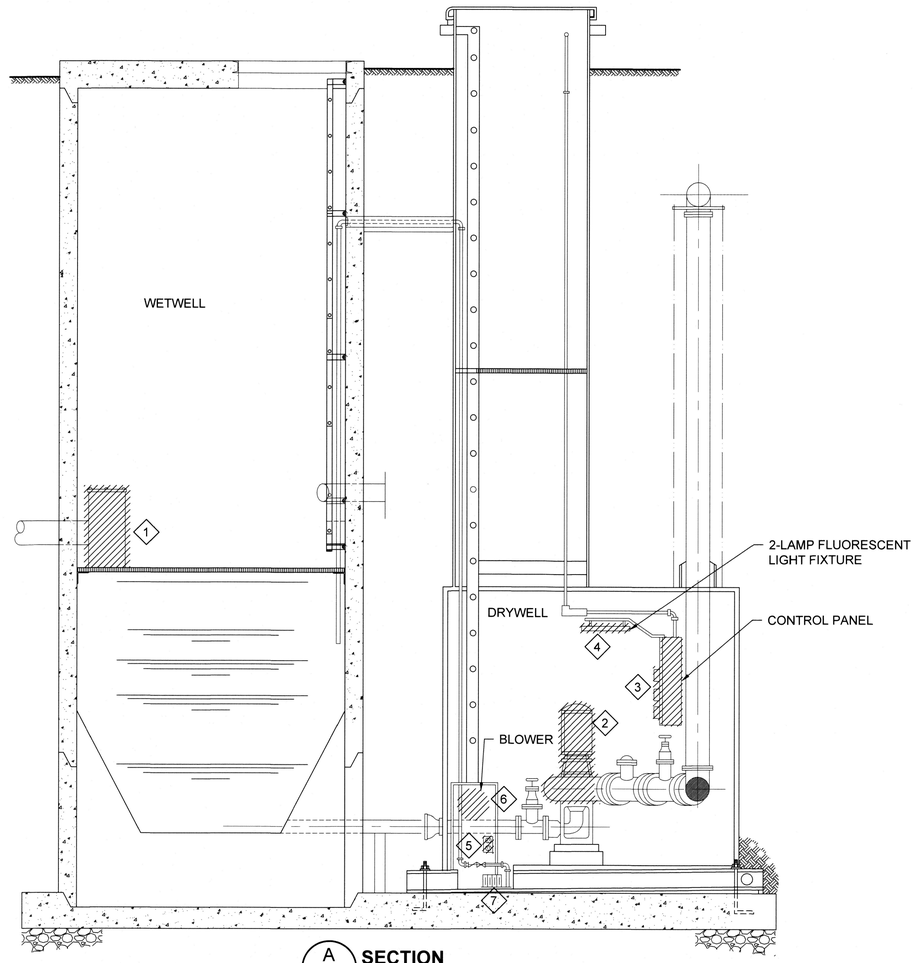


A E-106 **SECTION**

SCALE: 1/2" = 1'-0"

## SPECIFIC NOTES (X):

1. REMOVE EXISTING GRINDER RACEWAY AND WIRING UP TO SOURCE PANEL.
2. REMOVE EXISTING SEWAGE PUMPS RACEWAY AND WIRING UP TO SOURCE PANEL.
3. REMOVE EXISTING PUMP CONTROL PANEL ALONG WITH RACEWAY AND WIRING UP TO SOURCE PANELS.
4. REMOVE EXISTING DRY WELL LIGHT FIXTURE.
5. REMOVE EXISTING SURFACE MOUNTED RECEPTACLE.
6. REMOVE EXISTING WIRING, RACEWAY, ETC. FROM DRY WELL BLOWER TO SOURCE PANEL.
7. REMOVE EXISTING WIRING, RACEWAY, ETC. FROM SUMP PUMP TO SOURCE PANEL.

GRAPHIC SCALE

0 1' 2' 4'

SCALE: 1/2" = 1'-0"

REVISIONS

| NO. | DATE | BY | DESCRIPTION |
|---|---|---|---|
| | | | |

DESIGN INFORMATION

| DESIGNED BY: | DRAWN BY: | CHECKED BY: | PROJECT MANAGER: |
|---|---|---|---|
| KK | KK | RK | AM |

PROFESSIONAL CERTIFICATION. I HEREBY CERTIFY THAT THESE DOCUMENTS WERE PREPARED OR APPROVED BY ME, AND THAT I AM A DULY LICENSED PROFESSIONAL ENGINEER UNDER THE LAWS OF THE STATE OF MARYLAND, LICENSE NO. 8050 EXPIRATION DATE: 08/19/2023

SEAL

STATE OF MARYLAND · GEORGE E. KOLLER · REGISTERED · NO. 22088 · PROFESSIONAL ENGINEER

WASHINGTON COUNTY DEPARTMENT OF ENGINEERING SERVICES
16232 ELLIOTT PARKWAY
WILLIAMSPORT, MD 21795
WASHINGTON COUNTY, MARYLAND

FARM LANE PUMP STATION
ELECTRICAL DEMOLITION PLAN - II


DHILLON ENGINEERING INC.
10902 Reisterstown Rd, Suite 204
Owings Mills, Maryland 21117
(410) 356-1095

EA Engineering, Science, and Technology, Inc., PBC
Hunt Valley Center
225 Schilling Circle, Suite 400
Hunt Valley, Maryland 21031
(410) 584-7000


DATE: APRIL 2022

PROJECT NUMBER: 1556701

**E-106**

SHEET: 64 OF 76

SP-21-025 / SWCP-21-020

FILE PATH: Z:\PROJECTS\EA\19 WASH COUNTY THREE PUMP STATIONS\04 DRAWINGS\BASE\E1105070_TB 2020.DWG [MODEL] OF ELIA MAZILU 5/17/2019 3:38 PM

## GENERAL NOTES:

1. REFER TO DRAWING E-001 FOR ELECTRICAL GENERAL NOTES, LEGENDS, ABBREVIATIONS.
2. WET WELL IS CLASSIFIED CLASS 1 DIVISION 1 AREA. ALL WIRING INSIDE WET WELL SHALL BE SUITABLE FOR THIS CLASSIFICATION. PROVIDE EXPLOSION PROOF SEAL USING PVC COATED RGS CONDUIT.
3. REFER TO DRAWING E-608 FOR DUCTBANK AND TRENCHING DETAILS.

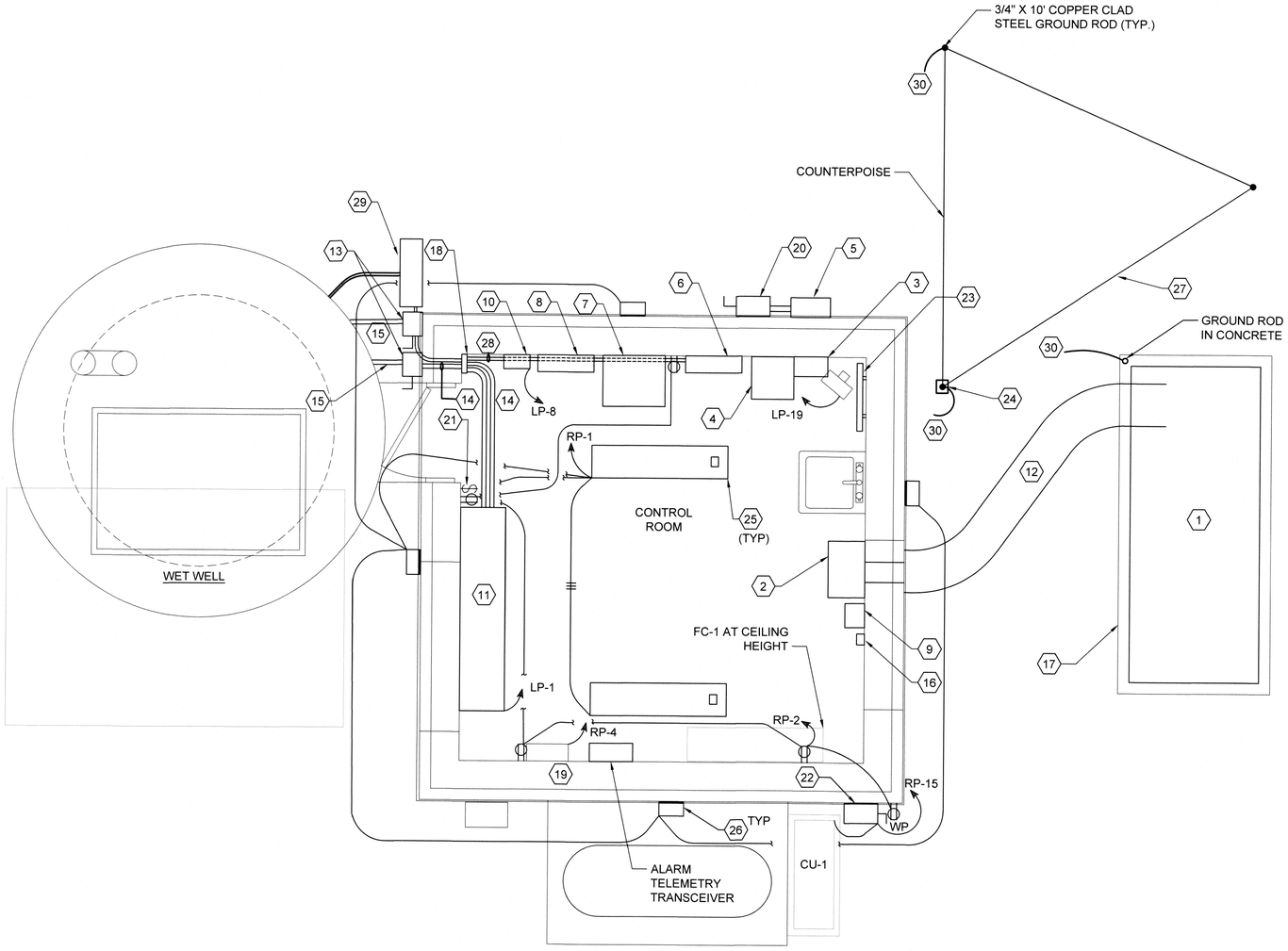


## ELECTRICAL NEW WORK PLAN-1

SCALE 1/2" = 1'-0"

## SPECIFIC NOTES (X):

1. EMERGENCY GENERATOR 180KW, 480/277V, 3PH, 4W WITH SUB BASE TANK FOR 24 HOURS RUN TIME ON FULL LOAD IN WEATHER PROOF SOUND ATTENUATED ENCLOSURE. PROVIDE SERVICE PLATFORM IF HEIGHT OF GENERATOR EXCEEDS 6 FEET.
2. 300A, 480V, 3P AUTOMATIC TRANSFER SWITCH IN NEMA-1 ENCLOSURE, 18" AFF.
3. TYPE 1 SPD IN NEMA-1 ENCLOSURE. THE SPD SHALL HAVE AN INTEGRAL DISCONNECT.
4. 300A, 480/277V, 3P CIRCUIT BREAKER IN NEMA-1 ENCLOSURE, SUITABLE FOR SERVICE DISCONNECT.
5. PROVIDE AND INSTALL 300A METER SOCKET AS PER UTILITY COMPANY REQUIREMENTS. METER TO BE PROVIDED AND INSTALLED BY THE UTILITY COMPANY.
6. 400A, 480/277V, 3PH, 4W PANELBOARD 'LP' IN NEMA-1 ENCLOSURE, WITH BUILT SURGE PROTECTION DEVICE AND 300A, 3P MAIN CIRCUIT BREAKER.
7. WALL MOUNTED 15KVA, 480VΔ-120/208VY, 3PH VENTILATED DRY TYPE TRANSFORMER. WALL MOUNTING BRACKETS SHALL BE PROVIDED BY MANUFACTURER..
8. 100A, 120/208VY, 3PH, 4W PANELBOARD 'RP' IN NEMA-1 ENCLOSURE, WITH BUILT IN SPD AND 50A, 3P CIRCUIT BREAKER.
9. GENERATOR ANNUNCIATOR PANEL.
10. GRINDER CONTROL PANEL. POWER TO GRINDER SHALL BE THROUGH THIS CONTROL PANEL
11. PUMP CONTROL PANEL PROVIDED BY OTHERS AND INSTALLED BY CONTRACTOR.
12. 4 WAY DUCTBANK FOR EMERGENCY GENERATOR. REFER TO TRENCHING DETAIL 1 ON DRAWING E-608.
13. UNSTRUT MOUNTED 100A, 3P, 480V DISCONNECT IN NEMA 4X ENCLOSURE FOR SEWAGE PUMP. REFER TO DRAWING E-607 FOR MOUNTING DETAILS.
14. 3 #2 & #6G IN 1 1/2" SURFACE MOUNTED CONDUIT IN CONTROL ROOM.
15. 3 #2 & #6G IN 2" PVC COATED RGS DIRECT BURIED, 24" UNDERGROUND FOR SUBMERSIBLE PUMPS. PROVIDE EXPLOSION PROOF SEALS PER NEC.
16. GENERATOR EMERGENCY SHUT OFF PUSH BUTTON.
17. CONCRETE PAD FOR GENERATOR. REFER TO STRUCTURAL DRAWING FOR DETAILS.
18. PROVIDE JUNCTION/PULL BOX, SIZE PER NEC.
19. RELOCATE EXISTING SCADA AND TELEMETRY CONTROL PANELS LONG WITH ALL WIRING AND CONTROL. MAKE THE SYSTEM OPERATIONAL AS EXISTING.
20. 400A, 480V, 3P NON-FUSED DISCONNECT PER UTILITY COMPANY REQUIREMENTS. DISCONNECT SHALL BE LOCKABLE IN OPEN AND CLOSE POSITION AND SHALL HAVE PROVISION FOR COMPANY SEAL AND/OR PADLOCK. REFER TO DETAIL 10 ON DRAWING E-608 FOR DISCONNECT AND METER MOUNTING.
21. PROVIDE 120/277V, 1P NEW LIGHTING SWITCH.
22. WALL MOUNTED 30A, 208V, 2P DISCONNECT IN NEMA 4X ENCLOSURE FOR HP-1. CONNECT INDOOR UNIT FC-1 THROUGH OUTDOOR UNIT PER MANUFACTURER'S REQUIREMENTS.
23. 30"x2"x1/4" THICK COPPER GROUND BAR. REFER TO DETAIL 4, 5 & 6 ON DRAWING E-608 FOR MOUNTING.
24. GROUND TEST WELL.
25. PROVIDE SURFACE MOUNTED LED 2' X 4' LIGHTING FIXTURE FROM COLUMBIA LIGHTING CATALOG NUMBER LXEM-4-35-ML-DCA-E-U-ELL14 WITH EMERGENCY BATTERY PACK OR APPROVED EQUAL.
26. PROVIDE WALL MOUNTED HUBBELL LED FIXTURE CATALOG NUMBER WGH-81L-4K-U-5 OR APPROVED EQUAL, 8' AFF SUITABLE FOR WET LOCATION WITH PHOTOCELL.
27. #4/0 BARE COPPER GROUND CONDUCTOR 30" UNDERGROUND.
28. 3 #12 & #12G IN 3/4"C FOR AERATOR BLOWER VIA CONTROL PANEL. PROVIDE 1" PVC COATED RGS, DIRECT BURIED FROM CONTROL PANEL TO AERATOR BLOWER. PROVIDE EXPLOSION PROOF SEAL AS PER NEC.
29. UNISTRUT MOUNTED AERATION BLOWER CONTROL PANEL. REFER DETAIL 5 ON DRAWING E-607 FOR MOUNTING.
30. #4/0 COPPER GROUND CONDUCTOR 30" UNDERGROUND, DIRECT BURIED TO GROUND BAR IN ELECTRICAL ROOM.

GRAPHIC SCALE
0 1' 2' 4'
SCALE: 1/2" = 1'-0"


DHILLON ENGINEERING INC.
10902 Reisterstown Rd, Suite 204
Owings Mills, Maryland 21117
(410) 356-1095


REVISIONS

| NO. | DATE | BY | DESCRIPTION |
|---|---|---|---|

DESIGN INFORMATION: DESIGNED BY: KK | DRAWN BY: KK | CHECKED BY: RK | PROJECT MANAGER: AM

PROFESSIONAL CERTIFICATION. I HEREBY CERTIFY THAT THESE DOCUMENTS WERE PREPARED OR APPROVED BY ME, AND THAT I AM A DULY LICENSED PROFESSIONAL ENGINEER UNDER THE LAWS OF THE STATE OF MARYLAND, LICENSE NO. 8050 EXPIRATION DATE: 08/19/2023

SEAL

WASHINGTON COUNTY DEPARTMENT OF ENGINEERING SERVICES
16232 ELLIOTT PARKWAY
WILLIAMSPORT, MD 21795
WASHINGTON COUNTY, MARYLAND

FARM LANE PUMP STATION
ELECTRICAL NEW WORK PLAN - CONTROL ROOM


EA Engineering, Science, and Technology, Inc., PBC
Hunt Valley Center
225 Schilling Circle, Suite 400
Hunt Valley, Maryland 21031
(410) 584-7000


DATE: APRIL 2022

PROJECT NUMBER: 1556701

E-107

SHEET: 65 OF 76

SP-21-025 / SWCP-21-020


FILE PATH: Z:\PROJECTS\EA-I\I WASH COUNTY THREE PUMP STATIONS\04 DRAWINGS\BASE\155670_1_TB 2020 DWG [MODEL] (KYLE.MAZELIS 8/17/2023 3:38 PM

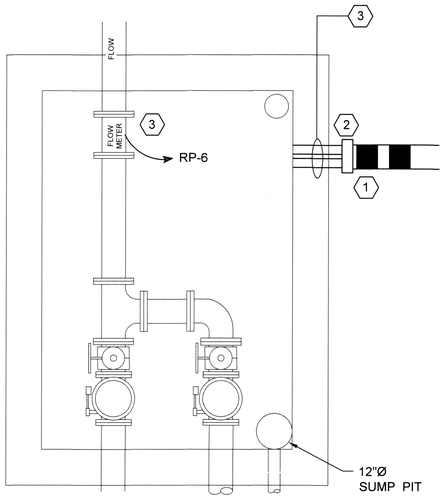


1 / E-108 **UNDERGROUND VALVE VAULT NEW WORK PLAN**

SCALE: 1/2" = 1'-0"

## GENERAL NOTES:

1. REFER TO DRAWING E-001 FOR ELECTRICAL GENERAL NOTES, LEGENDS AND ABBREVIATIONS.
2. REFER TO DRAWING E107 FOR LOCATION OF PANEL LP AND RP.
3. REFER TO DRAWING E-602 FOR PANEL RP SCHEDULE.
4. ALL CONDUIT INSIDE VAULT SHALL BE PVC COATED RGS.

## SPECIFIC NOTES ⟨X⟩:

1. 2-1", PVC SCHEDULE 40, DIRECT BURIED, 30" UNDERGROUND DUCT . REFER TO DRAWING E-608 FOR TRENCH DETAILS AND DRAWING E-101 FOR DUCTBANK ROUTING.
2. UNISTRUT MOUNTED NEMA 4X JUNCTION BOX. ALL WIRING INSIDE VALVE VAULT SHALL BE SUITABLE FOR CLASS 1 DIVISION 2 PER NEC. PROVIDE EXPLOSION PROOF SEAL USING PVC COATED RGS CONDUIT. REFER TO DRAWING TO E-607 FOR JUNCTION BOX MOUNTING DETAILS.
3. 2-1" PVC COATED RGS TO VAULT FOR FLOW METER POWER AND CONTROL.

GRAPHIC SCALE

0 1' 2' 4'

SCALE: 1/2" = 1'-0"

REVISIONS

| NO. | DATE | BY | DESCRIPTION |
|---|---|---|---|
| | | | |

DESIGN INFORMATION

| DESIGNED BY: | DRAWN BY: | CHECKED BY: | PROJECT MANAGER: |
|---|---|---|---|
| KK | KK | RK | AM |

PROFESSIONAL CERTIFICATION. I HEREBY CERTIFY THAT THESE DOCUMENTS WERE PREPARED OR APPROVED BY ME, AND THAT I AM A DULY LICENSED PROFESSIONAL ENGINEER UNDER THE LAWS OF THE STATE OF MARYLAND, LICENSE NO. 8050 EXPIRATION DATE: 08/19/2023

SEAL

STATE OF MARYLAND · ROBERT S. CHALLEN · REGISTERED NO. 8050 · PROFESSIONAL ENGINEER

WASHINGTON COUNTY DEPARTMENT OF ENGINEERING SERVICES
16232 ELLIOTT PARKWAY
WILLIAMSPORT, MD 21795
WASHINGTON COUNTY, MARYLAND

FARM LANE PUMP STATION
UNDERGROUND VAULT NEW WORK PLAN

DHILLON ENGINEERING INC.
10902 Reisterstown Rd, Suite 204
Owings Mills, Maryland 21117
(410) 356-1095

EA Engineering, Science, and Technology, Inc., PBC
Hunt Valley Center
225 Schilling Circle, Suite 400
Hunt Valley, Maryland 21031
(410) 584-7000

DATE: APRIL 2022

PROJECT NUMBER: 1556701

**E-108**

SHEET: 66 OF 76

SP-21-025 / SWCP-21-020

FILE PATH: Z:\PROJECTS\EA19 WASH COUNTY THREE PUMP STATIONS\04 DRAWINGS\BASE\1556701_19 2020.DWG [MODEL] OFELIA MAZLU 9/7/2019 3:38 PM

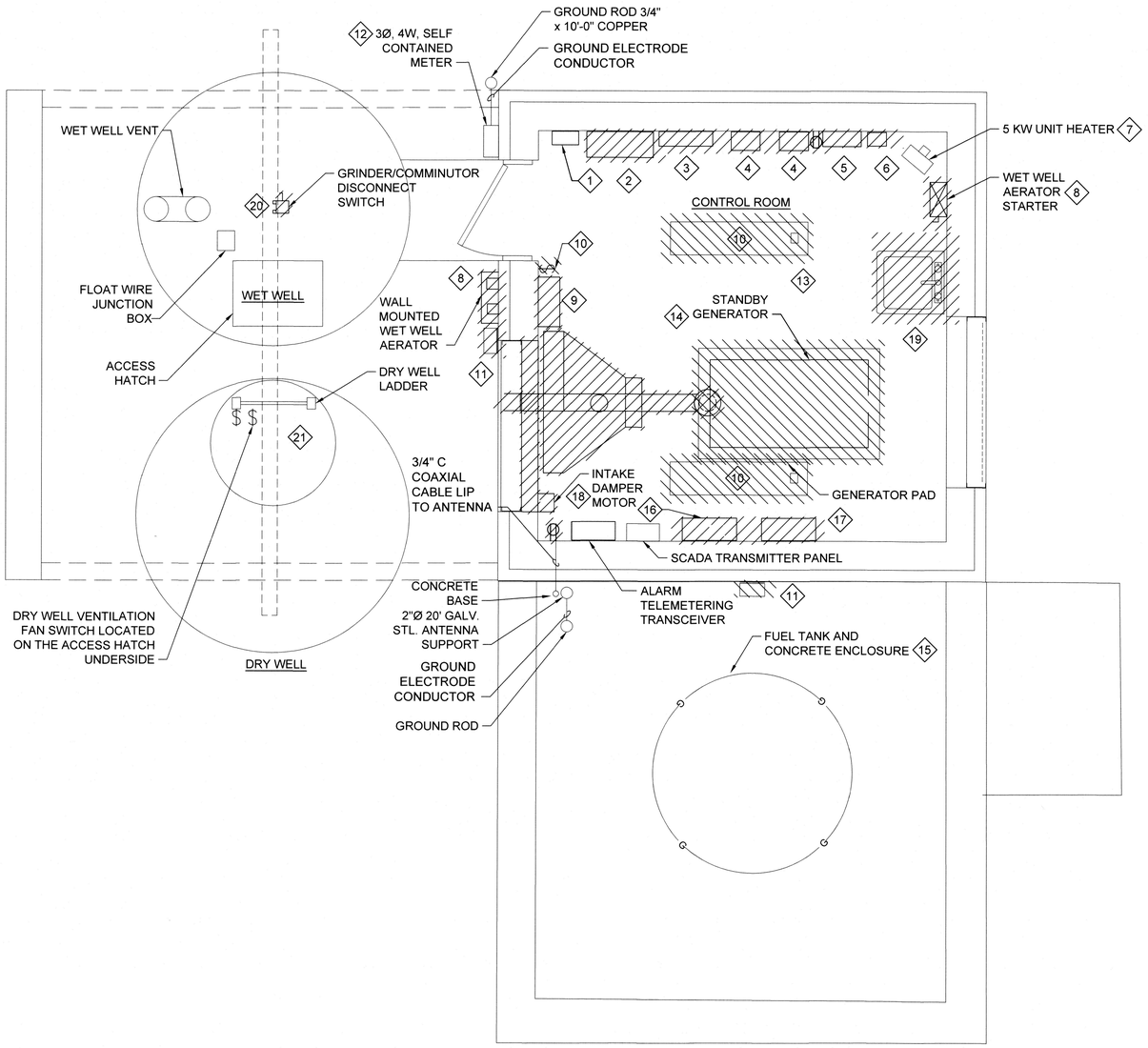


1 E-109 **PUMP STATION ELECTRICAL PLAN - DEMOLITION**

SCALE: 1/2" = 1'-0"

N

## GENERAL NOTES:

1. EQUIPMENT SHOWN HATCHED TO BE REMOVED SHALL BE REMOVED ALONG WITH WIRING AND RACEWAY BACK TO SOURCE.
2. REMOVE ALL WIRING AND SURFACE MOUNTED CONDUIT BACK TO SOURCE. ABANDON UNDERGROUND DUCT. PROVIDE WATER TIGHT CAP ON BOTH ENDS.
3. REMOVE ALL RECEPTACLE ALL WIRING AND RACEWAY BACK TO SOURCE.

## DEMOLITION NOTES (X):

1. EXISTING SERVICE ENTRANCE TYPE BREAKER WITH SPD MOUNTED ABOVE CIRCUIT BREAKER SHALL REMAIN.
2. REMOVE AUTOMATIC TRANSFER SWITCH ALONG WITH WIRING AND RACEWAY BACK TO SOURCE.
3. REMOVE EXISTING 480V, 3PH MAIN DISTRIBUTION PANEL MDPA.
4. REMOVE EXISTING VFD ALONG WITH POWER AND CONTROL WIRING.
5. REMOVE EXISTING 120/208V, 3PH PANELBOARD B.
6. REMOVE EXISTING 480-120/208V DRY TYPE TRANSFORMER.
7. REMOVE WRING, RACEWAY AND CONTROL FOR UNIT HEATER.
8. REMOVE EXISTING COMBINATION STARTER FOR AERATOR ALONG WITH AERATOR, DISCONNECT, WIRING AND RACEWAY BACK TO SOURCE.
9. REMOVE EXISTING PUMP CONTROL PANEL ALONG WITH POWER & CONTROL WIRING, RACEWAY BACK TO SOURCE.
10. REMOVE EXISTING LIGHT SWITCH, FLUORESCENT LIGHTING AND WALL MOUNTED LIGHTING FIXTURES.
11. REMOVE EXISTING WALL MOUNTED LIGHTS & CONTROL ALONG WITH WIRING AND RACEWAY BACK TO SOURCE.
12. REMOVE METER SHALL REMAIN. COORDINATE WITH UTILITY COMPANY FOR REMOVAL OF WIRE.
13. REMOVE ALL EXISTING RACEWAY, AND WIRES.
14. REMOVE EXISTING 180KW EMERGENCY GENERATOR ALONG WITH ASSOCIATED CONTROL PANEL, CIRCUIT BREAKER, RACEWAY, WIRING, ETC.
15. REMOVE EXISTING WALL MOUNTED FUEL DAY TANK, FUEL PIPING, ELECTRICAL WIRING, ETC. FOR GENERATOR.
16. REMOVE EXISTING COMMINUTOR CONTROL PANEL ALONG WITH POWER & CONTROL WIRING AND RACEWAY BACK TO SOURCE
17. REMOVE EXISTING WALL MOUNTED FUEL PUMP ALONG WITH ALL PIPING, ELECTRICAL WIRING AND AND RACEWAY BACK TO SOURCE.
18. REMOVE EXISTING INTAKE DAMPER OPERATOR, WIRING, ETC.
19. REMOVE EXISTING SINK PLUG DRAIN AND WATER SUPPLY PIPE.
20. EXISTING WET WELL GRINDER/COMMINUTOR DISCONNECT ALONG WITH WIRING, RACEWAY AND MOUNTING STRUCTURE BACK TO SOURCE.
21. REMOVE LIGHTS SWITCH, ELECTRICAL EQUIPMENT, WIRING AND CONDUIT IN DRY WELL.

GRAPHIC SCALE

0 1' 2' 4'

SCALE: 1/2" = 1'-0"

REVISIONS

| NO. | DATE | BY | DESCRIPTION |
|---|---|---|---|
| | | | |

DESIGN INFORMATION

| DESIGNED BY: | DRAWN BY: | CHECKED BY: | PROJECT MANAGER: |
|---|---|---|---|
| RK | KK | RK | AM |

PROFESSIONAL CERTIFICATION. I HEREBY CERTIFY THAT THESE DOCUMENTS WERE PREPARED OR APPROVED BY ME, AND THAT I AM A DULY LICENSED PROFESSIONAL ENGINEER UNDER THE LAWS OF THE STATE OF MARYLAND, LICENSE NO. 8050 EXPIRATION DATE: 08/19/2023

SEAL

STATE OF MARYLAND · TIMMEET SINGH GILL · REGISTERED NO. 36921 · PROFESSIONAL ENGINEER

WASHINGTON COUNTY DEPARTMENT OF ENGINEERING SERVICES
16232 ELLIOTT PARKWAY
WILLIAMSPORT, MD 21795
WASHINGTON COUNTY, MARYLAND

MAUGANSVILLE ROAD PUMP STATION
ELECTRICAL DEMOLITION PLAN


DHILLON ENGINEERING INC.
10902 Reisterstown Rd, Suite 204
Owings Mills, Maryland 21117
(410) 356-1095

EA Engineering, Science, and Technology, Inc., PBC
Hunt Valley Center
225 Schilling Circle, Suite 400
Hunt Valley, Maryland 21031
(410) 584-7000


DATE: APRIL 2022

PROJECT NUMBER: 1556701

**E-109**

SHEET: 67 OF 76

SP-21-025 / SWCP-21-020

FILE PATH: Z:\PROJECTS\EA\19 WASH COUNTY THREE PUMP STATIONS\04 DRAWINGS\BASE\1556701_TB 2020.DWG [MODEL] OF:ELIA MAZULI 5/17/2019 3:38 PM

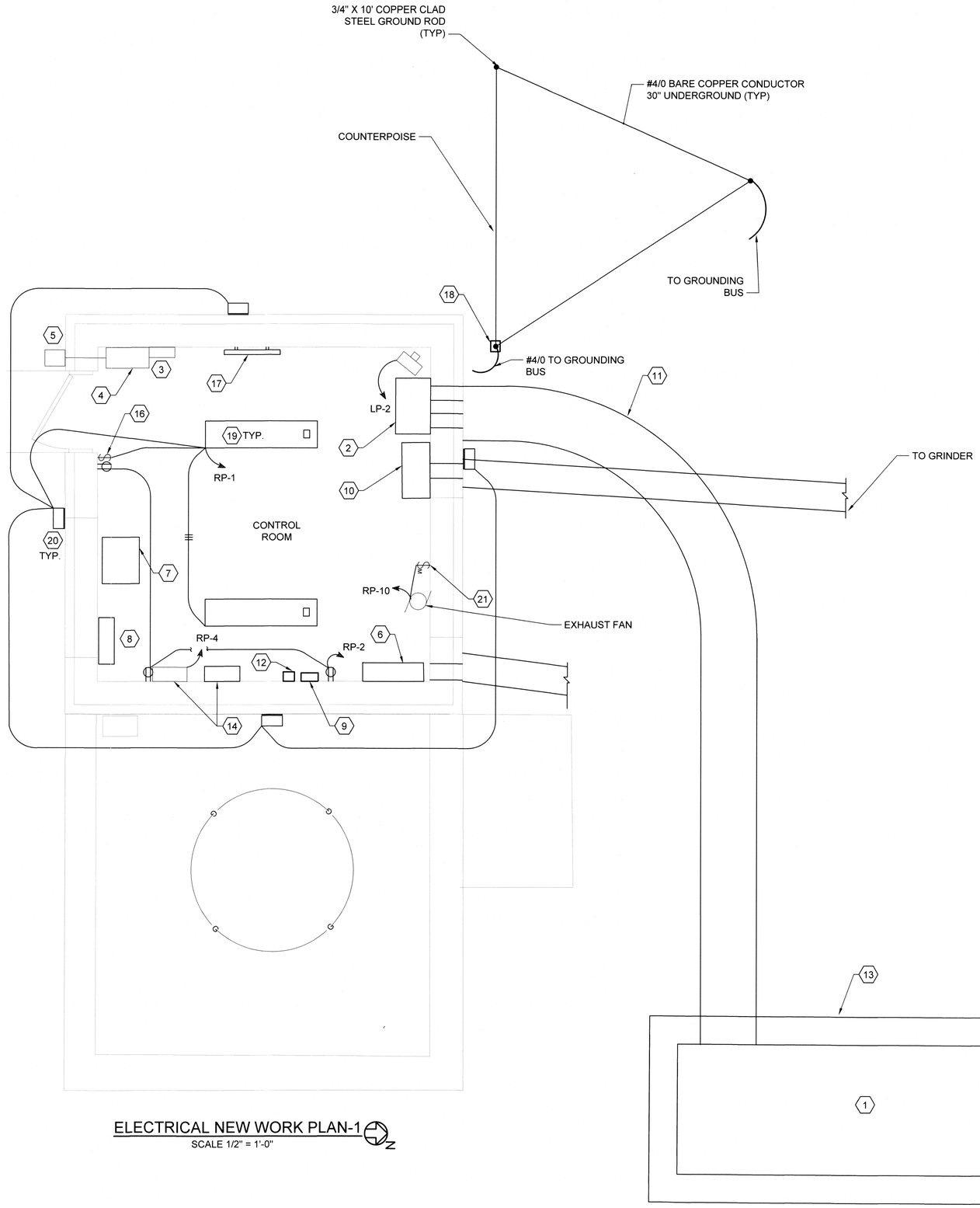


ELECTRICAL NEW WORK PLAN-1

SCALE 1/2" = 1'-0"

## GENERAL NOTES:

1. REFER TO DRAWING E-001 FOR ELECTRICAL GENERAL NOTES, LEGENDS, ABBREVIATIONS.
2. WET WELL IS CLASSIFIED CLASS 1 DIVISION 1 AREA. ALL WIRING INSIDE WET WELL SHALL BE SUITABLE FOR THIS CLASSIFICATION. PROVIDE EXPLOSION PROOF SEAL USING PVC COATED RGS CONDUIT.
3. REFER TO DRAWING E-608 FOR DUCTBANK AND TRENCHING DETAILS.

## SPECIFIC NOTES (X):

1. EMERGENCY GENERATOR 125KW, 480/277V, 3PH, 4W WITH SUB BASE TANK 24 HOURS RUN TIME ON FULL LOAD IN WEATHER PROOF SOUND ATTENUATED ENCLOSURE. PROVIDE MAINTENANCE PLATEFORM IF GENERATOR HEIGHT EXCEEDS 6 FEET.
2. 200A, 480V, 3P AUTOMATIC TRANSFER SWITCH IN NEMA-1 ENCLOSURE, 18" AFF.
3. EXISTING TYPE 1 SPD IN NEMA-1 ENCLOSURE.
4. EXISTING 200A, 480/277V, 3P CIRCUIT BREAKER IN NEMA-1 ENCLOSURE, SUITABLE FOR SERVICE DISCONNECT.
5. EXISTING 200A METER SOCKET AND METER FOR UTILITY COMPANY METER.
6. 400A, 480/277V, 3PH, 4W PANELBOARD 'LP' IN NEMA-1 ENCLOSURE, WITH BUILT SURGE PROTECTION DEVICE AND 200A, 3P MAIN CIRCUIT BREAKER.
7. WALL MOUNTED 15KVA, 480VΔ-120/208VY, 3PH VENTILATED DRY TYPE TRANSFORMER. WALL MOUNTING BRACKETS SHALL BE PROVIDED BY MANUFACTURER.
8. 100A, 120/208VY, 3PH, 4W PANELBOARD 'RP' IN NEMA-1 ENCLOSURE, WITH BUILT IN SPD AND 50A, 3P CIRCUIT BREAKER.
9. GENERATOR ANNUNCIATOR PANEL.
10. GRINDER CONTROL PANEL. POWER TO GRINDER SHALL BE THROUGH THIS CONTROL PANEL AND DISCONNECT SWITCH MOUNTED NEAR WETWELL.
11. 4 WAY DUCTBANK FOR EMERGENCY GENERATOR. REFER TO TRENCHING DETAIL 1 ON DRAWING E-608.
12. GENERATOR EMERGENCY SHUT OFF PUSH BUTTON.
13. CONCRETE PAD FOR GENERATOR. REFER TO STRUCTURAL DRAWING FOR DETAILS.
14. EXISTING SCADA AND TELEMETRY CONTROL PANELS TO BE REUSED. MAKE THE SYSTEM OPERATIONAL AS EXISTING.
15. NOT USED.
16. PROVIDE 120/277V, 1P NEW LIGHTING SWITCH.
17. 30"x2"x1/4" THICK COPPER GROUND BAR. REFER TO DETAIL 4, 5 & 6 ON DRAWING E-608 FOR MOUNTING.
18. GROUND TEST WELL. REFER DRAWING E-608 FOR DETAILS.
19. PROVIDE SURFACE MOUNTED LED 2' X 4' LIGHTING FIXTURE FROM COLUMBIA LIGHTING CATALOG NUMBER LXEM-4-35-ML-DCA-E-U-ELL14 WITH EMERGENCY BATTERY PACK OR APPROVED EQUAL.
20. PROVIDE WALL MOUNTED HUBBELL LED FIXTURE CATALOG NUMBER WGH-81L-4K-U-5 OR APPROVED EQUAL, 8' AFF SUITABLE FOR WET LOCATION WITH PHOTOCELL.
21. 120A, 1P, 1HP RATED MANUAL STARTER IN NEMA 1 ENCLOSURE, 4' AFF

GRAPHIC SCALE

0 1' 2' 4'

SCALE: 1/2" = 1'-0"

REVISIONS

| NO. | DATE | BY | DESCRIPTION |
|---|---|---|---|
| | | | |

DESIGN INFORMATION

| DESIGNED BY: | DRAWN BY: | CHECKED BY: | PROJECT MANAGER: |
|---|---|---|---|
| KK | KK | RK | AM |

PROFESSIONAL CERTIFICATION. I HEREBY CERTIFY THAT THESE DOCUMENTS WERE PREPARED OR APPROVED BY ME, AND THAT I AM A DULY LICENSED PROFESSIONAL ENGINEER UNDER THE LAWS OF THE STATE OF MARYLAND, LICENSE NO. 8050 EXPIRATION DATE: 08/19/2023

SEAL: STATE OF MARYLAND — KIRAN KUMAR KOTHAPALLI — REGISTERED NO. 40080 — PROFESSIONAL ENGINEER

WASHINGTON COUNTY DEPARTMENT OF ENGINEERING SERVICES
16232 ELLIOTT PARKWAY
WILLIAMSPORT, MD 21795
WASHINGTON COUNTY, MARYLAND

MAUGANSVILLE ROAD PUMP STATION
ELECTRICAL NEW WORK PLAN - CONTROL ROOM

DHILLON ENGINEERING INC.
10902 Reisterstown Rd, Suite 204
Owings Mills, Maryland 21117
(410) 356-1095

EA Engineering, Science, and Technology, Inc., PBC
Hunt Valley Center
225 Schilling Circle, Suite 400
Hunt Valley, Maryland 21031
(410) 584-7000

DATE: APRIL 2022

PROJECT NUMBER: 1556701

E-110

SHEET: 68 OF 76

SP-21-025 / SWCP-21-020

FILE PATH: Z:\PROJECTS\EA19 WASH COUNTY THREE PUMP STATIONS\04 DRAWINGS\BASE\1156701_TB 2020.DWG [MODEL] OFELIA MAZILU 5/17/2019 3:38 PM

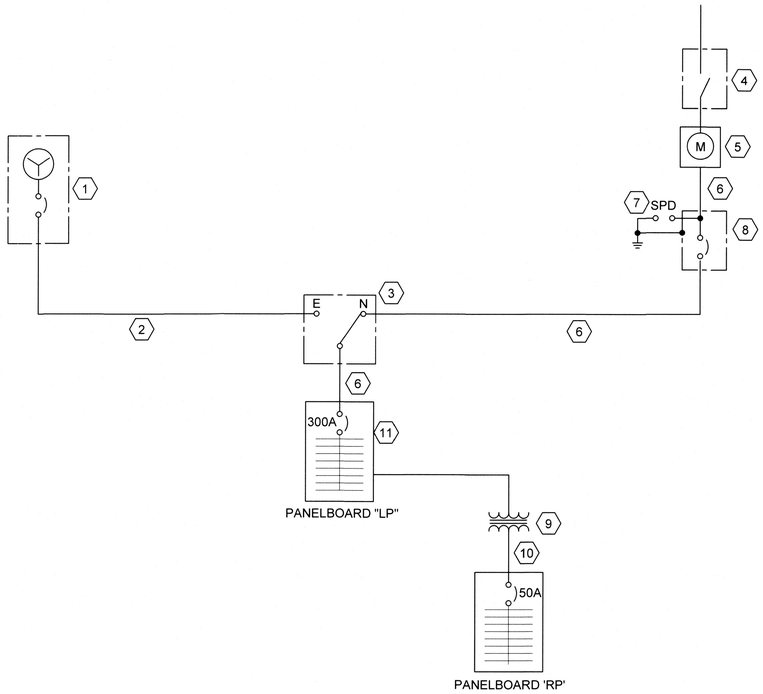


1 E-601 **ONE LINE DIAGRAM**
NOT TO SCALE

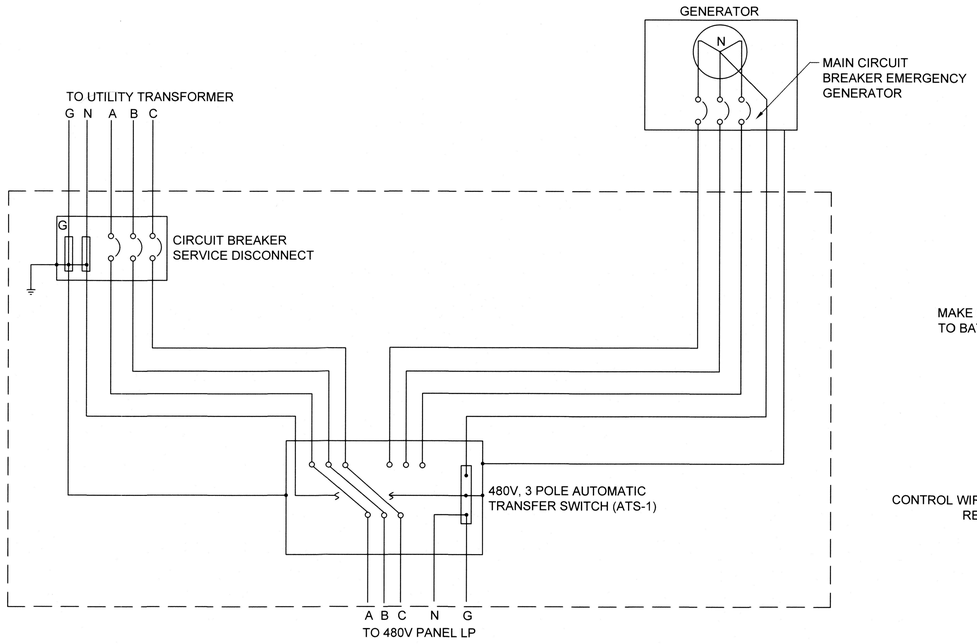


2 E-601 **EMERGENCY GENERATOR, ATS AND MAIN CIRCUIT BREAKER GROUNDING CONNECTION DETAIL**
NOT TO SCALE

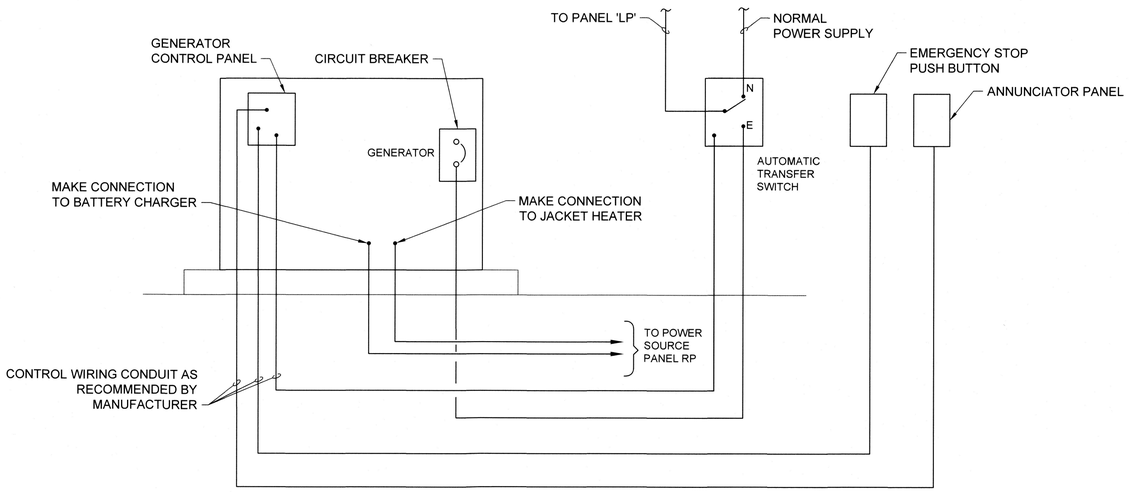


3 E-601 **EMERGENCY GENERATOR WIRING CONNECTION**
NOT TO SCALE

## GENERAL NOTES:

1. REFER TO DRAWING E-608 FOR DUCTBANK AND TRENCHING DETAILS.

## SPECIFIC NOTES (X):

1. 180 kW DIESEL GENERATOR, 480/277V, 3PH, 4W IN WEATHER PROOF SOUND ATTENUATED ENCLOSURE. GENERATOR SHALL HAVE SUB BASE TANK FOR 24 HOUR RUN TIME AT FULL LOAD.
2. 4#350KCMIL & #2G IN 4" PVC SCH 40 DUCT, 30" UNDERGROUND DIRECT BURIED. REFER TO TRENCHING DETAIL 2 ON DRAWING E-608.
3. 300A, 480V, 3P AUTOMATIC TRANSFER SWITCH IN NEMA-1 ENCLOSURE, WALL MOUNT WITH BUILT-IN SPD.
4. 400A, 480V, 3P NON FUSED DISCONNECT PER UTILITY COMPANY REQUIREMENTS. DISCONNECT SHALL BE LOCKABLE IN OPEN AND CLOSE POSITION AND SHALL HAVE PROVISION FOR COMPANY SEAL AND/OR PADLOCK.
5. PROVIDE 300A METER SOCKET PER UTILITY COMPANY REQUIREMENTS. METER TO BE PROVIDED AND INSTALLED BY UTILITY COMPANY.
6. 4#350KCMIL & #2G IN 3"C.
7. TYPE 1 SPD WITH INTEGRAL DISCONNECT IN NEMA-1 ENCLOSURE. GROUND SPD AS PER MANUFACTURER'S REQUIREMENTS.
8. 300A, 480V, 3P CIRCUIT BREAKER IN NEMA-1 ENCLOSURE, SUITABLE FOR SERVICE DISCONNECT.
9. WALL MOUNTED 15kVA, 480VΔ-208VY/120V, 3P, 4W DRY TYPE TRANSFORMER.
10. 4#6 & #8G IN 1 1/4"C.
11. 400A, 480/277V, 3Ø, 4W PANELBOARD LP IN NEMA 1 ENCLOSURE WITH 300A, 3P MAIN CIRCUIT BREAKER AND IN BUILT SURGE PROTECTION DEVICE

REVISIONS

| NO. | DATE | BY | DESCRIPTION |
|---|---|---|---|

DESIGN INFORMATION

| DESIGNED BY: | DRAWN BY: | CHECKED BY: | PROJECT MANAGER: |
|---|---|---|---|
| KK | KK | RK | AM |

PROFESSIONAL CERTIFICATION. I HEREBY CERTIFY THAT THESE DOCUMENTS WERE PREPARED OR APPROVED BY ME, AND THAT I AM A DULY LICENSED PROFESSIONAL ENGINEER UNDER THE LAWS OF THE STATE OF MARYLAND, LICENSE NO. 8050 EXPIRATION DATE: 08/19/2023

SEAL

STATE OF MARYLAND · ROBERT S. KOLODZIEJ · REGISTERED · NO. 8050 · PROFESSIONAL ENGINEER

WASHINGTON COUNTY DEPARTMENT OF ENGINEERING SERVICES
16232 ELLIOTT PARKWAY
WILLIAMSPORT, MD 21795
WASHINGTON COUNTY, MARYLAND

FARM LANE PUMP STATION
ELECTRICAL ONE LINE DIAGRAM AND DETAILS

DHILLON ENGINEERING INC.
10902 Reisterstown Rd, Suite 204
Owings Mills, Maryland 21117
(410) 356-1095

EA Engineering, Science, and Technology, Inc., PBC
Hunt Valley Center
225 Schilling Circle, Suite 400
Hunt Valley, Maryland 21031
(410) 584-7000

DATE: APRIL 2022

PROJECT NUMBER: 1556701

E-601
SHEET: 69 OF 76

SP-21-025 / SWCP-21-020

FILE PATH: Z:\PROJECTS\EA\19 WASH COUNTY THREE PUMP STATIONS\04 DRAWINGS\BASE\1556701_TR 2020.DWG [MODEL] | OFELIA MAZULI 5/17/2019 3:38 PM

## PANEL SCHEDULE

PANELBOARD: 'LP' | BUS RATING 400A | PHASE 3 | MAIN OC DEVICE 300A, 480V, 3P
MIN. AIC 42KAIC | VOLTS 480/277V | WIRE 4 +1G
ENCL. NEMA 1 | MOUNTING SURFACE | BRANCH CKT. DEVICE BOLT ON
LOCATION CONTROL ROOM | NOTES SOLID NEUTRAL AND GROUND BUS

| CKT NO | DESCRIPTION | LOAD (VA) | COND. | WIRE GND | WIRE POWER | C.B. FR | C.B. TP | C.B. P | A | B | C | C.B. P | C.B. TP | C.B. FR | WIRE POWER | WIRE GND | COND. | LOAD (VA) | DESCRIPTION | CKT NO |
|---|---|---|---|---|---|---|---|---|---|---|---|---|---|---|---|---|---|---|---|---|
| 1 | SEWAGE PUMP VIA CONTROL PANEL (50HP+50HP) | 36,066 | 2 1/2" | #4 | 4#4/0 | 225 | 200 | 3 | ● | | | 3 | 15 | 100 | 3#10 | #10 | 3/4" | 893 | AERATOR BLOWER (1.5 HP) | 2 |
| 3 | | 36,066 | - | - | - | - | - | - | | ● | | - | - | - | - | - | - | 893 | - | 4 |
| 5 | | 36,066 | - | - | - | - | - | - | | | ● | - | - | - | - | - | - | 893 | - | 6 |
| 7 | SPARE | - | - | - | - | 100 | 70 | 3 | ● | | | 3 | 15 | 100 | 3#10 | #10 | 3/4" | 1,330 | COMMUNITOR/GRINDER MANHOLE 5HP | 8 |
| 9 | - | - | - | - | - | - | - | - | | ● | | - | - | - | - | - | - | 1,330 | - | 10 |
| 11 | - | - | - | - | - | - | - | - | | | ● | - | - | - | - | - | - | 1,330 | - | 12 |
| 13 | SPARE | - | - | - | - | 100 | 15 | 3 | ● | | | 3 | 25 | 100 | 3#10 | #10 | 3/4" | 3000 | 15kVA STEP DOWN TRANSFORMER | 14 |
| 15 | - | - | - | - | - | - | - | - | | ● | | - | - | - | - | - | - | 3000 | - | 16 |
| 17 | - | - | - | - | - | - | - | - | | | ● | - | - | - | - | - | - | 3000 | - | 18 |
| 19 | UNIT HEATER CONTROL ROOM | 1666 | 3/4" | #12 | 3 #12 | 100 | 15 | 3 | ● | | | 3 | 20 | 100 | - | - | - | - | SPARE | 20 |
| 21 | - | 1666 | - | - | - | - | - | - | | ● | | - | - | - | - | - | - | - | - | 22 |
| 23 | - | 1666 | - | - | - | - | - | - | | | ● | - | - | - | - | - | - | - | - | 24 |
| 25 | SPACE | - | - | - | - | - | - | - | ● | | | 3 | 30 | 100 | 3#10 | #10 | 3/4" | - | SPD | 26 |
| 27 | - | - | - | - | - | - | - | - | | ● | | - | - | - | - | - | - | - | - | 28 |
| 29 | - | - | - | - | - | - | - | - | | | ● | - | - | - | - | - | - | - | - | 30 |

CONNECTED LOAD PHASE A= 42955
B= 42955
C= 42955
TOTAL CONNECTED VA: 128865
TOTAL CONNECTED AMPS: 155

REMARKS: COPPER BUSING

## PANEL SCHEDULE

PANELBOARD: 'RP' | BUS RATING 100A | PHASE 3 | MAIN OC DEVICE 50A, 208V, 3P
MIN. AIC 10KAIC | VOLTS 208/120V | WIRE 4
ENCL. NEMA 1 | MOUNTING SURFACE | BRANCH CKT. DEVICE BOLT ON
LOCATION CONTROL ROOM | NOTES SOLID NEUTRAL AND GROUND BUS

| CKT NO | DESCRIPTION | LOAD (VA) | COND. | WIRE GND | WIRE POWER | C.B. FR | C.B. TP | C.B. P | A | B | C | C.B. P | C.B. TP | C.B. FR | WIRE POWER | WIRE GND | COND. | LOAD (VA) | DESCRIPTION | CKT NO |
|---|---|---|---|---|---|---|---|---|---|---|---|---|---|---|---|---|---|---|---|---|
| 1 | LIGHTING | 328 | 3/4" | #12 | 2#12 | 100 | 20 | 1 | ● | | | 1 | 20 | 100 | 2#12 | #12 | 3/4" | 900 | RECEPTACLE | 2 |
| 3 | SPARE | - | - | - | - | 100 | 20 | 1 | | ● | | 1 | 20 | 100 | 2#12 | #12 | 3/4" | 600 | ALARM TELEMETERING | 4 |
| 5 | GENERATOR BLOCK HEATER | 750 | 3/4" | #12 | 2#12 | 100 | 15 | 2 | | | ● | 1 | 15 | 100 | 2#12 | #12 | 3/4" | 100 | FLOWMETER | 6 |
| 7 | - | 750 | - | - | - | - | - | - | ● | | | 1 | 15 | 100 | - | - | - | - | SPARE | 8 |
| 9 | BATTERY CHARGER | 100 | 3/4" | #12 | 2#12 | 100 | 20 | 1 | | ● | | 1 | 20 | 100 | - | - | - | - | SPARE | 10 |
| 11 | SPARE | - | - | - | - | 100 | 20 | 1 | | | ● | 1 | 20 | 100 | - | - | - | - | SPARE | 12 |
| 13 | SPARE | - | - | - | - | 100 | 20 | 1 | ● | | | 1 | 15 | 100 | - | - | - | - | SPARE | 14 |
| 15 | CU-1/FC-1 | 2080 | 3/4 | #10 | 2#10 | 100 | 30 | 2 | | ● | | 1 | 15 | 100 | - | - | - | - | SPARE | 16 |
| 17 | - | 2080 | - | - | - | - | - | - | | | ● | 1 | 20 | 100 | - | - | - | - | SPARE | 18 |
| 19 | - | - | - | - | - | - | - | - | ● | | | - | - | - | - | - | - | - | - | 20 |
| 21 | - | - | - | - | - | - | - | - | | ● | | - | - | - | - | - | - | - | - | 22 |
| 23 | - | - | - | - | - | - | - | - | | | ● | - | - | - | - | - | - | - | - | 24 |
| 25 | - | - | - | - | - | - | - | - | ● | | | - | - | - | - | - | - | - | - | 26 |
| 27 | - | - | - | - | - | - | - | - | | ● | | - | - | - | - | - | - | - | - | 28 |
| 29 | - | - | - | - | - | - | - | - | | | ● | - | - | - | - | - | - | - | - | 30 |

CONNECTED LOAD PHASE A= 1978
B= 2780
C= 2830
TOTAL CONNECTED VA: 7588
TOTAL CONNECTED AMPS: 22

REMARKS: COPPER BUSING

REVISIONS

| NO. | DATE | BY | DESCRIPTION |
|---|---|---|---|

DESIGN INFORMATION
DESIGNED BY: KK
DRAWN BY: KK
CHECKED BY: RK
PROJECT MANAGER: AM

PROFESSIONAL CERTIFICATION. I HEREBY CERTIFY THAT THESE DOCUMENTS WERE PREPARED OR APPROVED BY ME, AND THAT I AM A DULY LICENSED PROFESSIONAL ENGINEER UNDER THE LAWS OF THE STATE OF MARYLAND, LICENSE NO. 8050 EXPIRATION DATE: 08/19/2023

SEAL

STATE OF MARYLAND · GUIMEET S. CHOPRA · No. 18... · PROFESSIONAL ENGINEER

WASHINGTON COUNTY DEPARTMENT OF ENGINEERING SERVICES
16232 ELLIOTT PARKWAY
WILLIAMSPORT, MD 21795
WASHINGTON COUNTY, MARYLAND

FARM LANE PUMP STATION
ELECTRICAL SCHEDULES

DEI
DHILLON ENGINEERING INC.
10902 Reisterstown Rd, Suite 204
Owings Mills, Maryland 21117
(410) 356-1095

EA®
EA Engineering, Science, and Technology, Inc., PBC
Hunt Valley Center
225 Schilling Circle, Suite 400
Hunt Valley, Maryland 21031
(410) 584-7000

DATE: APRIL 2022
PROJECT NUMBER: 1556701

E-602
SHEET: 70 OF 76

SP-21-025 / SWCP-21-020

FILE PATH: Z:\PROJECTS\EA\13 WASH COUNTY THREE PUMP STATIONS\04 DRAWINGS\BASIS\1556701_TB 2020.DWG [MODEL] OFELIA MAZALI 5/17/2019 3:39 PM

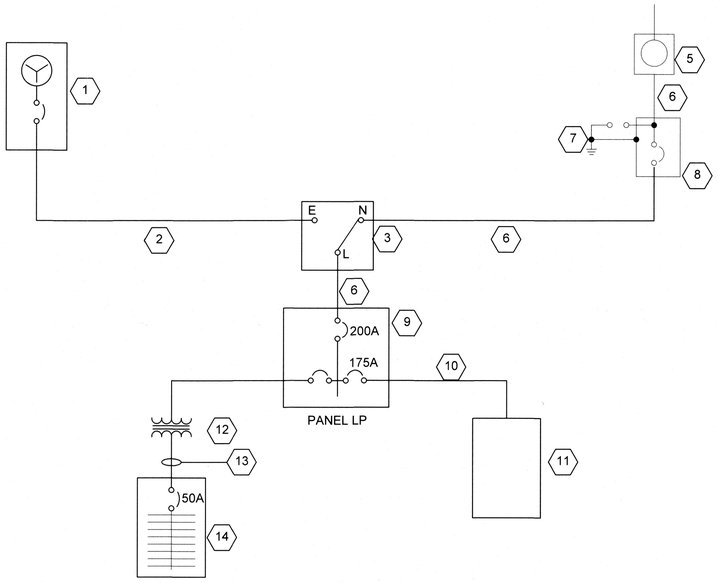


**ONE LINE DIAGRAM**
NOT TO SCALE

## GENERAL NOTES:

1. REFER TO DRAWING E-608 FOR DUCTBANK AND TRENCHING DETAILS.
2. PROVIDE CONDUITS INSIDE THE ENCLOSURE PER ONE LINE DIAGRAM

## SPECIFIC NOTES (X):

1. 125 kW DIESEL GENERATOR, 480/277V, 3PH, 4W IN WEATHER PROOF SOUND ATTENUATED ENCLOSURE. GENERATOR SHALL HAVE SUB BASE TANK FOR 24 HOUR RUN TIME AT FULL LOAD.
2. 4 #4/0 & #6G IN 4" PVC SCH 40 DUCT, 30" UNDERGROUND DIRECT BURIED.
3. 200A, 480V, 3P AUTOMATIC TRANSFER SWITCH IN NEMA-1 ENCLOSURE WITH BUILT-IN SPD.
4. NOT USED
5. EXISTING UTILITY COMPANY METER.
6. 4 #4/0 & #2G IN 3"C.
7. EXISTING TYPE 1 SPD WITH INTEGRAL DISCONNECT IN NEMA-1 ENCLOSURE. GROUND SPD AS PER MANUFACTURER'S REQUIREMENTS.
8. EXISTING 200A, 480V, 3P CIRCUIT BREAKER IN NEMA-1 ENCLOSURE, SUITABLE FOR SERVICE DISCONNECT.
9. 400A, 480/277V, 3Ø, 4W PANELBOARD 'LP' IN NEMA 1 ENCLOSURE WITH 200A 480V MAIN CIRCUIT BREAKER.
10. 4 #2/0 & #6G IN 3" UNDERGROUND SCHEDULE 40 DUCT.
11. PUMP CONTROL PANEL PROVIDED WITH PUMP PACKAGE SYSTEM. REFER DRAWING E-102 FOR LOCATION
12. WALL MOUNTED 15KVA, 480V-120/208V THREE PHASE TRANSFORMER. MOUNT WITH MANUFACTURER PROVIDED WALL BRACKETS.
13. 4#6 & #8G IN 1 1/4" C.
14. 100A, 120/208V 3Ø, 4W PANELBOARD RP IN NEMA 1 ENCLOSURE

REVISIONS

| NO. | DATE | BY | DESCRIPTION |
|---|---|---|---|
| | | | |

DESIGN INFORMATION

| DESIGNED BY: | DRAWN BY: | CHECKED BY: | PROJECT MANAGER: |
|---|---|---|---|
| KK | KK | RK | AM |

SEAL

PROFESSIONAL CERTIFICATION. I HEREBY CERTIFY THAT THESE DOCUMENTS WERE PREPARED OR APPROVED BY ME, AND THAT I AM A DULY LICENSED PROFESSIONAL ENGINEER UNDER THE LAWS OF THE STATE OF MARYLAND, LICENSE NO. 8050 EXPIRATION DATE: 08/19/2023

STATE OF MARYLAND · GURMEET S. DHILLON · REGISTERED · NO. 8050 · PROFESSIONAL ENGINEER

WASHINGTON COUNTY DEPARTMENT OF ENGINEERING SERVICES
16232 ELLIOTT PARKWAY
WILLIAMSPORT, MD 21795
WASHINGTON COUNTY, MARYLAND

MAUGANSVILLE ROAD PUMP STATION
ELECTRICAL ONE LINE DIAGRAM


DHILLON ENGINEERING INC.
10902 Reisterstown Rd, Suite 204
Owings Mills, Maryland 21117
(410) 356-1095

EA Engineering, Science, and Technology, Inc., PBC
Hunt Valley Center
225 Schilling Circle, Suite 400
Hunt Valley, Maryland 21031
(410) 584-7000


DATE: APRIL 2022

PROJECT NUMBER: 1556701

**E-603**



SP-21-025 / SWCP-21-020

FILE PATH: Z:\PROJECTS\EA\15 WASH COUNTY THREE PUMP STATIONS\04 DRAWINGS\BASE\1556701_TB 2020.DWG [MODEL] OFFLUA MAZALU 5/17/2019 3:38 PM

## PANEL SCHEDULE

| | | | | | | | | | | | | | | | | | | | |
|---|---|---|---|---|---|---|---|---|---|---|---|---|---|---|---|---|---|---|---|
| PANELBOARD: | 'LP' | | BUS RATING | 400A | | | | | | | MAIN OC DEVICE | 200A, 480V, 3P | | | | | | | |
| MIN. AIC | 42KAIC | | VOLTS | 480/277V | | | PHASE | 3 | | | WIRE | 4 +1G | | | | | | | |
| ENCL. NEMA | 1 | | MOUNTING | SURFACE | | | | | | | BRANCH CKT. DEVICE | BOLT ON | | | | | | | |
| LOCATION | NEMA 3RX ENCLOSURE | | NOTES | SOLID NEUTRAL AND GROUND BUS | | | | | | | | | | | | | | | |

| CKT NO | DESCRIPTION | LOAD (VA) | COND. | WIRE GND | WIRE POWER | C.B. FR | C.B. TP | C.B. P | A B C | C.B. P | C.B. TP | C.B. FR | WIRE POWER | WIRE GND | COND. | LOAD (VA) | DESCRIPTION | CKT NO |
|---|---|---|---|---|---|---|---|---|---|---|---|---|---|---|---|---|---|---|
| 1 | PUMP CONTROL PANEL | 34,428 | 3" | #6 | 4#2/0 | 225 | 175 | 3 | | 3 | 15 | 100 | 3#12 | #12 | 3/4" | 1,667 | UNIT HEATER | 2 |
| 3 | (40HP+40HP+7.5KW HEATER+ 5KVA CONTROL TRANSFORMER) | 34,428 | - | - | - | - | - | - | | - | - | - | - | - | - | 1,667 | - | 4 |
| 5 | | 34,428 | - | - | - | - | - | - | | - | - | - | - | - | - | 1,667 | - | 6 |
| 7 | SPARE | - | - | - | - | 100 | 15 | 3 | | 3 | 15 | 100 | 3#10 | #10 | 1" | 2,100 | GRINDER IN WETWELL (5HP) THRU GRINDER CONTROL PANEL | 8 |
| 9 | - | - | - | - | - | - | - | - | | - | - | - | - | - | - | 2,100 | | 10 |
| 11 | - | - | - | - | - | - | - | - | | - | - | - | - | - | - | 2,100 | - | 12 |
| 13 | AERATOR BLOWER (1.5 HP) | 893 | 3/4" | #10 | 3#10 | 100 | 15 | 3 | | 2 | 25 | 100 | 3#10 | #10 | 3/4" | 1798 | 15kVA TRANSFORMER | 14 |
| 15 | - | 893 | - | - | - | - | - | - | | - | - | - | - | - | - | 1880 | - | 16 |
| 17 | - | 893 | - | - | - | - | - | - | | - | - | - | - | - | - | 1850 | - | 18 |
| 19 | SPACE | - | - | - | - | - | - | - | | - | - | - | - | - | - | - | SPACE | 20 |
| 21 | - | - | - | - | - | - | - | - | | - | - | - | - | - | - | - | - | 22 |
| 23 | - | - | - | - | - | - | - | - | | - | - | - | - | - | - | - | - | 24 |
| 25 | SPACE | - | - | - | - | - | - | - | | - | - | - | - | - | - | - | SPACE | 26 |
| 27 | - | - | - | - | - | - | - | - | | - | - | - | - | - | - | - | - | 28 |
| 29 | - | - | - | - | - | - | - | - | | - | - | - | - | - | - | - | - | 30 |

CONNECTED LOAD PHASE A= 40886
B= 40968
C= 40938

TOTAL CONNECTED VA: 122792
TOTAL CONNECTED AMPS: 148

REMARKS: COPPER BUSING

## PANEL SCHEDULE

| | | | | | | | | | | | | | | | | | | | |
|---|---|---|---|---|---|---|---|---|---|---|---|---|---|---|---|---|---|---|---|
| PANELBOARD: | 'RP' | | BUS RATING | 100A | | | PHASE | 3 | | | MAIN OC DEVICE | 50A, 208V, 3P | | | | | | | |
| MIN. AIC | 10KAIC | | VOLTS | 208/120V | | | | | | | WIRE | 4 | | | | | | | |
| ENCL. NEMA | 1 | | MOUNTING | SURFACE | | | | | | | BRANCH CKT. DEVICE | BOLT ON | | | | | | | |
| LOCATION | CONTROL ROOM | | NOTES | SOLID NEUTRAL AND GROUND BUS | | | | | | | | | | | | | | | |

| CKT NO | DESCRIPTION | LOAD (VA) | COND. | WIRE GND | WIRE POWER | C.B. FR | C.B. TP | C.B. P | A B C | C.B. P | C.B. TP | C.B. FR | WIRE POWER | WIRE GND | COND. | LOAD (VA) | DESCRIPTION | CKT NO |
|---|---|---|---|---|---|---|---|---|---|---|---|---|---|---|---|---|---|---|
| 1 | LIGHTING | 328 | EXIST | EXIST | EXIST | 100 | 20 | 1 | | 1 | 20 | 100 | 2#12 | #12 | 3/4" | 720 | RECEPTACLE | 2 |
| 3 | SPARE | - | - | - | - | 100 | 20 | 1 | | 1 | 20 | 100 | 2#12 | #12 | 3/4" | 600 | ALARM TELEMETERING | 4 |
| 5 | GENERATOR BLOCK HEATER | 750 | 3/4" | #12 | 2#12 | 100 | 15 | 2 | | 1 | 20 | 100 | 2#12 | #12 | 3/4" | 100 | FLOW METER | 6 |
| 7 | - | 750 | - | - | - | - | - | - | | 1 | 15 | 100 | - | - | - | - | SPARE | 8 |
| 9 | BATTERY CHARGER | 1000 | 3/4" | #12 | 2#12 | 100 | 20 | 1 | | 1 | 20 | 100 | 2#12 | #12 | 3/4" | 1180 | EXHAUST FAN | 10 |
| 11 | SPARE | - | - | - | - | 100 | 20 | 1 | | 1 | 20 | 100 | - | - | - | - | SPARE | 12 |
| 13 | SPARE | - | - | - | - | 100 | 20 | 1 | | 1 | 15 | 100 | - | - | - | - | SPARE | 14 |
| 15 | SPARE | - | - | - | - | 100 | 30 | 2 | | 1 | 15 | 100 | - | - | - | - | SPARE | 16 |
| 17 | - | - | - | - | - | - | - | - | | 1 | 20 | 100 | - | - | - | - | SPARE | 18 |
| 19 | - | - | - | - | - | - | - | - | | - | - | - | - | - | - | - | - | 20 |
| 21 | - | - | - | - | - | - | - | - | | - | - | - | - | - | - | - | - | 22 |
| 23 | - | - | - | - | - | - | - | - | | - | - | - | - | - | - | - | - | 24 |
| 25 | - | - | - | - | - | - | - | - | | - | - | - | - | - | - | - | - | 26 |
| 27 | - | - | - | - | - | - | - | - | | - | - | - | - | - | - | - | - | 28 |
| 29 | - | - | - | - | - | - | - | - | | - | - | - | - | - | - | - | - | 30 |

CONNECTED LOAD PHASE A= 1798
B= 1880
C= 1850

TOTAL CONNECTED VA: 5528
TOTAL CONNECTED AMPS: 16

REMARKS: COPPER BUSING

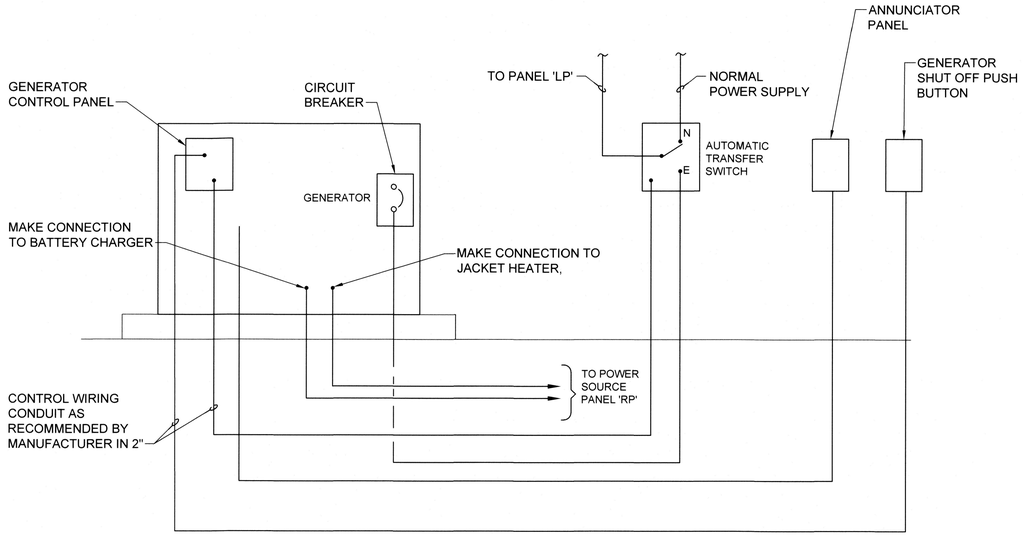


**EMERGENCY GENERATOR WIRING CONNECTION**
NOT TO SCALE

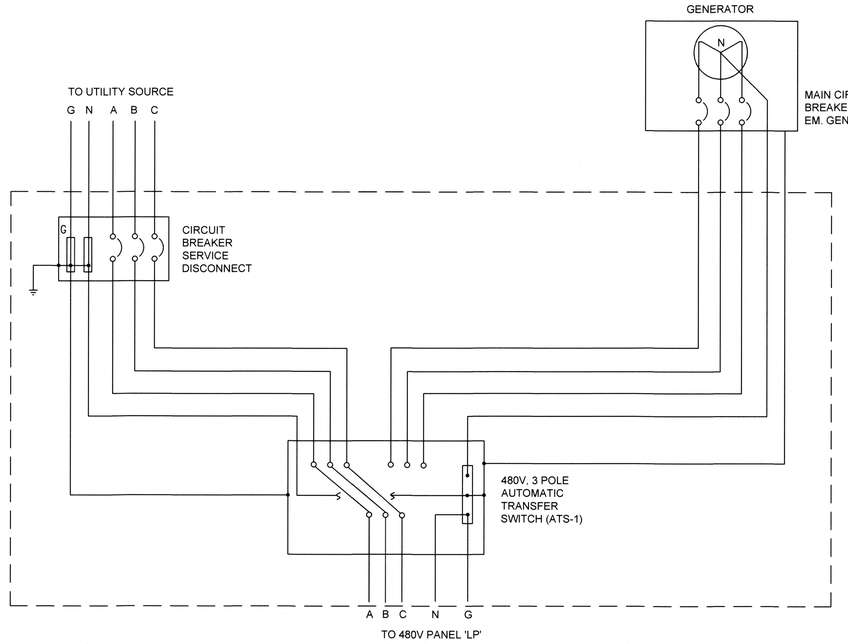


**EMERGENCY GENERATOR, ATS AND MAIN CIRCUIT BREAKER GROUNDING CONNECTION DETAIL**
NOT TO SCALE

REVISIONS

| NO. | DATE | BY | DESCRIPTION |
|---|---|---|---|
| | | | |

DESIGN INFORMATION

| DESIGNED BY: | DRAWN BY: | CHECKED BY: | PROJECT MANAGER: |
|---|---|---|---|
| KK | KK | RK | AM |

PROFESSIONAL CERTIFICATION. I HEREBY CERTIFY THAT THESE DOCUMENTS WERE PREPARED OR APPROVED BY ME, AND THAT I AM A DULY LICENSED PROFESSIONAL ENGINEER UNDER THE LAWS OF THE STATE OF MARYLAND, LICENSE NO. 8050 EXPIRATION DATE: 08/19/2023

SEAL: STATE OF MARYLAND · KURTIS D. KNOX · REGISTERED - NO. 8050 · PROFESSIONAL ENGINEER · 5/27/22

WASHINGTON COUNTY DEPARTMENT OF ENGINEERING SERVICES
16232 ELLIOTT PARKWAY
WILLIAMSPORT, MD 21795
WASHINGTON COUNTY, MARYLAND

MAUGANSVILLE PUMP STATION
ELECTRICAL SCHEDULES AND DETAILS


EA Engineering, Science, and Technology, Inc., PBC
Hunt Valley Center
225 Schilling Circle, Suite 400
Hunt Valley, Maryland 21031
(410) 584-7000


DATE: APRIL 2022

PROJECT NUMBER: 1556701

**E-604**

SHEET: 72 OF 76

SP-21-025 / SWCP-21-020


DHILLON ENGINEERING INC.
10902 Reisterstown Rd, Suite 204
Owings Mills, Maryland 21117
(410) 356-1095



FILE PATH: Z:\PROJECTS\EA\19 WASH COUNTY THREE PUMP STATIONS\04 DRAWINGS\BASE\1556701_TB 2020 DWG MODEL\ OFFELIA MAZALU 5/17/2019 3:38 PM

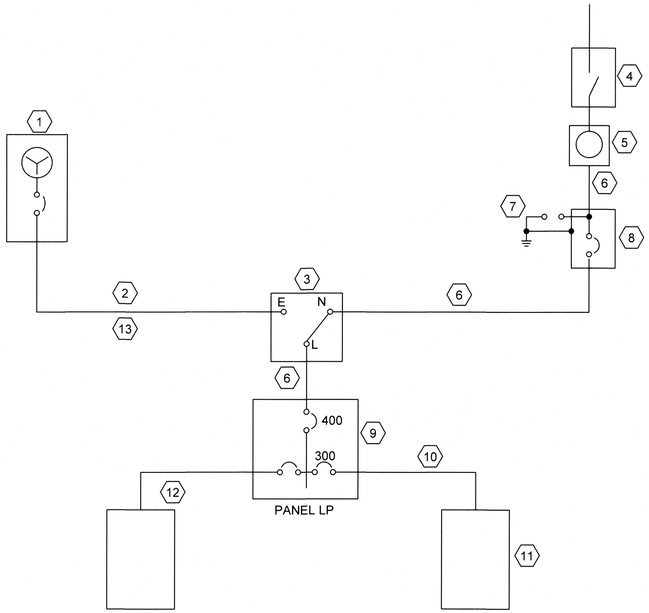


**ONE LINE DIAGRAM**
NO TO SCALE

## SPECIFIC NOTES (X):

1. 230 KW DIESEL GENERATOR, 480/277V, 3PH, 4W IN WEATHER PROOF SOUND ATTENUATED ENCLOSURE. GENERATOR SHALL HAVE A 350A, 480V, 3P MOLDED CASE MAIN CIRCUIT BREAKER AND SUB BASE TANK FOR 24 HOUR RUN TIME AT FULL LOAD. PROVIDE SERVICE PLATEFORM IF HEIGHT OF GENERATOR EXCEEDS 6 FEET.
2. 4 #600KCMIL & #1/0G IN 4" PVC SCH 40 DUCT, 30" UNDERGROUND DIRECT BURIED. REFER DETAIL 1 ON DRAWING E-608 FOR TRENCHING DETAILS.
3. 400A, 480V, 3P AUTOMATIC TRANSFER SWITCH IN NEMA 1 ENCLOSURE WITH BUILT-IN SPD.
4. 400A, 480V, 3P NON FUSED DISCONNECT IN NEMA 4X ENCLOSURE PER UTILITY COMPANY REQUIREMENTS. DISCONNECT SHALL BE LOCKABLE IN OPEN AND CLOSE POSITION AND SHALL HAVE PROVISION FOR COMPANY SEAL AND/OR PADLOCK.
5. PROVIDE AND INSTALL 400A METER SOCKET PER UTILITY COMPANY REQUIREMENTS. METER TO BE PROVIDED AND INSTALLED BY UTILITY COMPANY.
6. 4 # 600KCMIL & #1/0G IN 4"C.
7. TYPE 1 SPD WITH INTEGRAL DISCONNECT IN NEMA-4X SS316 ENCLOSURE. GROUND SPD AS PER MANUFACTURER'S REQUIREMENTS.
8. 400A, 480V, 3P CIRCUIT BREAKER IN NEMA-1 ENCLOSURE, SUITABLE FOR SERVICE DISCONNECT.
9. 600A, 480/277V, 3Ø, 4W PANELBOARD IN NEMA 1 ENCLOSURE MOUNTED IN NEMA 3RX 316 SS ENCLOSURE WITH 400A MAIN CIRCUIT BREAKER
10. 4 # 350KCMIL & #4G IN 4" UNDERGROUND DUCT.
11. PUMP CONTROL PANEL PROVIDED WITH PACKAGE PUMP SYSTEM. REFER DRAWING E-103 FOR LOCATION.
12. 5KVA, 480V-120/240V SINGLE PHASE MINI POWER ZONE. PRIMARY AND SECONDARY PROTECTION SHALL BE PER MANUFACTURER RECOMMENDATION WITH 2 - 2P, 20A AND 6 - 20A, 1P BRANCH CIRCUIT BREAKERS
13. 2-4" (ONE FOR POWER PER NOTE 2 & 1 SPARE), 2-2" CONDUITS FOR CONTROL WIRING, GENERATOR BATTERY CHARGER & HEATER TO GENERATOR
14. 2-2" CONDUIT TO GENERATOR FOR GENERATOR JACKET HEATER AND BATTERY CHARGER.
15. 1-1" TO GRINDER THROUGH GRINDER CONTROL PANEL.
16. THERMOSTATICALLY CONTROLLED 500W HEATER
17. GENERATOR ANNUNCIATOR PANEL
18. #4/0 BARE COPPER GROUNDING CONDUCTOR 30" UNDERGROUND
19. SINGLE WAY SWITCH FOR OUTDOOR POLE MOUNTED LIGHTS AND 3 WAY SWITCH FOR ENCLOSURE LIGHTS.
20. PROVIDE ENCLOSURE CEILING MOUNTED 4' LONG LED ENCLOSED AND GASKETED FIBERGLASS FROM COLUMBIA LIGHTING CATALOG NUMBER LXEM-4-35-LW-RA-E-U OR APPROVED EQUAL.
21. GENERATOR EMERGENCY SHUT OFF PUSH BUTTON.

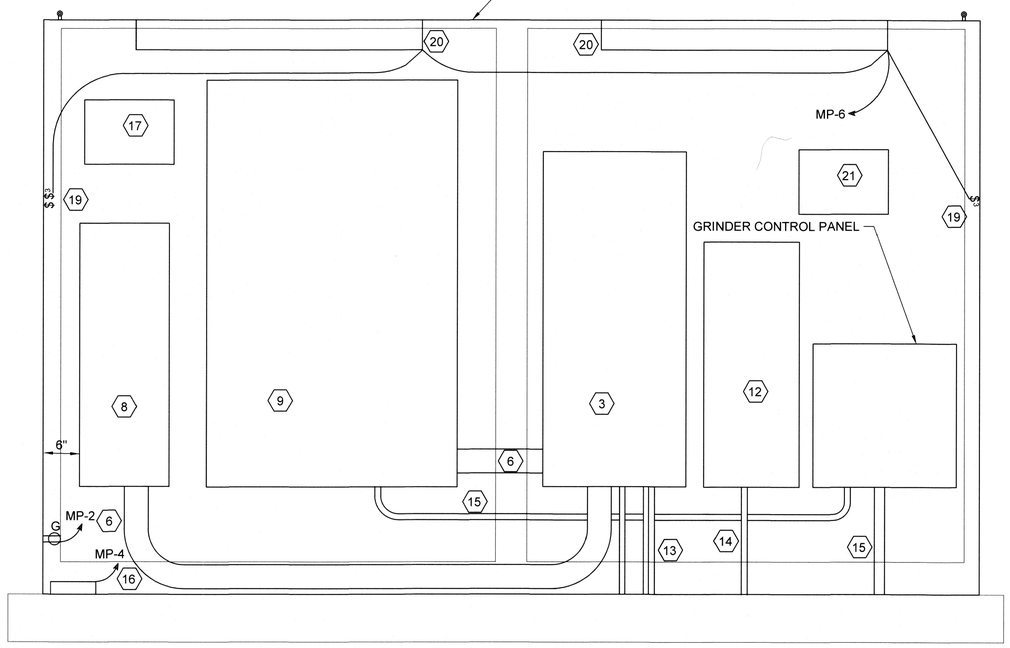


**EQUIPMENT MOUNTING DETAILS IN NEMA 3RX ENCLOSURE - ELEVATION**
SCALE 1' = 1'-0"

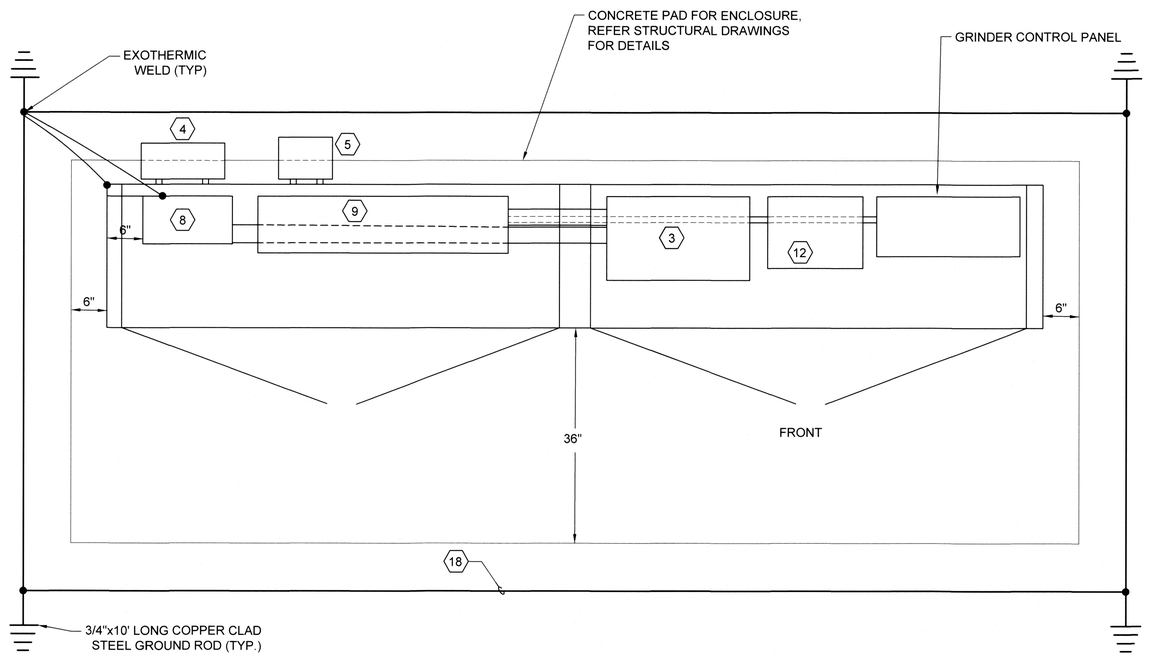


**EQUIPMENT MOUNTING DETAILS IN NEMA 3RX ENCLOSURE - PLAN**
SCALE 1' = 1'-0"

GRAPHIC SCALE
0 6" 1' 2'
SCALE: 1" = 1'-0"

REVISIONS

| NO. | DATE | BY | DESCRIPTION |
|---|---|---|---|
| | | | |

DESIGN INFORMATION
DESIGNED BY: KK
DRAWN BY: KK
CHECKED BY: RK
PROJECT MANAGER: AM

PROFESSIONAL CERTIFICATION. I HEREBY CERTIFY THAT THESE DOCUMENTS WERE PREPARED OR APPROVED BY ME, AND THAT I AM A DULY LICENSED PROFESSIONAL ENGINEER UNDER THE LAWS OF THE STATE OF MARYLAND. LICENSE NO. 8050 EXPIRATION DATE: 08/19/2023

SEAL
STATE OF MARYLAND · GUILLERMO S. ALVAREZ · REGISTERED · NO. 8050 · PROFESSIONAL ENGINEER
8/19/22

WASHINGTON COUNTY DEPARTMENT OF ENGINEERING SERVICES
16232 ELLIOTT PARKWAY
WILLIAMSPORT, MD 21795
WASHINGTON COUNTY, MARYLAND

NEW REGIONAL PUMP STATION
ELECTRICAL ONE LINE DIAGRAM

DHILLON ENGINEERING INC.
10902 Reisterstown Rd, Suite 204
Owings Mills, Maryland 21117
(410) 356-1095

EA Engineering, Science, and Technology, Inc., PBC
Hunt Valley Center
225 Schilling Circle, Suite 400
Hunt Valley, Maryland 21031
(410) 584-7000

DATE: APRIL 2022
PROJECT NUMBER: 1556701

E-605
SHEET: 73 OF 76

SP-21-025 / SWCP-21-020

FILE PATH: Z:\PROJECTS\EA\13-WASH COUNTY THREE PUMP STATIONS\04 DRAWINGS\BASE\1556701_TB 2020.DWG [MODEL] (OFLUA MAZALU 5/17/2019 3:28 PM

## PANEL SCHEDULE

PANELBOARD: 'LP' | BUS RATING 600A | PHASE 3 | MAIN OC DEVICE 400A, 480V, 3P
MIN. AIC 42KAIC | VOLTS 480/277V | WIRE 4 +1G
ENCL. NEMA 1 | MOUNTING SURFACE | BRANCH CKT. DEVICE BOLT ON
LOCATION NEMA 4X ENCLOSURE | NOTES SOLID NEUTRAL AND GROUND BUS

| CKT NO | DESCRIPTION | LOAD (VA) | COND. | WIRE GND | WIRE POWER | C.B. FR | C.B. TP | C.B. P | A B C | C.B. P | C.B. TP | C.B. FR | WIRE POWER | WIRE GND | COND. | LOAD (VA) | DESCRIPTION | CKT NO |
|---|---|---|---|---|---|---|---|---|---|---|---|---|---|---|---|---|---|---|
| 1 | PUMP CONTROL PANEL | 59,001 | 4" | #4 | 4#350KCMIL | 400 | 300 | 3 | | 3 | 15 | 100 | 3#10 | #10 | 3/4" | 893 | AERATOR BLOWER (1.5HP) | 2 |
| 3 | (75HP + 75HP + 7.5KW HEATER + 5KVA XFMR) | 59,001 | - | - | - | - | - | - | | - | - | - | - | - | - | 893 | - | 4 |
| 5 | | 59,001 | - | - | - | - | - | - | | - | - | - | - | - | - | 893 | - | 6 |
| 7 | SPARE | - | - | - | - | 100 | 15 | 3 | | 3 | 15 | 100 | 3#10 | #10 | 3/4" | 2,100 | GRINDER WETWELL 5HP | 8 |
| 9 | - | - | - | - | - | - | - | - | | - | - | - | - | - | - | 2,100 | - | 10 |
| 11 | - | - | - | - | - | - | - | - | | - | - | - | - | - | - | 2,100 | - | 12 |
| 13 | SPACE | - | - | - | - | - | - | - | | 2 | 15 | 100 | 3#10 | #10 | 3/4" | 2000 | 5kVA MINI POWER ZONE XFMR | 14 |
| 15 | - | - | - | - | - | - | - | - | | - | - | - | - | - | - | 2000 | - | 16 |
| 17 | - | - | - | - | - | - | - | - | | - | - | - | - | - | - | - | - | 18 |
| 19 | SPACE | - | - | - | - | - | - | - | | - | - | - | - | - | - | - | SPACE | 20 |
| 21 | - | - | - | - | - | - | - | - | | - | - | - | - | - | - | - | - | 22 |
| 23 | - | - | - | - | - | - | - | - | | - | - | - | - | - | - | - | - | 24 |
| 25 | SPACE | - | - | - | - | - | - | - | | - | - | - | - | - | - | - | SPACE | 26 |
| 27 | - | - | - | - | - | - | - | - | | - | - | - | - | - | - | - | - | 28 |
| 29 | - | - | - | - | - | - | - | - | | - | - | - | - | - | - | - | - | 30 |

CONNECTED LOAD PHASE A= 63994
B= 63994
C= 61994
TOTAL CONNECTED VA: 189982
TOTAL CONNECTED AMPS: 228

REMARKS: COPPER BUSING

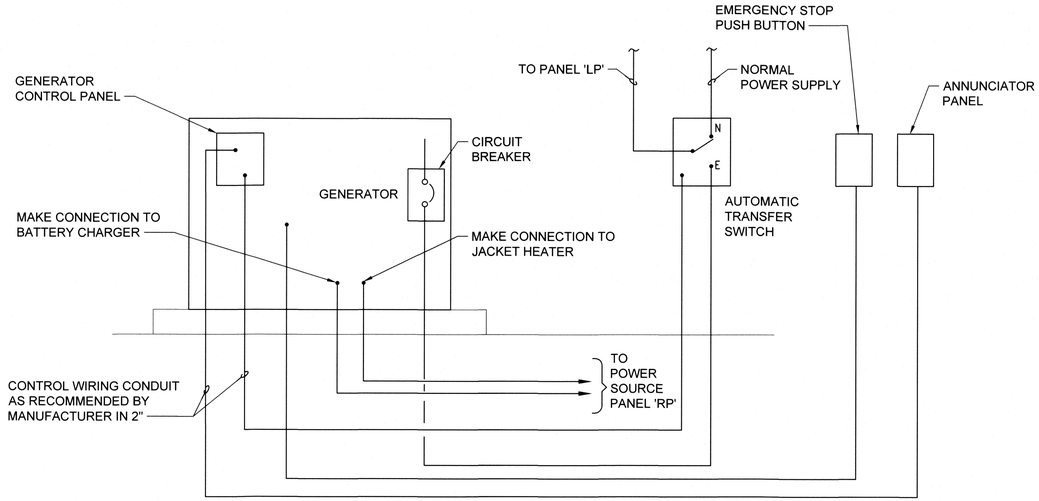


**EMERGENCY GENERATOR WIRING CONNECTION**
NOT TO SCALE

## MINI POWER ZONE PANEL SCHEDULE

PANELBOARD: 'MP' | VOLTS 240/120V | PHASE 1
MIN. AIC 18KAIC | MOUNTING SURFACE | WIRES 3
ENCL. NEMA 1
LOCATION IN ENCLOSURE

| | CKT NO | DESCRIPTION | LOAD (VA) | COND. | WIRE GND | WIRE POWER | C.B. FR | C.B. TP | C.B. P | A B | C.B. P | C.B. TP | C.B. FR | WIRE POWER | WIRE GND | COND. | LOAD (VA) | DESCRIPTION | CKT NO |
|---|---|---|---|---|---|---|---|---|---|---|---|---|---|---|---|---|---|---|---|
| | 1 | ENCLOSURE AND POLE LIGHTS | 50 | 1" | #12 | 2#12 | 100 | 20 | 1 | | 1 | 20 | 100 | 2#12 | #12 | 3/4" | 180 | ENCLOSURE RECEPTACLE | 2 |
| | 3 | SPARE | - | - | - | - | 100 | 20 | 1 | | 1 | 20 | 100 | 2#12 | #12 | 3/4" | 500 | HEATER IN ENCLOSURE | 4 |
| * | 5 | GENERATOR BLOCK HEATER | 750 | 1" | #12 | 2#12 | 100 | 20 | 2 | | 1 | 15 | 100 | 2#12 | #12 | 3/4" | 100 | FLOW METER | 6 |
| | 7 | - | 750 | - | - | - | - | - | - | | 1 | 15 | 100 | - | - | - | - | SPARE | 8 |
| * | 9 | BATTERY CHARGER | 1000 | 1" | #12 | 2#12 | 100 | 20 | 1 | | 1 | 15 | 100 | - | - | - | - | SPARE | 10 |

CONNECTED LOAD PHASE A= 1880
B= 1250
TOTAL CONNECTED VA: 3130
TOTAL CONNECTED AMPS: 13

REMARKS: COPPER BUSING

* GENERATOR BLOCK HEATER AND BATTERY CHARGER WIRES SHALL RUN IN 1" UNDERGROUND DUCT

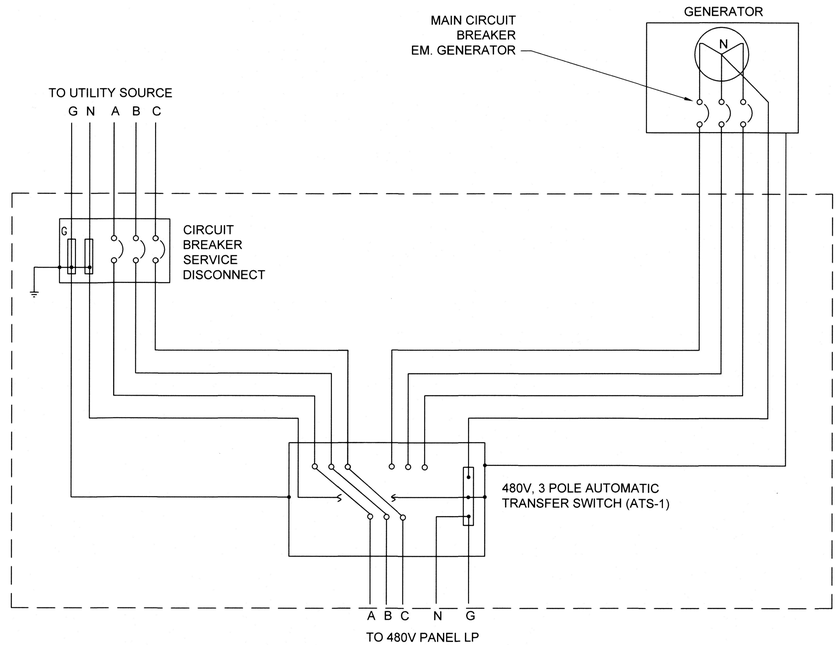


**EMERGENCY GENERATOR, ATS AND MAIN CIRCUIT BREAKER GROUNDING CONNECTION DETAIL**
NOT TO SCALE

REVISIONS: NO. | DATE | BY | DESCRIPTION

DESIGN INFORMATION: DESIGNED BY: KK | DRAWN BY: KK | CHECKED BY: RK | PROJECT MANAGER: AM

PROFESSIONAL CERTIFICATION. I HEREBY CERTIFY THAT THESE DOCUMENTS WERE PREPARED OR APPROVED BY ME, AND THAT I AM A DULY LICENSED PROFESSIONAL ENGINEER UNDER THE LAWS OF THE STATE OF MARYLAND, LICENSE NO. 8050 EXPIRATION DATE: 08/19/2023

SEAL: STATE OF MARYLAND · STUART S. OTTEN · REGISTERED NO. 8050 · PROFESSIONAL ENGINEER

WASHINGTON COUNTY DEPARTMENT OF ENGINEERING SERVICES
16232 ELLIOTT PARKWAY
WILLIAMSPORT, MD 21795
WASHINGTON COUNTY, MARYLAND

NEW REGIONAL PUMP STATION
ELECTRICAL SCHEDULES AND DETAILS

DHILLON ENGINEERING INC.
10902 Reisterstown Rd, Suite 204
Owings Mills, Maryland 21117
(410) 356-1095

EA Engineering, Science, and Technology, Inc., PBC
Hunt Valley Center
225 Schilling Circle, Suite 400
Hunt Valley, Maryland 21031
(410) 584-7000

DATE: APRIL 2022
PROJECT NUMBER: 1556701

E-606
SHEET: 74 OF 76

SP-21-025 / SWCP-21-020

FILE PATH: Z:\PROJECTS\EA\19 WASH COUNTY THREE PUMP STATIONS\04 DRAWINGS\BASE\1556701_TB 2020.DWG [MODEL] OFELIA MAZALU 5/17/2019 3:38 PM

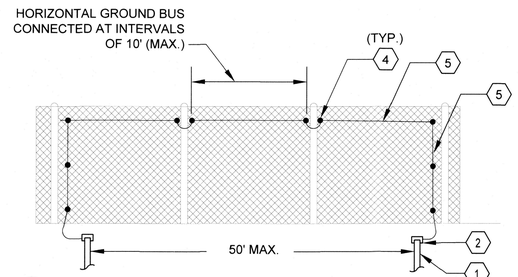


1 E-607 **TYPICAL FENCE SECTION GROUNDING DETAILS**
NOT TO SCALE

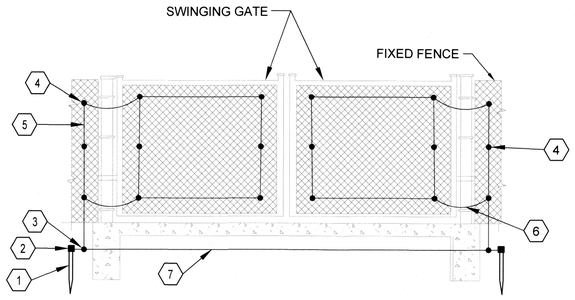


2 E-607 DOUBLE SWINGING GATE GROUNDING DETAILS
NOT TO SCALE

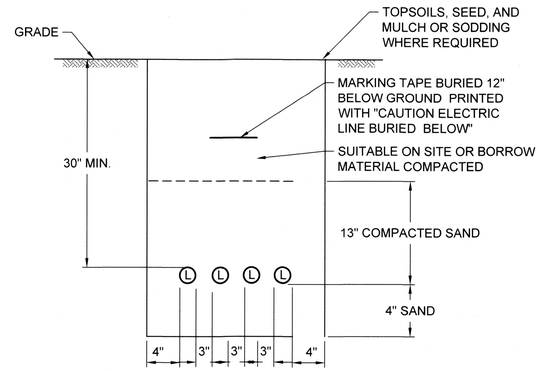


7 E-607 **TRENCHING DETAILS FOR DIRECT BURIED FOUR CONDUITS**
NOT TO SCALE

## GENERAL NOTES:

1. PROVIDE GROUNDING FENCE AT ALL LOCATIONS OF PUMPING STATIONS

## SPECIFIC NOTES (X):

1. GROUND ROD, COPPERWELD TYPE 3/4" DIA. X 10 FT, LONG.
2. CONNECTOR, FOR CONNECTING SIZE #1/0 AWG CABLE TO 3/4" DIA. GROUND ROD. CADWELD TYPE GR CAT, NO. GRC-182C OR EQUAL.
3. CONNECTOR, FOR CONNECTING #1/0 GROUND BUS TO #4 AWG TAP AT RIGHT ANGLES, CADWELD TYPE TA CAT, NO. TAC-2CIL OR EQUAL.
4. CONNECTOR, FOR CABLE TO CABLE. BURNDY SERVIT TYPE KS OR EQUAL. SIZE AS REQUIRED.
5. CONDUCTOR, ENCAPSULATED COPPER, STRANDED, SIZE #4 AWG.
6. BRAID, FLEXIBLE, 15/16" WIDE ENCAPSULATED COPPER. (#4 AWG EQUIVALENT).
7. CONDUCTOR, BARE COPPER STRANDED, SIZE #1/0 AWG, 30" UNDERGROUND.

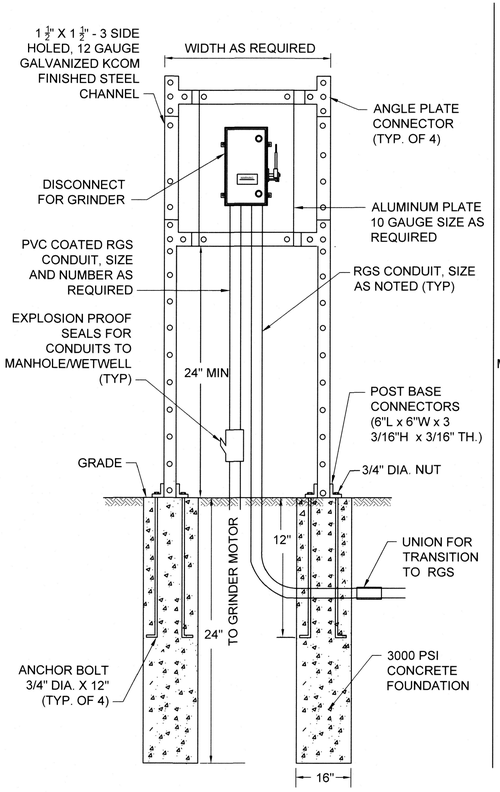


3 E-607 **GRINDER DISCONNECT MOUNTING DETAILS**
NOT TO SCALE

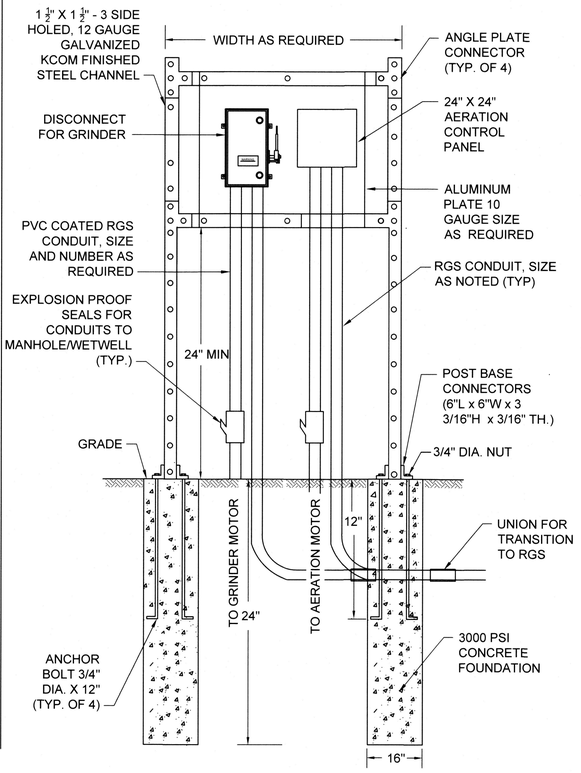


4 E-607 **GRINDER DISCONNECT AND AERATOR CONTROL PANEL MOUNTING DETAILS**
NOT TO SCALE

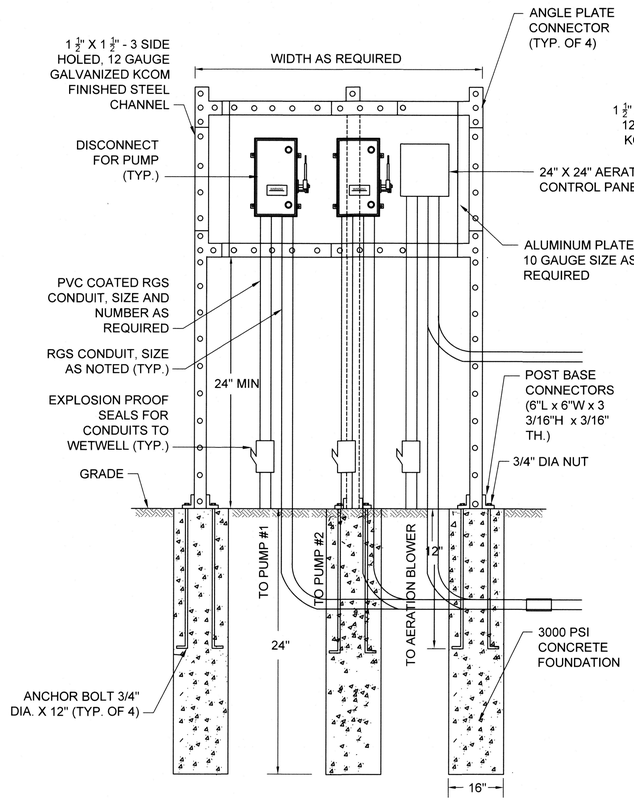


5 E-607 **SUBMERSIBLE PUMP DISCONNECTS AND AERATOR BLOWER CONTROL PANEL MOUNTING DETAILS**
NOT TO SCALE

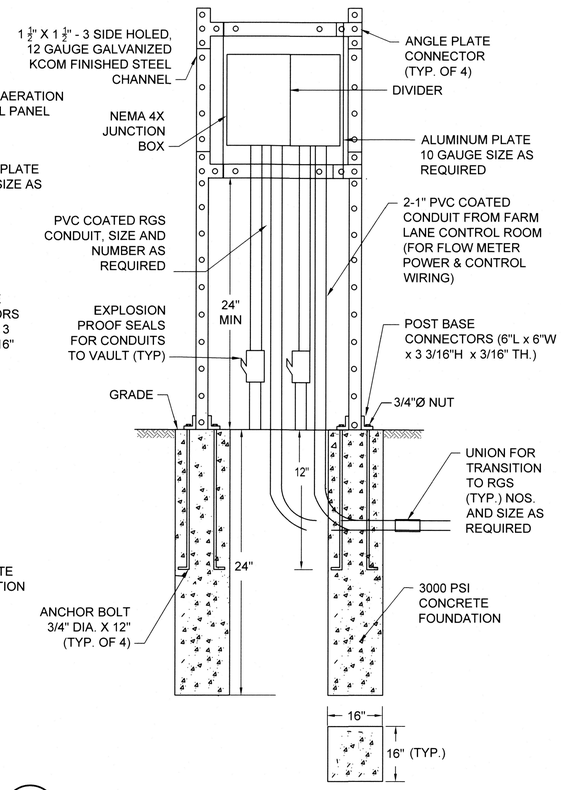


6 E-607 **JUNCTION BOX MOUNTING DETAILS AT VAULT**
NOT TO SCALE

REVISIONS

| NO. | DATE | BY | DESCRIPTION |
|---|---|---|---|

DESIGN INFORMATION

| DESIGNED BY: | DRAWN BY: | CHECKED BY: | PROJECT MANAGER: |
|---|---|---|---|
| KK | KK | RK | AM |

PROFESSIONAL CERTIFICATION. I HEREBY CERTIFY THAT THESE DOCUMENTS WERE PREPARED OR APPROVED BY ME, AND THAT I AM A DULY LICENSED PROFESSIONAL ENGINEER UNDER THE LAWS OF THE STATE OF MARYLAND, LICENSE NO. 8050 EXPIRATION DATE: 08/19/2023

SEAL: STATE OF MARYLAND — GURMEET S. DHILLON — REGISTERED NO. 8050 — PROFESSIONAL ENGINEER — 4/7/22

WASHINGTON COUNTY DEPARTMENT OF ENGINEERING SERVICES
16232 ELLIOTT PARKWAY
WILLIAMSPORT, MD 21795
WASHINGTON COUNTY, MARYLAND

ELECTRICAL DETAILS I


EA Engineering, Science, and Technology, Inc., PBC
Hunt Valley Center
225 Schilling Circle, Suite 400
Hunt Valley, Maryland 21031
(410) 584-7000


DATE: APRIL 2022

PROJECT NUMBER: 1556701

E-607
SHEET: 75 OF 76


DHILLON ENGINEERING INC.
10902 Reisterstown Rd, Suite 204
Owings Mills, Maryland 21117
(410) 356-1095


SP-21-025 / SWCP-21-020

FILE PATH: Z:\PROJECTS\EA\19 WASH COUNTY THREE PUMP STATIONS\04 DRAWINGS\BASIS\1556701_TB 2020.DWG [MODEL] ( DFELIA MAZULI 5/17/2019 3:38 PM

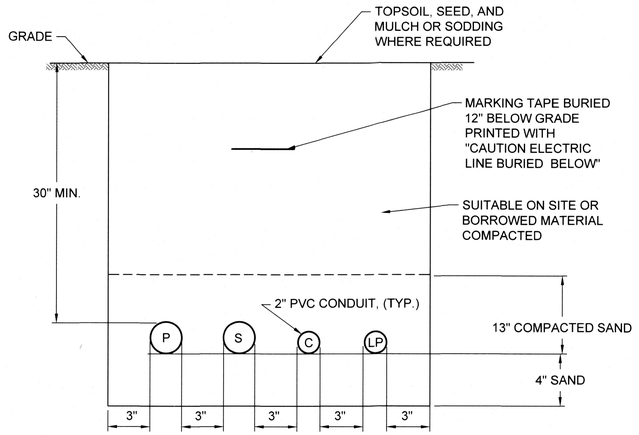


**LEGEND:**

- (P) 4" UCT FOR POWER FROM GENERATOR TO ATS, SIZE AS SHOWN ON PLAN
- (S) 4" DUCT SPARE
- (C) 2" DUCT FOR CONTROL POWER FROM GENERATOR TO ATS
- (LP) 2" DUCT-120V CIRCUITS FOR GENERATOR JACKET HEATER AND BATTERY CHARGER

1 E-608 **TRENCHING DETAILS FOR DIRECT BURIED GENERATOR CONDUIT**
NOT TO SCALE

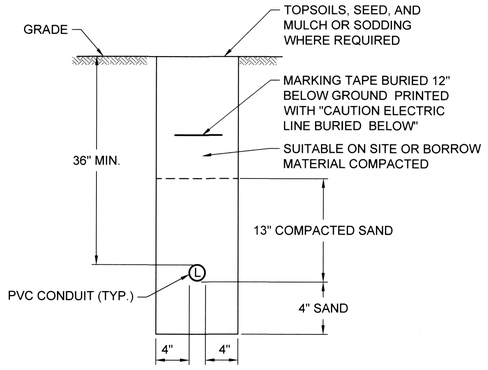


2 E-608 **TRENCHING DETAILS FOR DIRECT BURIED SINGLE CONDUIT**
NOT TO SCALE

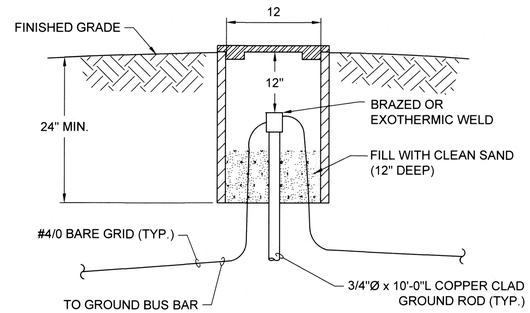


3 E-608 **GROUNDING WELL INSTALLATION DETAIL**
NOT TO SCALE

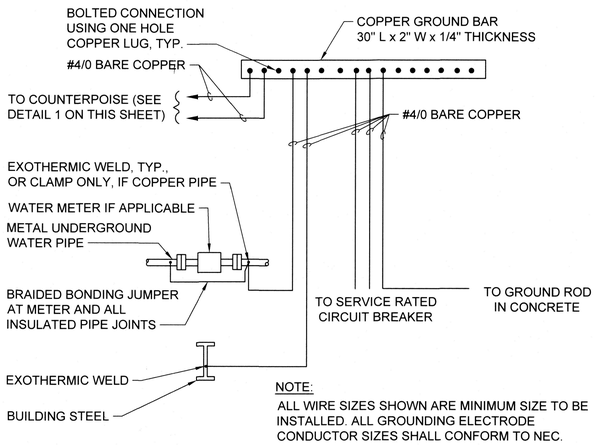


NOTE:
ALL WIRE SIZES SHOWN ARE MINIMUM SIZE TO BE INSTALLED. ALL GROUNDING ELECTRODE CONDUCTOR SIZES SHALL CONFORM TO NEC.

4 E-608 **TYPICAL BUILDING MAIN GROUND ELECTRODE SYSTEM DETAIL**
NOT TO SCALE

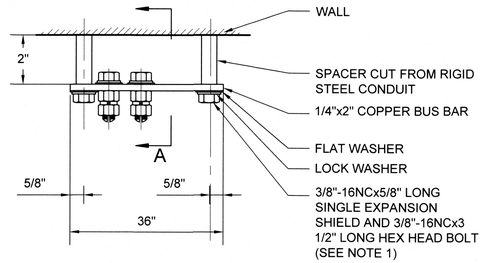


PLAN

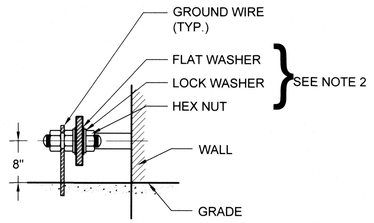


SECTION A-A

5 E-608 **GROUND BAR MOUNTING DETAILS**
NOT TO SCALE

NOTES:

1. BOLTS AND WASHERS USED TO SECURE THE GROUND BUS TO THE WALL SHALL BE CADMIUM STEEL OR 304 STAINLESS STEEL.
2. BOLTS, NUTS, WASHERS TO CONNECT GROUND WIRE TO GROUND BUS SHALL BE STAINLESS STEEL.

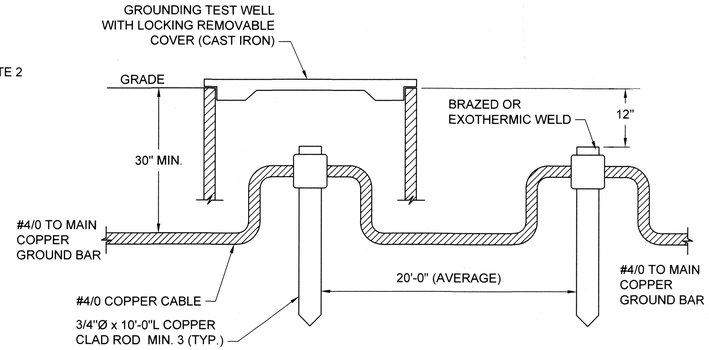


6 E-608 **GROUNDING ROD INSTALLATION DETAIL**
NOT TO SCALE

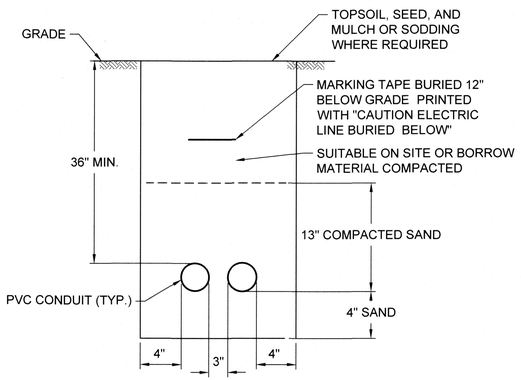


7 E-608 **TRENCHING DETAILS FOR DIRECT BURIED TWO CONDUITS**
NOT TO SCALE

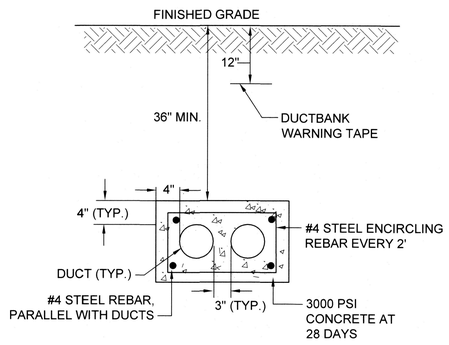


8 E-608 **2W X 1H CONCRETE ENCASED DUCTBANK**
NOT TO SCALE

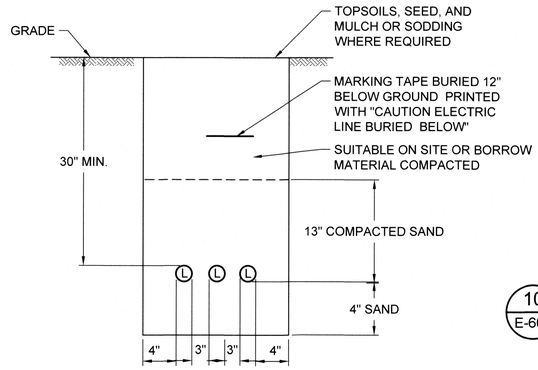


9 E-608 **TRENCHING DETAILS FOR DIRECT BURIED THREE CONDUITS**
NOT TO SCALE

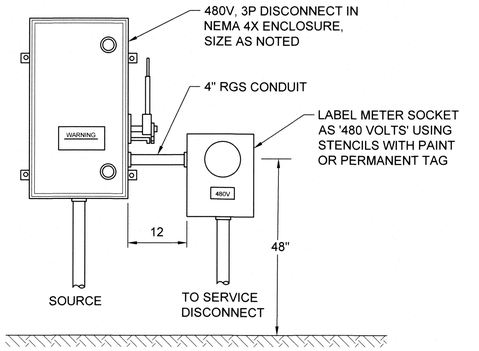


10 E-608 **DISCONNECT AND METER MOUNTING DETAILS ON WALL**
NOT TO SCALE

REVISIONS

| NO. | DATE | BY | DESCRIPTION |
|---|---|---|---|
| | | | |

DESIGN INFORMATION

| DESIGNED BY: | DRAWN BY: | CHECKED BY: | PROJECT MANAGER: |
|---|---|---|---|
| KK | KK | RK | AM |

PROFESSIONAL CERTIFICATION. I HEREBY CERTIFY THAT THESE DOCUMENTS WERE PREPARED OR APPROVED BY ME, AND THAT I AM A DULY LICENSED PROFESSIONAL ENGINEER UNDER THE LAWS OF THE STATE OF MARYLAND, LICENSE NO. 8050 EXPIRATION DATE: 08/19/2023

SEAL

STATE OF MARYLAND · CHRISTOPHER R. PHILLON · REGISTERED · NO. 8050 · PROFESSIONAL ENGINEER

WASHINGTON COUNTY DEPARTMENT OF ENGINEERING SERVICES
16232 ELLIOTT PARKWAY
WILLIAMSPORT, MD 21795
WASHINGTON COUNTY, MARYLAND

ELECTRICAL DETAILS II

EA Engineering, Science, and Technology, Inc., PBC
Hunt Valley Center
225 Schilling Circle, Suite 400
Hunt Valley, Maryland 21031
(410) 584-7000

DATE: APRIL 2022

PROJECT NUMBER: 1556701

E-608
SHEET: 76 OF 76

DEI
DHILLON ENGINEERING INC.
10902 Reisterstown Rd, Suite 204
Owings Mills, Maryland 21117
(410) 356-1095

SP-21-025 / SWCP-21-020

FILE PATH: Z:\PROJECTS\EA\19 WASH COUNTY THREE PUMP STATIONS\04 DRAWINGS\BASE\155670\1_TB 2020.DWG [MODEL] DF61JA MAZAUJ 5/17/2019 3:38 PM