SITE PLAN

FOR

ROWLAND ON HOLDINGS, LLC

SITUATED AT THE SOUTH END OF FRENCH LANE

EAST OF GREENCASTLE PIKE MD ROUTE 63 AND NORTH OF INTERSTATE 70

WASHINGTON COUNTY, MARYLAND

APPROVALS

MD-ENG-6A USDA
1/89 SCS

UTILITY NOTIFICATION

The Soil Conservation District makes no representation as to the existence or nonexistence of any utilities at the construction site. Shown on these construction drawings are those utilities which have been identified. It is the responsibility of the landowners or operators and contractors to assure themselves that no hazard exists or damage will occur to utilities. It is suggested that Miss Utility be contacted at: Phone No. 1-800-257-7777

DISTURBED AREA QUANTITY

THE TOTAL AREA TO BE DISTURBED SHOWN ON THESE PLANS HAS BEEN DETERMINED TO BE APPROXIMATELY 5.3 ACRES AND THE TOTAL AMOUNT OF EXCAVATION AND FILL AS SHOWN ON THESE PLANS HAS BEEN COMPUTED TO BE APPROXIMATELY 10,977 CU. YDS. OF EXCAVATION AND APPROXIMATELY 6,080 CU. YDS. OF FILL.

APPROVED:
WASHINGTON COUNTY DIVISION OF ENGINEERING

SIGNATURE DATE

WASHINGTON COUNTY SOIL CONSERVATION DISTRICT
SOIL EROSION AND SEDIMENT CONTROL PLAN APPROVAL

By: _____

Date: _____

(PLAN IS VALID FOR TWO YEARS FROM DATE OF APPROVAL)

ENGINEER'S STORMWATER MANAGEMENT CERTIFICATION

"I verify and affirm that the Construction for the Stormwater Management Facilities as performed either meets or exceeds the requirements and design intent of this plan, including all specifications and referenced standards, and has been completed in accordance with good construction practices. I also verify and affirm that I have reviewed the construction inspection documentation and the as-built information; that it has been done in accordance with Washington County requirements and at a level deemed necessary to assure the Verification made herein; and all discrepancies between the as-built information and approved plans have been noted and are considered acceptable to the Consultant."

SIGNATURE DATE SEAL

OWNER / DEVELOPERS CERTIFICATION

"I/We certify all/any parties responsible for clearing, grading, construction and/or development will; be done pursuant to this plan and responsible personnel involved in the construction project will have a Certificate of Training at a Maryland Dept. of the Environment approved training program for the control of soil erosion and sediment."

DATE PRINTED NAME

SIGNATURE

OWNER / DEVELOPERS CERTIFICATION

"I/we hereby certify that all clearing, grading, construction and/or development will be done pursuant to this plan and in accordance with the Stormwater Management Ordinance of Washington County and the policy on construction of subdivision infrastructure for acceptance and ownership by Washington County (S-3)."

DATE PRINTED NAME

SIGNATURE

ENGINEER / ARCHITECT DESIGN CERTIFICATION

I hereby certify this plan for soil erosion and sediment control has been designed in accordance with local ordinances, COMAR 26.17.01.07, and Maryland Standards and Specifications for Soil Erosion and Sediment Control.

12.21.2021	49808	
DATE	REG. NO.	SIGNATURE

OWNER/DEVELOPER:
ROWLAND ON HOLDINGS, LLC
14703 INDIAN SPRINGS RD
HANCOCK, MD 21750

ATTN: JIM ROWLAND
PHONE: (301)-491-0818

CIVIL ENGINEER / SURVEYOR:
FREDERICK,SEIBERT & ASSOCIATES, INC.
128 S. POTOMAC ST.
HAGERSTOWN, MD 21740

PROJECT MANAGER: ADAM HAGER
EMAIL: AHAGER@FSA-INC.COM
PHONE: (301)-791-3650

LOCATION PLAN

SCALE: 1" = 50'

TAX MAP - GRID - PARCEL: 0048-0009-0882
PROPERTY ACCOUNT #02066009

VICINITY MAP

SCALE: 1" = 2,000'

ADC MAP 20, A7
USGS MAPS (MASON DIXON & WILLIAMSPORT)

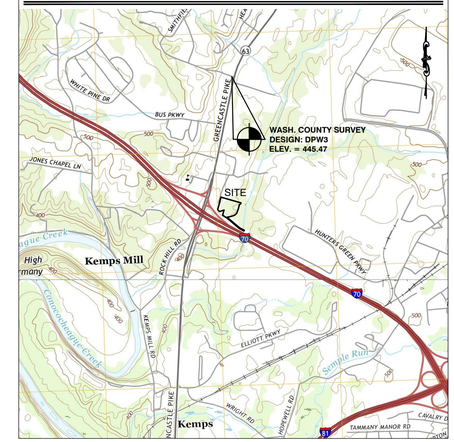

SHEET INDEX

TYPE	NUMBER	TITLE
C-001	SHEET 01	COVER SHEET
C-002	SHEET 02	NOTES & LEGENDS
C-101	SHEET 03	EXISTING CONDITIONS
C-102	SHEET 04	GRADING, EROSION & SEDIMENT CONTROL PLAN
C-103	SHEET 05	SITE & DIMENSION PLAN
C-301	SHEET 06	STORMWATER MANAGEMENT PLAN
C-302	SHEET 07	STORMWATER MANAGEMENT DETAILS & NOTES
C-501	SHEET 08	CONSTRUCTION DETAILS & NOTES - E & S CONTROLS

SENSITIVE AREA NOTICE

The stream buffers shown hereon are established pursuant to the requirements of the Washington County Subdivision Ordinance Article IV, Section 409. In an effort to preserve or improve water quality, the property owner is required to establish and thereafter maintain in perpetuity vegative ground cover in accordance with urban best management practices recommended by the Washington County Soil Conservation District. No permanent structures or construction are permitted within the stream buffer except those designed to improve water quality or flow as approved by the Washington County Planning Commission in accordance with all applicable regulations, laws, and policies. No septic systems shall be constructed within the buffer nor shall any reserve area be established within the buffer.

Non - ESD Practices (Chapter 3 - Structural Practices)

TYPE	NO.	DA (ACRES) (To Structure)	IMPERVIOUS DA (ACRES) (To Structure)	RCN	WQv (Ac.-Ft.)	ESDv (Ac.-Ft)	PE Addressed (In)
Bio Pond	East	2.86 Ac	2.08 Ac	88	0.30 acft	0.30 acft	2.24
Bio Pond	West	2.50 Ac	1.78 Ac	91	0.40 acft	0.40 acft	2.24

Know what's **below.**
Call before you dig.

STATE OF MARYLAND
FREDERICK M. FREDERICK
49808
PROFESSIONAL ENGINEER
12/21/2021

Professional Certification:
I hereby certify that these documents were prepared or approved by me, and that I am a duly licensed professional engineer under the laws of the State of MARYLAND License # 49808
Expiration Date 06-24-2022

FSA
FREDERICK, SEIBERT & ASSOCIATES, INC.
CIVIL ENGINEERS • SURVEYORS • LANDSCAPE ARCHITECTS • LAND PLANNERS
128 SOUTH POTOMAC STREET HAGERSTOWN, MD 21740 301-791-3650
WEST MAIN STREET GREENCASTLE, PA 17225 717-597-1837
1446 SOUTH HANOVER STREET CARLISLE, PA 17013 717-243-7611
WEST MAIN STREET NEW BLOOMFIELD, PA 17068 717-582-2161
fsa-inc.com

DATE
MARK DESCRIPTION

NOT APPROVED FOR CONSTRUCTION

ROWLAND ON HOLDINGS, LLC
SITUATE AT THE SOUTH END OF FRENCH LANE
EAST OF GREENCASTLE PIKE MD ROUTE 63 AND NORTH OF INTERSTATE 70
WASHINGTON COUNTY, MARYLAND
ROWLAND ON HOLDINGS, LLC
14702 INDIAN SPRINGS RD. HANCOCK, MD 21740
(301)-491-0818

PROJECT NO.	6454.REM
DWN BY: DWH	DATE: 09-22-2021
PROJECT MANAGER: ADAM HAGER	EMAIL: ahager@fsa-inc.com
TAX MAP-GRID-PARCEL	0048-0009-0882
SCALE	1" = 50'

SHEET TITLE

COVER SHEET

C-001
SHEET 01 OF 08

SP-21-036

GENERAL NOTES

1. Any damage to adjoining public roads, utilities, etc. during construction will be repaired in kind by the contractor.
2. No subsurface investigation has been performed by Frederick, Seibert and Associates, Inc. to determine ground water, rock, sinkholes or any other natural or man-made existing features. See geotech report by Triad Engineering for sub-surface findings.
3. FSA, Inc. assumes no liability for the location of any above ground and below ground utilities. Existing utilities are shown from the best available information. Contractor to field verify location and depth of all above and below ground utilities prior to construction.
4. The contractor shall locate existing utilities in advance of construction operations in the vicinity of proposed utilities.
5. The contractor shall take all necessary precautions to protect the existing utilities and to maintain uninterrupted service. Any damage incurred due to the contractor's operation shall be repaired immediately at the contractor's expense. Contractor to use caution in areas where low hanging wires exist.
6. All utilities shall be cleared by a minimum of 1'-0". All utility poles shall be cleared by a minimum of 2'-0" or tunneled if required.
7. The Contractor shall notify the following utilities or agencies at least five (5) days before starting work shown on these drawings:

Miss Utility	1-800-257-7777
Potomac Edison	1-800-255-3443
Verizon	(301) 790-7124
Antietam Cable	(240) 420-2082
Washington County Engineering & Construction	(240) 313-2460
Washington County Soil Conservation District	(301) 797-6821 Ext. 3

8. The contractor shall be responsible for coordination of his construction with the construction of other contractors.
9. Benchmarks to be established by FSA prior to the start of construction.
10. The contractor shall notify the Architect/Engineer, before construction, of any conflicts between the plans and actual field conditions.
11. The contractor shall protect all utilities and culvert pipes during construction by insuring proper cover, increasing cover, or constructing roadway and parking through base course before loading site with heavy vehicles.
12. Job site safety is the sole responsibility of the contractor. The Contractor shall perform all excavation in accordance with O.S.H.A. Regulations for trench safety.
13. The contractor shall perform his own field inspection and surveys (if necessary) to determine the limit of earthwork needed to complete this project. Any earthwork quantities that may be shown hereon are preliminary estimates only, and are intended for Soil Erosion Control plan review, if required. There has been no correction made to the earthwork quantities shown hereon due to the compaction of fill.
14. The contractor shall be aware that in the event of discrepancy between scaled and figured dimensions shown on the plan, the figured dimensions shall govern.
15. Sediment erosion control measures shall be installed per sediment erosion control plans, details and specifications.
16. Please refer to Geotechnical Report completed by Triad Engineering for load bearing fills, etc.
17. The entire area included within the proposed limits of cut and fill shall be stripped of all root material, trash and other organic and otherwise objectionable, non-complying and unsuitable soils and materials.
18. It shall be distinctly understood that failure to mention specifically any work which would naturally be required to complete the project shall not relieve the contractor of his responsibility to complete such work.
19. All handicapped parking spaces shall be designed, ramped and signed to meet the minimum requirements of the Maryland code for the handicapped.
20. The existing site contours shown hereon are LIDAR 1' contours and field checked by FSA in August 2021. (Contour accuracy is to plus or minus one half the contour interval).
21. Limit of disturbed areas are to be the limit of property ownership, unless otherwise noted.
22. This project has a projected start date of March 2022 and a completion date of June 2022.
23. There are no Board of Zoning Appeals Cases for this property.
24. There are no parks, open space within or adjoining the tract.
25. All existing drainage culverts and drainage easements are to be maintained and unaltered.
26. There are no existing or proposed pumping stations in this development.
27. Proposed stormwater management will consist of on-site bio-retention facilities.
28. The purpose of this site plan is for the proposed construction of a gravel storage lot.
29. No permanent structures (e.g., fences, sheds, play equipment, retaining walls) shall be permitted within any storm drainage easement either shown or described on the final plat of subdivision.
30. All grading on lot, either before or after the construction of a dwelling or appurtenances, shall be the full responsibility of the lot owner.
31. This project will require a third-party qualified professional to be present at the preconstruction meeting scheduled with Washington County Division of Construction and the Washington County Soil Conservation District. Construction inspection will be required for this project per the "Roadway and Stormwater Management Construction Verification Procedures" dated October 17, 2008.
32. Developer/Contractor must contact the certifying engineer and Washington County at least 5 days prior to the start of construction of the stormwater management system to schedule and coordinate inspection time schedules.
33. A public Works Agreement and performance security will be required for all improvements within the County right-of-way that are not otherwise regulated under a utility permit or entrance permit.

ZONING DATA

ZONING DISTRICT	HI - HIGHWAY INTERCHANGE
BUILDING HEIGHT	75 FT.
MINIMUM YARD SETBACK:	
FRONT	40 FT.
*SIDE	10 FT.
*REAR	10 FT.
BOARD OF ZONING APPEALS' CASE	NONE

SITE DATA

TAX MAP - GRID - PARCEL	0048-0009-0882
ELECTION DISTRICT	02
ACCOUNT NUMBER	066009
LIBER / FOLIO	05142 / 00166
PLAT NUMBER	5870-5872, 8283-8284, & 10915
AREA SUMMARY:	
PARCEL AREA	5.60 AC.
DISTURBED AREA	230,316 S.F. / 5.3 AC.
EXISTING IMPERVIOUS	0 S.F. / 0.0 AC. (0%)
PROPOSED TOTAL IMPERVIOUS	170,329 S.F. / 3.91 AC. (70%)
EXISTING USE	UNDEVELOPED OPEN LOT
PROPOSED USE	GRAVEL TRACTOR TRAILER STORAGE LOT (PERMITTED USE)
HOURS OF OPERATION	24 HOURS A DAY / 7 DAYS A WEEK
EMPLOYEE SUMMARY	NONE
SITE LIGHTING:	
EXISTING	NONE
PROPOSED	NONE
SITE SIGNAGE:	
EXISTING	NONE
PROPOSED	NONE
ROAD CLASSIFICATION:	
LOCAL	FRENCH LANE
WAIVER AND/OR VARIANCE	NONE
FOREST CONSERVATION	PREVIOUSLY ADDRESSED BY FOREST RETENTION EASEMENT PLATS 5870-5872 & 8283-8284
WATERSHED:	
NAME	CONOCOCHEAGUE CREEK
NUMBER	02-14-05-04
FEMA PANEL #	24043C0118D

LEGEND

EXISTING / PROPOSED

SUBJECT BOUNDARY
BUILDING SETBACK LINE
RIGHT OF WAY
EASEMENT LINE
ADJOINER BOUNDARY
FENCE (METAL)
FENCE (WOODEN)
DITCH (STREAM)
EDGE OF WATER
WETLAND
FLOODPLAIN
SOIL BOUNDARY
RAILWAY
CENTERLINE
EDGE OF PAVEMENT
EDGE OF GRAVEL
CURB
WALL
GUARD RAIL
EDGE OF CONCRETE
BUILDING
MAIL BOX
SIGN (ROAD)
SIGN (SITE)
TRAFFIC SIGNAL

TOPOGRAPHIC FEATURES
CONTOUR (INDEX)
CONTOUR (INTERMEDIATE)
SPOTS ELEVATION

VEGETATION AREAS
TREELINE
DECIDUOUS TREES — SEE LANDSCAPE SHEET FOR LEGEND
EVERGREEN TREES — SEE LANDSCAPE SHEET FOR LEGEND

SANITARY SEWER
GRAVITY LINE
FORCE MAIN LINE
LATERAL
MANHOLE
CLEANOUT
VALVE

WATER
COLD WATER LINE
HOT WATER LINE
MANHOLE
FIRE HYDRANT
VALVE
METER
WELL

STORM DRAINAGE
STORM SEWER LINE
ROOF DRAIN LINE
MANHOLE
INLETS
CLEANOUT

UTILITIES
GAS LINE
ELECTRICAL LINE
FIBER OPTIC LINE
COMMUNICATION LINE
OVERHEAD LINES
MANHOLE
PEDS, BOX, & ETC
POLE
LIGHT POLE
GAS METER
GAS VALVE

LEGEND - ABBREVIATIONS

AASHTO	AMERICAN ASSOCIATION OF STATE HIGHWAY AND TRANSPORTATION OFFICIALS	OC	ON CENTER
ADS	ADVANCED DRAINAGE SYSTEM	PC	POINT OF CURVE
ASTM	AMERICAN SOCIETY FOR TESTING AND MATERIAL	PCC	POINT OF COMPOUND CURVE
AWWA	AMERICAN WATER WORKS ASSOCIATION	PGL	PROPOSED GRADE LINE
BLDG	BUILDING	PRC	POINT OF REVERSE CURVE
BOT	BOTTOM	PT	POINT OF TANGENT
CIP	CAST IRON PIPE	PVC	POINT OF VERTICAL CURVE
CL	CENTERLINE	PVI	POINT OF VERTICAL INTERSECTION
CMP	CORRUGATED METAL PIPE	PVT	POINT OF VERTICAL TANGENT
CO	SANITARY SEWER CLEAN-OUT	ROW	RIGHT-OF-WAY
COMM	COMMUNICATION	SAN	SANITARY
CONC	CONCRETE	SCE	STABILIZED CONSTRUCTION ENTRANCE
DA	DRAINAGE AREA	SDR	STANDARD DIMENSION RATIO
DIA	DIAMETER	SIP	SET IRON PIN
EGL	EXISTING GRADE LINE	SD	STORM DRAINAGE
EX	EXISTING	SDMH	STORM DRAIN MANHOLE
EIP	EXISTING IRON PIN	SF	SQUARE FEET
FFE	FINISH FLOOR ELEVATION	SS	SANITARY SEWER
FH	FIRE HYDRANT	SSMH	SANITARY SEWER MANHOLE
GV	GATE VALVE	STA	STATION
HGL	HYDRAULIC GRADE LINE	STD	STANDARD
HDPE	HIGH DENSITY POLYETHYLENE	SY	SQUARE YARDS
INV	INVERT	TAN	TYPE AS NOTED
LF	LINEAR FEET	TEMP	TEMPORARY
MAX	MAXIMUM	TS	TOP OF STRUCTURE
MB	MAIL BOX	TG	TOP OF GRATE
MIN	MINIMUM	TR	TOP OF RIM
MJ	MECHANICAL JOINT	TYP	TYPICAL
NO	NUMBER	U/P	UTILITY POLE
NIC	NOT IN CONTRACT	VIF	VERIFY IN FIELD
NTS	NOT TO SCALE	WL	WATERLINE
OAC	OR APPROVED EQUAL	WM	WATER METER
		WV	WATER VALVE

NOT APPROVED FOR CONSTRUCTION

STATE OF MARYLAND — TREVOR M. FREDERICK — 49808 — PROFESSIONAL ENGINEER
12/21/2021

Professional Certification: I hereby certify that these documents were prepared or approved by me, and that I am a duly licensed professional under the laws of the State of: MARYLAND, License # 49808, Expiration Date 08-24-2022.

FSA
FREDERICK, SEIBERT & ASSOCIATES, INC. ©2021 fsa-inc.com
CIVIL ENGINEERS • SURVEYORS • LANDSCAPE ARCHITECTS • LAND PLANNERS
128 SOUTH POTOMAC STREET, HAGERSTOWN, MD 21740, 301.791.3650
20 WEST BALTIMORE STREET, GREENCASTLE, PA 17225, 717.597.1007
505 SOUTH HANOVER STREET, CARLISLE, PA 17013, 717.701.8111
15 EAST MAIN STREET, NEW BLOOMFIELD, PA 17068, 717.275.7531

MARK: | DESCRIPTION: | DATE:

ROWLAND ON HOLDINGS, LLC
SITUATE AT THE SOUTH END OF FRENCH LANE
EAST OF GREENCASTLE PIKE MD ROUTE 63 AND NORTH OF INTERSTATE 70
WASHINGTON COUNTY, MARYLAND

ROWLAND ON HOLDINGS, LLC
14702 INDIAN SPRINGS RD. HANCOCK, MD 21740
(301)-491-0818

PROJECT NO.	6454.REM
DWN BY: DWH	DATE: 09-22-2021
PROJECT MANAGER: ADAM HAGER	EMAIL: ahager@fsa-inc.com
TAX MAP-GRID-PARCEL	0048-0009-0882
SCALE	NTS

SHEET TITLE
NOTES & LEGENDS

C-002
SHEET 02 OF 08

SP-21-036

P:\SHARED FOLDERS\PROJECTS\6454 FRENCH LANE\6454\6454-REM\DWG\CONSTRUCTION SET\6454-REM-01-C001-COVER SHEET.DWG 12/21/2021

LINE	BEARING	DISTANCE
L1	S 32°50'26" W	21.76'
L2	N 25°54'40" W	11.56'

NOTE: THE STREAM BUFFER SHOWN HEREON IS GREATER THAN REQUIRED DUE TO THE 100 YEAR FLOODPLAIN.

SITE RESOURCES

FLOODPLAINS	0.20 AC.	
STREAM BUFFERS		
FOREST	0.37 AC.	
STEEP SLOPES	0.05 AC.	
HIGHLY ERODIBLE SOILS	1.05 AC.	

SOILS	NAME	K-FACTOR	HSG
HcC	Hagerstown-Rock outcrop complex, 8 to 15 percent slopes	0.32	B
SpA	Swanpond silt loam, 0 to 3 percent slopes	0.43	D
Fa	Fairplay silt loam, 0 to 3 percent slopes	0.37	A/D

GRAPHIC SCALE

30 0 15 30 60 120

(IN FEET)
1 inch = 30 ft.

STATE OF MARYLAND
TRAVIS M. FREDRICK
49800
PROFESSIONAL ENGINEER
12/21/2021

Professional Certification:
I hereby certify that these documents were prepared or approved by me, and that I am a duly licensed professional engineer under the laws of the State of MARYLAND License # 49800
Expiration Date: 06-24-2022

FSA
FREDERICK, SEIBERT & ASSOCIATES, INC.
CIVIL ENGINEERS • SURVEYORS • LANDSCAPE ARCHITECTS • LAND PLANNERS
fsa-inc.com
NEW BLOOMFIELD, PA 17068 717-582-2884 FIRST MANOR
CARLISLE, PA 17013 717-249-1011 1430 SOUTH HANOVER STREET
GREENCASTLE, PA 17225 717-597-1407 11 WEST BALTIMORE STREET
HAGERSTOWN, MD 21740 301-739-8866 126 TOWNSHIP CHAC STREET

MARK	DESCRIPTION	DATE
1	REVISED PER PLANNING & ZONING COMMENTS	12/16/21
2	REVISED PER WSSC COMMENTS	12/16/21

NOT APPROVED FOR CONSTRUCTION

ROWLAND ON HOLDINGS, LLC
SITUATE AT THE SOUTH END OF FRENCH LANE
EAST OF GREENCASTLE-PIKE MD ROUTE 63 AND NORTH OF INTERSTATE 70
WASHINGTON COUNTY, MARYLAND
ROWLAND ON HOLDINGS, LLC
14702 INDIAN SPRINGS RD. HANCOCK, MD 21740
(301)-491-0818

PROJECT NO.	6454.REM
DWN BY: DWH	DATE: 09-22-2021
PROJECT MANAGER: ADAM HAGER	EMAIL: ahager@fsa-inc.com
TAX MAP-GRID-PARCEL	0048-0009-0882
SCALE	1" = 30'

SHEET TITLE

EXISTING CONDITIONS

C-101
SHEET 03 OF 08

SP-21-036

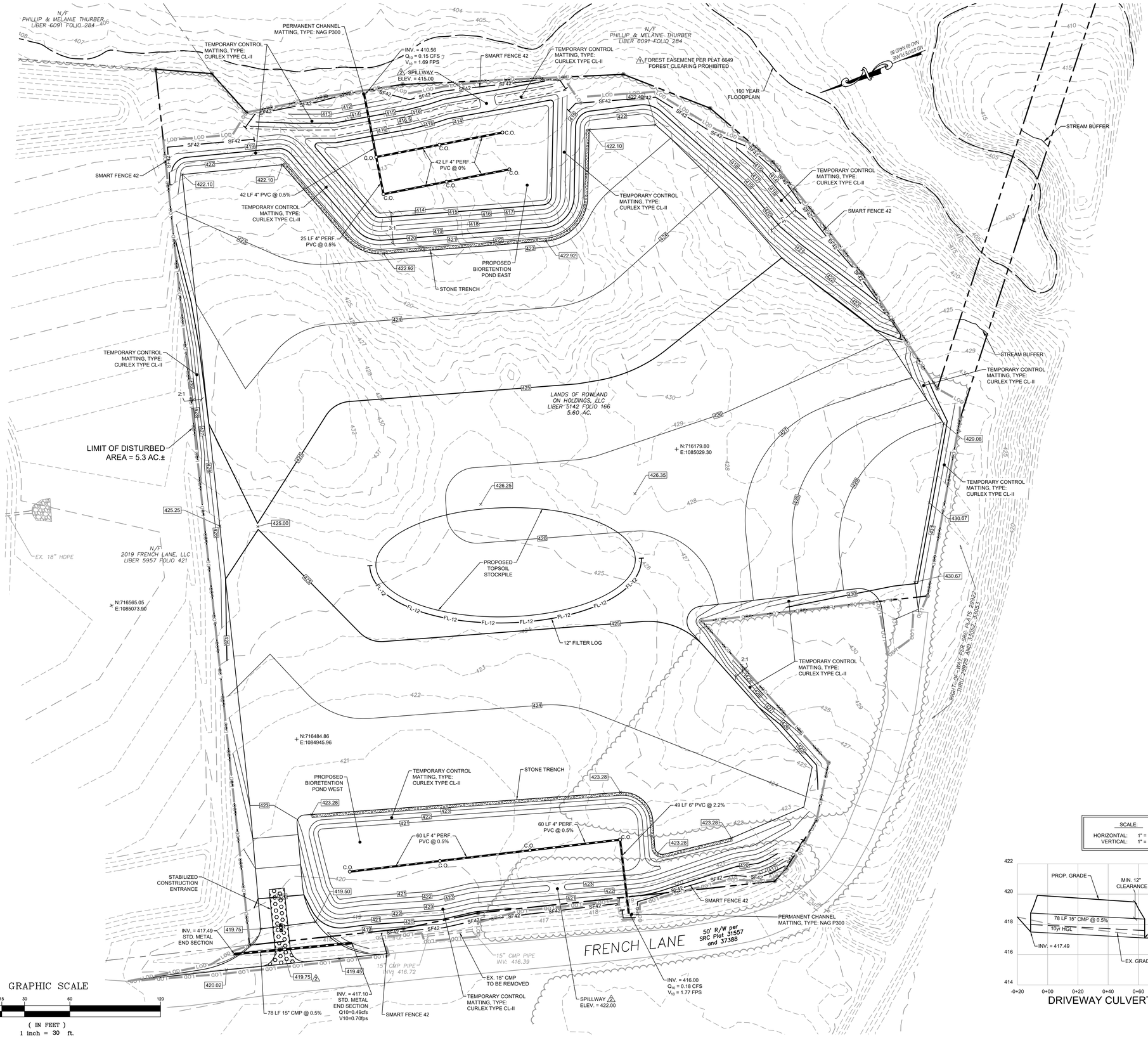

SCALE:
HORIZONTAL: 1" = 30'
VERTICAL: 1" = 3'

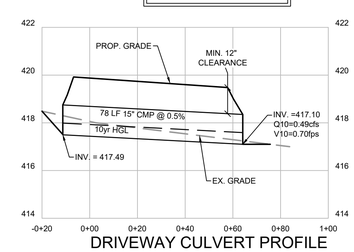

DRIVEWAY CULVERT PROFILE

STATE OF MARYLAND
TREVOR M. FREDERICK
48810
PROFESSIONAL ENGINEER
12/21/2021

Professional Certification:
I hereby certify that these documents were prepared or approved by me, and that I am a duly licensed professional engineer under the laws of the State of MARYLAND License # 48810
Expiration Date: 06-24-2022

FSA
FREDERICK SEIBERT & ASSOCIATES, INC.
CIVIL ENGINEERS • SURVEYORS • LANDSCAPE ARCHITECTS • LAND PLANNERS
fsa-inc.com
1120 TOWNSHIP DRIVE, STREET HAGERSTOWN, MD 21740 (301) 797-4064
1127 WEST ALLEGHENY STREET GREENCASTLE, PA 17225 (717) 261-1457
1400 SOUTH HANOVER STREET CARLISLE, PA 17013 (717) 243-1411
1100 WEST MAIN STREET NEW BLOOMFIELD, PA 17068 (717) 582-2884

MARK	DESCRIPTION	DATE
1	REVISED PER PLANNING & ZONING COMMENTS	12/16/21
2	REVISED PER ENGINEERING COMMENTS	12/17/21

NOT APPROVED FOR CONSTRUCTION

ROWLAND ON HOLDINGS, LLC

SITUATE AT THE SOUTH END OF FRENCH LANE
EAST OF GREENCASTLE PIKE MD ROUTE 68 AND NORTH OF INTERSTATE 70

WASHINGTON COUNTY, MARYLAND

ROWLAND ON HOLDINGS, LLC
14702 INDIAN SPRINGS RD. HANCOCK, MD 21740
(301)-491-0818

PROJECT NO.	6454.REM
DWN BY: DWH	DATE: 09-22-2021
PROJECT MANAGER: ADAM HAGER	EMAIL: ahager@fsa-inc.com
TAX MAP-GRID-PARCEL: 0048-0009-0882	
SCALE: 1" = 30'	

SHEET TITLE

GRADING, EROSION & SEDIMENT CONTROL PLAN

C-102
SHEET 04 OF 08

SP-21-036

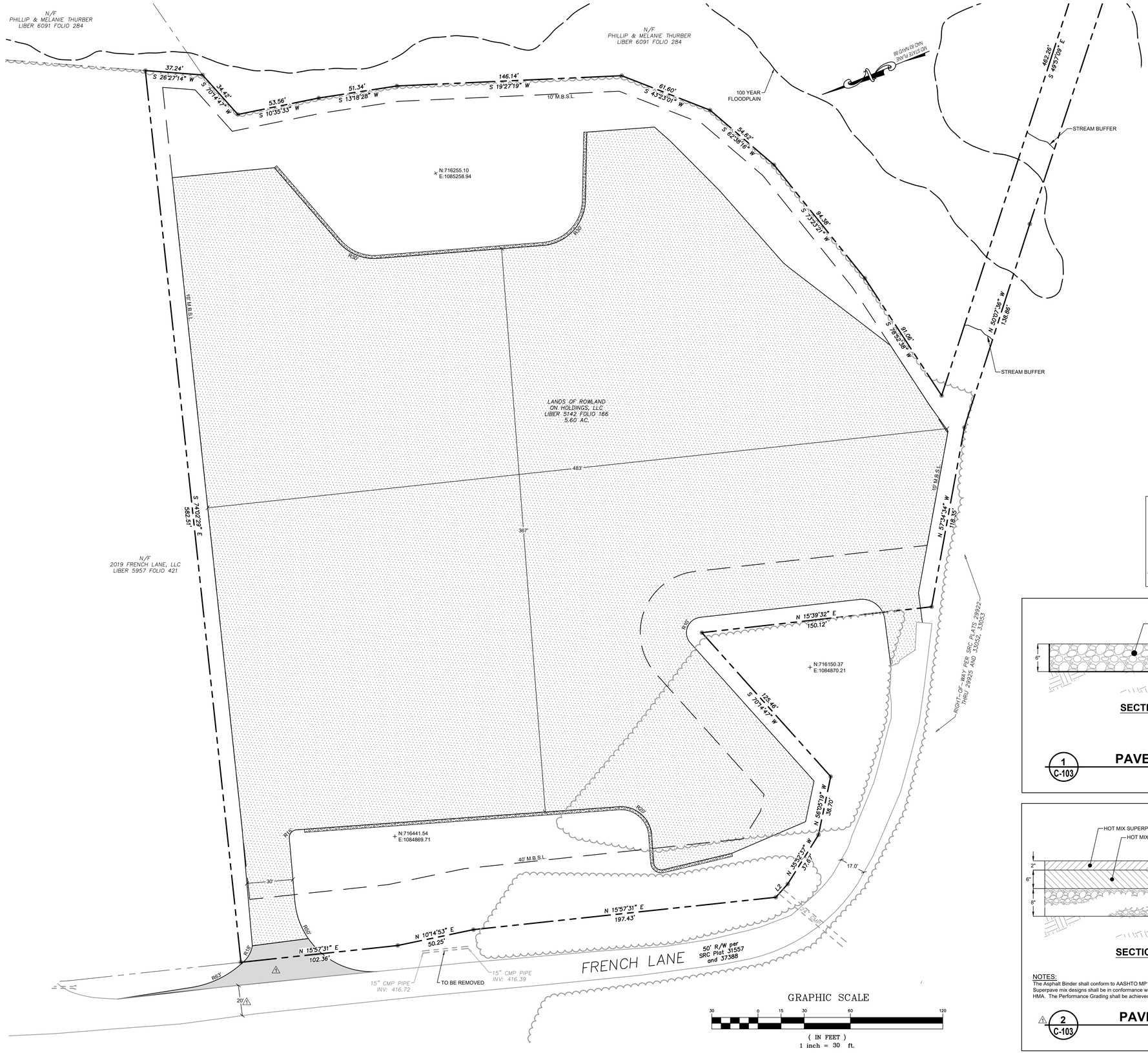

HATCH LEGEND

- PROPOSED GRAVEL
- PROPOSED PAVEMENT

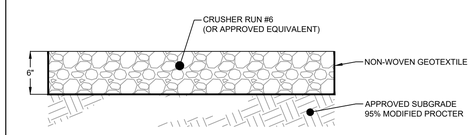

SECTION

1 / C-103 PAVEMENT - GRAVEL

NOT TO SCALE

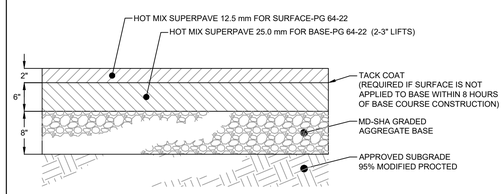

SECTION

NOTES:
The Asphalt Binder shall conform to AASHTO MP1-93 Table 1, Standard Specification for Performance Graded Asphalt Binder. Superpave mix designs shall be in conformance with AASHTO PP28-95, Standard Practice for Superpave Volumetric Design for HMA. The Performance Grading shall be achieved by the use of Neat Asphalt with polymer modification when needed.

2 / C-103 PAVEMENT - TRUCK

NOT TO SCALE

STATE OF MARYLAND
TREVOR M. FREDERICK
49800
PROFESSIONAL ENGINEER
12/21/2021

Professional Certification:
I hereby certify that these documents were prepared or approved by me, and that I am a duly licensed professional under the laws of the State of MARYLAND License # 49800
Expiration Date 06-24-2022

FSA
FREDERICK SEIBERT & ASSOCIATES, INC
CIVIL ENGINEERS • SURVEYORS • LANDSCAPE ARCHITECTS • LAND PLANNERS
fsa-inc.com
126 TOWNSHIP/CHAC STREET HAGERSTOWN, MD 21740 301-739-8866
WEST MAIN STREET GREENCASTLE, PA 17225 717-597-1837
MAIN SQUARE/CHURCH STREET CARLISLE, PA 17013 717-249-1411
EAST MAIN STREET NEW BLOOMFIELD, PA 17068 717-582-2161

MARK	DESCRIPTION	DATE
1	REVISED PER ENGINEERING COMMENTS	12/17/21

NOT APPROVED FOR CONSTRUCTION

ROWLAND ON HOLDINGS, LLC
SITUATE AT THE SOUTH END OF FRENCH LANE
EAST OF GREENCASTLE PIKE MD ROUTE 63 AND NORTH OF INTERSTATE 70
WASHINGTON COUNTY, MARYLAND
ROWLAND ON HOLDINGS, LLC
14702 INDIAN SPRINGS RD. HANCOCK, MD 21740
(301) 491-0818

PROJECT NO.	6454.REM
DWN BY: DWH	DATE: 09-22-2021
PROJECT MANAGER: ADAM HAGER	EMAIL: ahager@fsa-inc.com
TAX MAP-GRID-PARCEL: 0048-0009-0882	
SCALE: 1" = 30'	

SHEET TITLE

SITE AND DIMENSION PLAN

C-103
SHEET 05 OF 08

SP-21-036

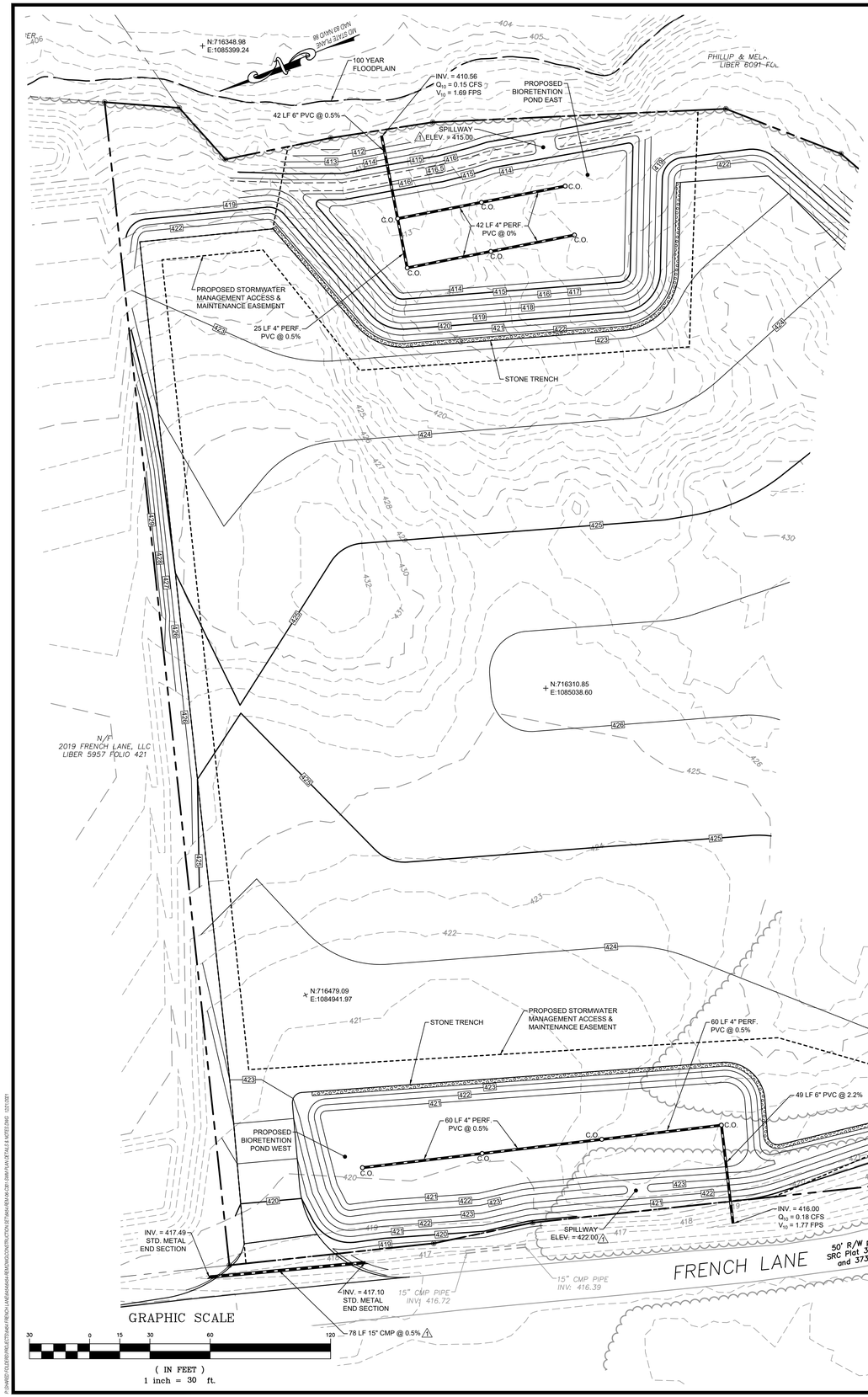

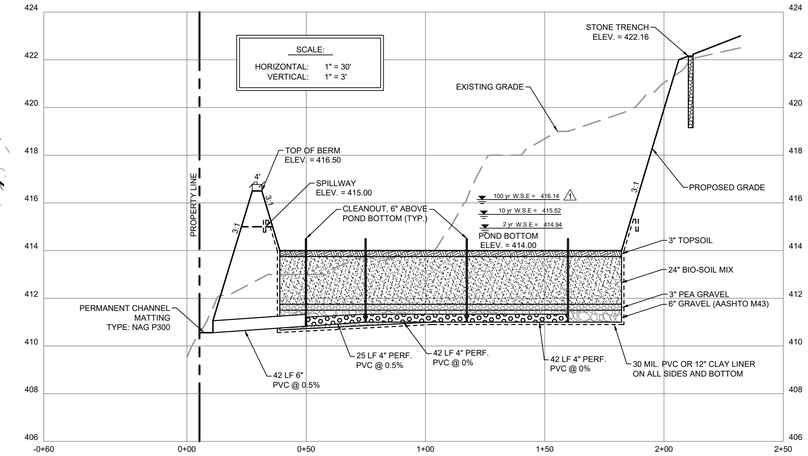

BIORETENTION POND EAST PROFILE

REQUIRED PRETREATMENT VOLUME=3,434CF
PROVIDED PRETREATMENT VOLUME=3,514CF
(600LF x 3.66' x 4' x 0.4pourosity)

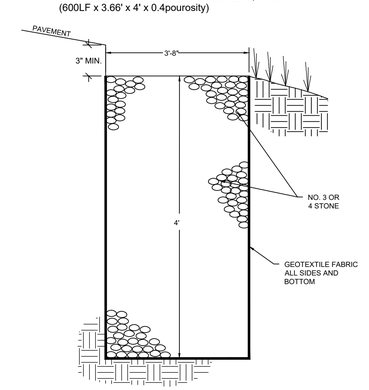

1 C-301 STONE TRENCH

NOT TO SCALE

Notice of Required Stormwater Management Inspections
Sand Filters, Bioretention and Rain Garden Facilities

The following inspections are required to be performed by the Qualified Professional for the construction of any Sand Filter, Bioretention or Rain Garden Facility. Additional inspections may be needed based on professional engineering judgment. Each inspection is required at the start of each stage.

Inspection Item		Bio #1	Bio #2
Excavation of Facility - Prior to excavation, verify sediment and erosion control features are in place to prevent sediment inflow. Verify all flagging required in the area for sensitive area protection. Verify grading is accurately staked-out and re-staked as needed. Facility dimensions shall be verified and soils checked for infiltration. Verify contributing area is permanently stabilized. Verify that water is not present. Ensure roughening of side walls if sheared and sealed by heavy equipment. Verify that compaction of facility base is minimized.	**Certifying Engineer**		
	Date		
	County Inspector		
	Date		
Placement of Filter Cloth (Trenches) - Ensure filter fabric is overlapping six (6) inches between strips of cloth. Ensure tree roots or other obstacles are removed from facility walls or sides and base to prevent tearing. Verify that uphill fabric roll overlaps two (2) feet over downhill roll.	**Certifying Engineer**		
	Date		
	County Inspector		
	Date		
Placement of Underdrains and Observation Wells - Location, size and material of under drain and observation wells shall be verified prior to stone placement. Verify pipe ends capped. Verify 3" gravel cover	**Certifying Engineer**		
	Date		
	County Inspector		
	Date		
Placement of Filtering Media - Verify bottom layer material and thickness. Verify sand and/or filter media layer material and thickness. Verify filter fabric or pea gravel used between sand layers. Verify top filter media layer.	**Certifying Engineer**		
	Date		
	County Inspector		
	Date		
Placement of Sand Filter Layer or Gravel Diaphragm - Verify depth and width of sand and/or diaphragm layer. Verify fill material.	**Certifying Engineer**		
	Date		
	County Inspector		
	Date		
Stabilization and Landscaping - Verify site top soiled, seeded and mulched. Verify embankment top soiled and seeded. Verify location, size, type and number of planted landscape material. Verify no more than 1/8 inch root ball exposed. Verify planting stock kept moist during on-site storage. Verify installation location, size, material type of fencing or other safety barriers.	**Certifying Engineer**		
	Date		
	County Inspector		
	Date		
The Qualified Professional may request the presence of a County Construction Standards Inspector at least 24 hours in advance by calling 240-313-2400.			

NOTE: IF ROCK IS ENCOUNTERED, UNDERCUT POND 18" AND BACKFILL WITH CL TYPE SOIL.

BIO-RETENTION STRUCTURE TABLE

BIO #	AREA	FINISH GRADE	PONDING DEPTH	STONE BOTTOM	C/O	TOP BERM	2 YR. WSE	10 YR. WSE
WEST	9,237 S.F.	421.00	1.0'	418.00	421.50	423.00	421.30	422.13
EAST	6,942 S.F.	414.00	1.0'	532.00	414.50	416.00	414.94	415.52

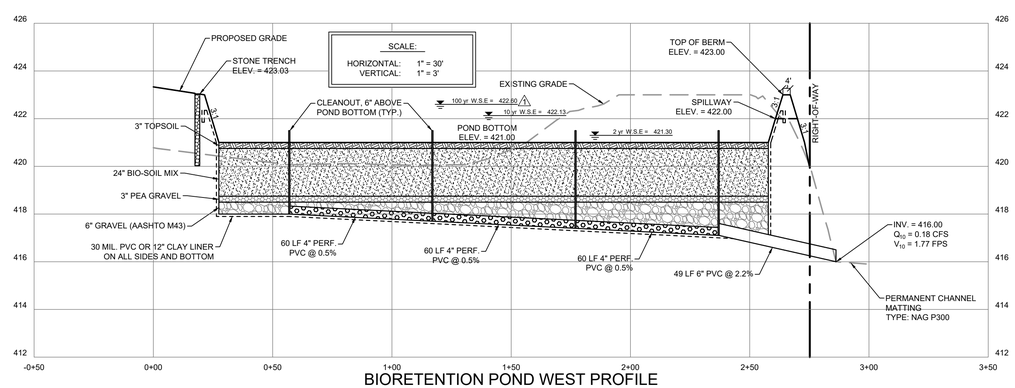

BIORETENTION POND WEST PROFILE

STATE OF MARYLAND
TREVOR M. FREDERICK
49800
PROFESSIONAL ENGINEER
12/21/2021

Professional Certification:
I hereby certify that these documents were prepared or approved by me, and that I am a duly licensed professional engineer under the laws of the State of MARYLAND License # 49800
Expiration Date 06-24-2022

FSA
FREDERICK, SEIBERT & ASSOCIATES, INC.
CIVIL ENGINEERS • SURVEYORS • LANDSCAPE ARCHITECTS • LAND PLANNERS
WWW.FSA-INC.COM
1 EAST MAIN STREET NEW BLOOMFIELD, PA 17068 717-582-2161
1400 SOUTH HANOVER STREET CARLISLE, PA 17013 717-249-1411
10 WEST STRAWBERRY STREET GREENCASTLE, PA 17225 717-597-1407
126 TECHNICOM DRIVE HAGERSTOWN, MD 21740 301-739-8866

MARK	DESCRIPTION	DATE
1	REVISED PER ENGINEERING COMMENTS	12/17/21

NOT APPROVED FOR CONSTRUCTION

ROWLAND ON HOLDINGS, LLC
STUART AT THE SOUTH END OF FRENCH LANE
EAST OF GREENCASTLE PIKE MD ROUTE 58 AND NORTH OF INTERSTATE 70
WASHINGTON COUNTY, MARYLAND
ROWLAND ON HOLDINGS, LLC
14702 INDIAN SPRINGS RD. HANCOCK, MD 21740
(301) -491-0818

PROJECT NO.	6454.REM
DWN BY: DWH	DATE: 09-22-2021
PROJECT MANAGER: ADAM HAGER	EMAIL: ahager@fsa-inc.com
TAX MAP-GRID-PARCEL: 0048-0009-0882	
SCALE: 1" = 30'	

SHEET TITLE

STORMWATER MANAGEMENT PLAN

C-301
SHEET 06 OF 08

SP-21-036

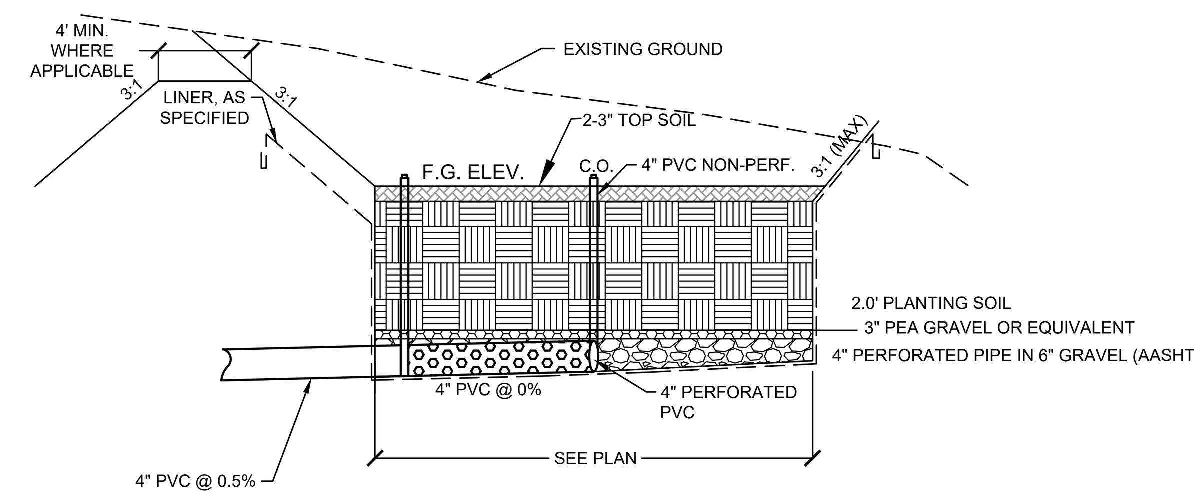

INCREASE DEPTH OF STONE FOR UNDERDRAIN SLOPE, AS APPLICABLE
MAINTAIN MINIMUM OF 2" STONE OVER UNDERDRAIN

1 (C-302) BIORETENTION POND

NOT TO SCALE

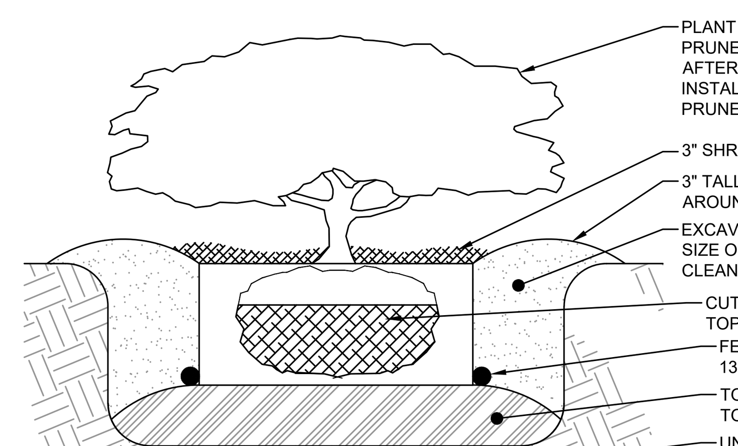

SECTION

3 (C-502) BALLED & BURLAPPED PLANTING - SHRUB

NOT TO SCALE

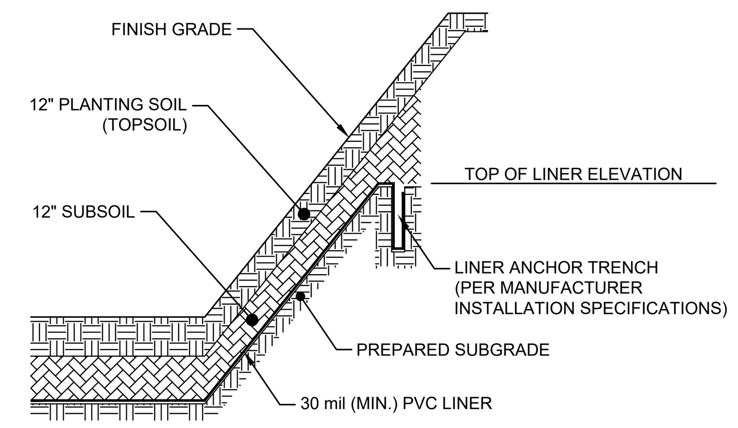

2 (C-302) LINER ANCHOR TRENCH

NOT TO SCALE

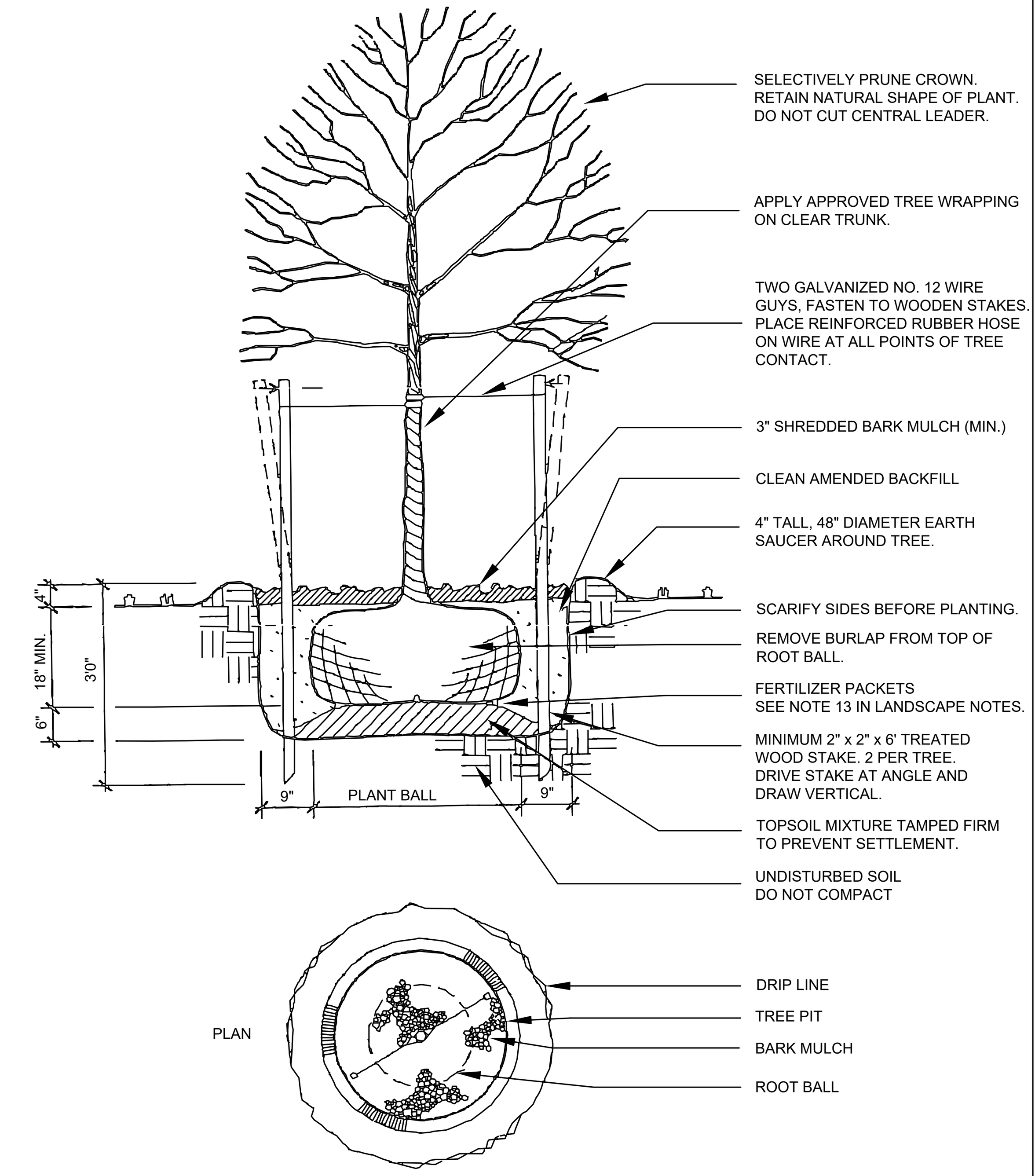

4 (C-502) SMALL TREE PLANTING (UP TO 2-1/2" CAL.)

NOT TO SCALE

OPERATION AND MAINTENANCE PLAN BIORETENTION		
INSPECTION ITEM	**INSPECTION REQUIREMENTS**	**REMEDIAL ACTION**
Maintenance Access		
General	Check for accessibility to facility; excessive vegetation; surface stability	Repair erosion and maintain access surface in good condition
Pretreatment		
Grass filter strip or sand layer	Check for sediment accumulation	Remove sediment as needed
Optional sand layer	Check sand for staining and sediment accumulation	If contaminated, replace first three inches of sand layer
Gravel diaphragm	Check for sediment accumulation and evidence of erosion	Remove sediment and replace gravel as needed
Mulch layer	Check for a 2-3 inch mulch layer	Remove mulch and replace as needed
Filter Bed		
Dewatering	Check for dewatering within 48 hours of rainfall; noticeable odors; water stains on the filter surface or at the outlet; presence of algae or aquatic vegetation	Remove mulch and the top 3-6 inches of soil/sediment and replace with suitable materials per plan specifications; follow up inspections shall confirm adequate dewatering; contact the plan approval authority if the facility does not function as intended
Sediment	Check for sediment accumulation	Remove sediment as needed
Mulch layer	Check for adequate cover; sediment accumulation; discoloration	Remove and replace mulch and excess sediment as needed
Vegetation		
Plant composition and health	Check for plant composition according to approved plans; invasive species, weeds, and dead or dying vegetation	Remove and replace plants as necessary
Vegetative cover/erosion	Check for erosion, runoff channelizing, or bare spots	Repair/grade and stabilize as needed
Outlets		
Underdrain system	Check outlet end to ensure that discharge is not obstructed; check for erosion	Remove any flow obstructions; grade and stabilize any eroded areas to provide stable conveyance
Overflow spillway	Check for displacement of rip-rap, stable conveyance, and erosion below the outlet	Repair and replace as needed
Conveyance Systems		
General	Check for erosion, flow blockages or bypass, and stable conveyance	Repair/replace and stabilize as needed
Flow diversion	Check flow splitter for proper functioning	Repair as necessary
Trash and Debris		
	Check for trash and debris accumulation	Trash and debris shall be disposed of in an acceptable manner
Structural Components		
	Check for structural deterioration, spalling or cracking	Repair according to specifications on the approved plans

Field conditions may require a modification to the original approval in order to achieve the intended design function. The plan approval authority should be contacted for review and approval of all proposed modifications. Inspection and maintenance should occur after any major rain event (e.g., meeting or exceeding the design rainfall depth for the facility).

Table B-4.1 Material Specifications for Micro-Bioretention, Rain Gardens & Landscape Infiltration

Material	Specification	Size	Notes
Plantings	see planting list	n/a	plantings are site-specific
Planting Soil [2' to 4' deep]	loamy sand (60 - 65%) & compost (35 - 40%) or sandy loam (30%), coarse sand (30%) & compost (40%)	n/a	USDA soil types loamy sand or sandy loam; clay content < 5%
Organic content	Min. 10% by dry weight (ASTM D 2974)		
Mulch	shredded hardwood	n/a	aged 6 months, minimum; no pine or wood chips
Pea gravel diaphragm	pea gravel: ASTM-D-448	No. 8 or No. 9 (1/8" to 3/8")	
Curtain drain	ornamental stone: washed cobbles	stone: 2" to 5"	
Geotextile		n/a	PE Type 1 nonwoven
Gravel (underdrains and infiltration berms)	AASHTO M-43	NO. 57 OR NO. 6 AGGREGATE (3/8" to 3/4")	
Underdrain piping	F 758, Type PS 28 or AASHTO M-278	4"-6" rigid sch. 40 PVC or SDR35	Slotted or perforated pipe; 3/8" perf. @ 6" o/c, 4 holes/row; min. 3" of gravel over pipes; not necessary underneath pipes. Perforated pipe shall be wrapped with 1/4 inch galvanized hardware cloth
Poured in place concrete (if required)	MSHA Mix No. 3; f'c = 3500 psi @ 28 days, normal weight, air-entrained; reinforcing to meet ASTM-615-60	n/a	on-site testing of poured-in-place concrete required: 28 day strength and slump test; all concrete design (cast-in-place or pre-cast) *not using previously approved State or local standards* requires design drawings sealed and approved by a professional engineer licensed in the State of Maryland - design to include meeting ACI Code 350.R/89; vertical loading [H-10 or H-20]; allowable horizontal loading (based on soil pressures); and analysis of potential cracking
Sand	AASHTO M-6 or ASTM C-33	0.02" to 0.04"	Sand substitution such as Diabase and Graystone (AASHTO) #10 are not acceptable. No calcium carbonated or dolomitic sand substitutions are acceptable. No "rock dust" can be used for sand.
Compost	MSHA Standard Specifications for Construction and Materials, July 2008 920.02.05 Compost	Uniform particle size of 0.5" or less	Source - Separated Compost (Type B). Type B Compost shall be tree leaf compost or non-tree leaf compost. Type B Compost produced from lawn clippings shall be tested for contaminants in conformance with Maryland law and regulations.

P:\SHARED FOLDERS\PROJECTS\6454 FRENCH LANE\6454\6454-REM\DWG\CONSTRUCTION SET\6454-REM-06-C301-SWM PLAN DETAILS & NOTES.DWG 12/21/2021

SEED MIX DETAILS
ERNX-127 RETENTION BASIN WILDLIFE MIX
30 % Fox Sedge, PA Ecotype (Carex vulpinoidea, PA Ecotype)
22% Deertongue, 'Tioga' (Panicum clandestinum)
20% Virginia Wildrye, PA Ecotype (Elymus virginicus)
10.3% Lurid (Shallow) Sedge, PA Ecotype (Carex lurida)
4% Autumn Bentgrass, PA Ecotype (Agrostis perennans)
4% Blue Vervain, PA Ecotype (Verbena hastata)
3% Soft Rush (Juncus effusus)
3% Green Bulrush, PA Ecotype (Scirpus atrovirens)
2% Hop Sedge, PA Ecotype (Carex Lupulina)
1% Woolgrass, PA Ecotype (Scirpus cyperinus)
0.3% Flat Topped White Aster, PA Ecotype (Aster Umbellatus)
0.3% Square Stemmed Monkeyflower, PA Ecotype (Mimulus ringens)
0.1% Swamp Milkweed, PA Ecotype (Asclepias incarnata)

STORMWATER MANAGEMENT SEED MIX NOTES

SITE PREPARATION

Invasive species, particularly those that will adapt to wet conditions, should be removed or sprayed before they become incorporated into the site. Spot spray or hand pull problem weeds. Perennial weeds not addressed before establishment will be difficult to remove later.

SEEDING AND PLANTING METHODS

Seeding and planting should begin immediately upon completion of the structure while the soil is still friable and before invasive weeds emerge. Plan seeding and planting before the basin is flooded or allow the basin to drain to a few inches before seeding. Broadcast seed evenly over each unit by hand seeding or hydroseeding. The use of native species can provide temporary vegetation to protect the soil in SWM facilities until permanent vegetation can become established. Straw mulch, or straw coconut mats are frequently used to control erosion and protect emerging seedlings from extreme temperatures and drying out. Mulch should be sparse in order to allow sunlight to reach the ground. Irrigating seeded areas is beneficial until seedlings become established.

FIRST GROWING SEASON MAINTENANCE

Whenever canopy (overall vegetation) reaches a height of 18"-24", use a string trimmer to trim the meadow to a height of 8". This will reduce competition by fast-growing weeds for sunlight, water and nutrients needed by slower growing, perennial natives. Mowing should not be done with a lawn mower as the mower height will be too low and native seedlings will be killed. Mowing should cease by mid-September.

SECOND AND SUBSEQUENT GROWING SEASON MAINTENANCE

Prior to new spring growth reaching a height of 2" trim any material standing from the previous year close to the ground (approximately 2"). This will allow the soil to warm more quickly which will stimulate emergence and growth of native seedlings.

SPECIAL CIRCUMSTANCES SECOND GROWING SEASON

If you notice a heavy infestation of ragweed or foxtail in the second growing season, trim the meadow to a height of 8". Trimming should cease after mid-September.

GENERAL LANDSCAPE NOTES:

1. Landscape contractor is to call Miss Utility and have all underground utilities marked prior to any digging or planting.
2. Landscape Contractor shall install all plant material in a timely fashion.
3. Landscape Contractor shall be responsible for all watering, weeding, repairs and replacements prior to final acceptance.
4. NO Substitutions of plant material without written permission of FSA. Planting plans have been proposed with plant sizes, types, and locations as important design elements.
5. Plants shall be in accordance with the current issue of American Standards for Nursery Stock published by the American Association of Nurserymen.
6. All plants shall be watered thoroughly during installation and prior to final acceptance.
7. All bark mulched areas shall be first covered with Typar Weed Barrier or approved equal.
8. All planting bed areas on the site shall be mulched with a hardwood bark mulch at a depth of approx. 3", unless noted otherwise.
9. Plant material shall be inspected yearly in order to remove and replace dead, diseased vegetation.
10. Warranted plant material that is 25% dead or more shall be considered dead and shall be replaced at no charge.
11. All plant material shall be warranted for two years. 60 days prior to the end of the warranted period, the Engineering Department shall perform an inspection. Of which there should be an 90% survival rate of all plant material. All surviving plant material shall be found in a healthy condition. The warranty shall commune on the date of initial acceptance by the owner.
12. The landscape contractor shall conduct a final inspection with the owner or owner's representative at the end of the warranty period.
13. Fertilizer Packets are to be Nutri-Pak 16-8-8 or approved equal per manufacturer's recommendations.
14. Landscape is recommended to be installed during the two growing seasons. Spring: April 15-June 15, Fall: September 1-November 1.

MAINTENANCE:

1. Owner to remove silt/sediment if the accumulation of sediment exceeds one inch over the biorentention area.
2. All trash and debris should be removed from the top of the bioretention area as necessary.
3. Areas devoid of mulch shall be re-mulched on an annual basis.

Pond MD-378
NRCS - MARYLAND JANUARY 2000
CONSTRUCTION SPECIFICATIONS

Earth Fill

Material - The fill material shall be taken from approved designated borrow areas. It shall be free of roots, stumps, wood, rubbish, stones greater than 6", frozen or other objectionable materials. Fill material for the center of the embankment, and cut off trench shall conform to Unified Soil Classification GC, SC, CH, or CL and must have at least 30% passing the #200 sieve. Consideration may be given to the use of other materials in the embankment if designed by a geotechnical engineer. Such special designs must have construction supervised by a geotechnical engineer. Materials used in the outer shell of the embankment must have the capability to support vegetation of the quality required to prevent erosion of the embankment.

Placement - Areas on which fill is to be placed shall be scarified prior to placement of fill. Fill materials shall be placed in maximum 8 inch thick (before compaction) layers which are to be continuous over the entire length of the fill. The most permeable borrow material shall be placed in the downstream portions of the embankment. The principal spillway must be installed concurrently with fill placement and not excavated into the embankment.

Compaction - The movement of the hauling and spreading equipment over the fill shall be controlled so that the entire surface of each lift shall be traversed by not less than one tread track of heavy equipment or compaction shall be achieved by a minimum of four complete passes of a sheepsfoot, rubber tired or vibratory roller. Fill material shall contain sufficient moisture such that the required degree of compaction will be obtained with the equipment used. The fill material shall contain sufficient moisture so that if formed into a ball it will not crumble, yet not be so wet that water can be squeezed out. When required by the reviewing agency the minimum required density shall not be less than 95% of maximum dry density with a moisture content within ±2% of the optimum. Each layer of fill shall be compacted as necessary to obtain that density, and is to be certified by the Engineer at the time of construction. All compaction is to be determined by AASHTO Method T-99 (Standard Proctor).

Cut Off Trench - The cutoff trench shall be excavated into impervious material along or parallel to the centerline of the embankment as shown on the plans. The bottom width of the trench shall be governed by the equipment used for excavation, with the minimum width being four feet. The depth shall be at least four feet below existing grade or as shown on the plans. The side slopes of the trench shall be 1 to 1 or flatter. The backfill shall be compacted with construction equipment, rollers, or hand tampers to assure maximum density and minimum permeability.

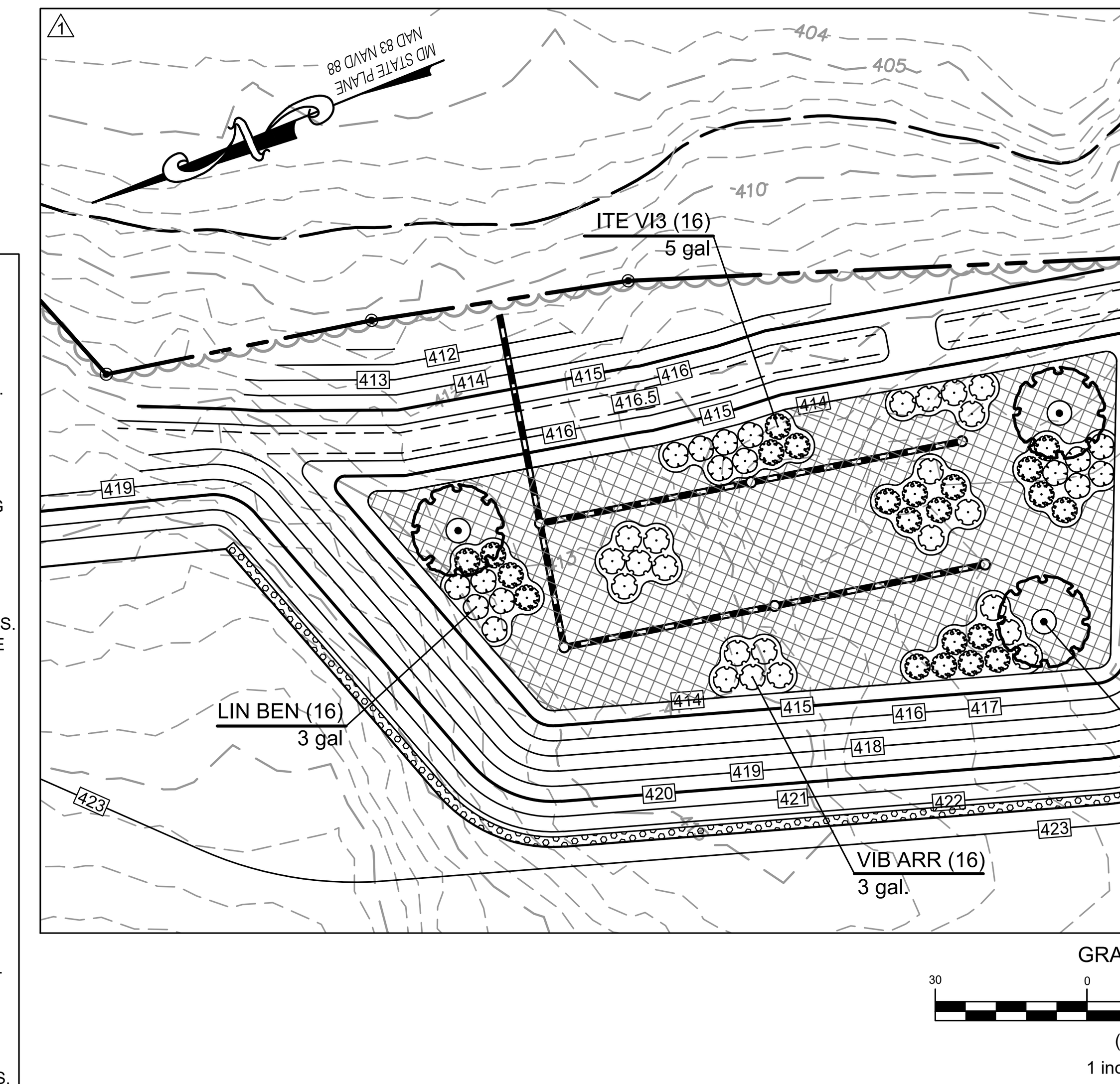

PLANT SCHEDULE

TREES	CODE	BOTANICAL NAME	COMMON NAME	SIZE	QTY	DETAIL
	BET RIV	Betula nigra	River Birch	2" Cal.	8	9/C-502
SHRUBS	**CODE**	**BOTANICAL NAME**	**COMMON NAME**	**SIZE**	**QTY**	**DETAIL**
	ITE VI3	Itea virginica `Virginia`	Virginia Sweetspire	5 gal	38	8/C-502
	LIN BEN	Lindera benzoin	Spicebush	3 gal	38	8/C-502
	VIB ARR	Viburnum dentatum	Viburnum	3 gal	38	8/C-502

SEED MIX LEGEND			
BMP PRACTICE	SIZE	SEEDING RATE	REMARKS
BIO-RETENTION WEST	9,237 S.F.	20 POUNDS / ACRE OR 1/2 POUND / 1,000 SF	SEE NOTES FOR SWM SEED PREPARATION AND ESTABLISHMENT.
BIO-RETENTION EAST	6,942 S.F.	20 POUNDS / ACRE OR 1/2 POUND / 1,000 S.F.	SEE NOTES FOR SWM SEED PREPARATION AND ESTABLISHMENT.

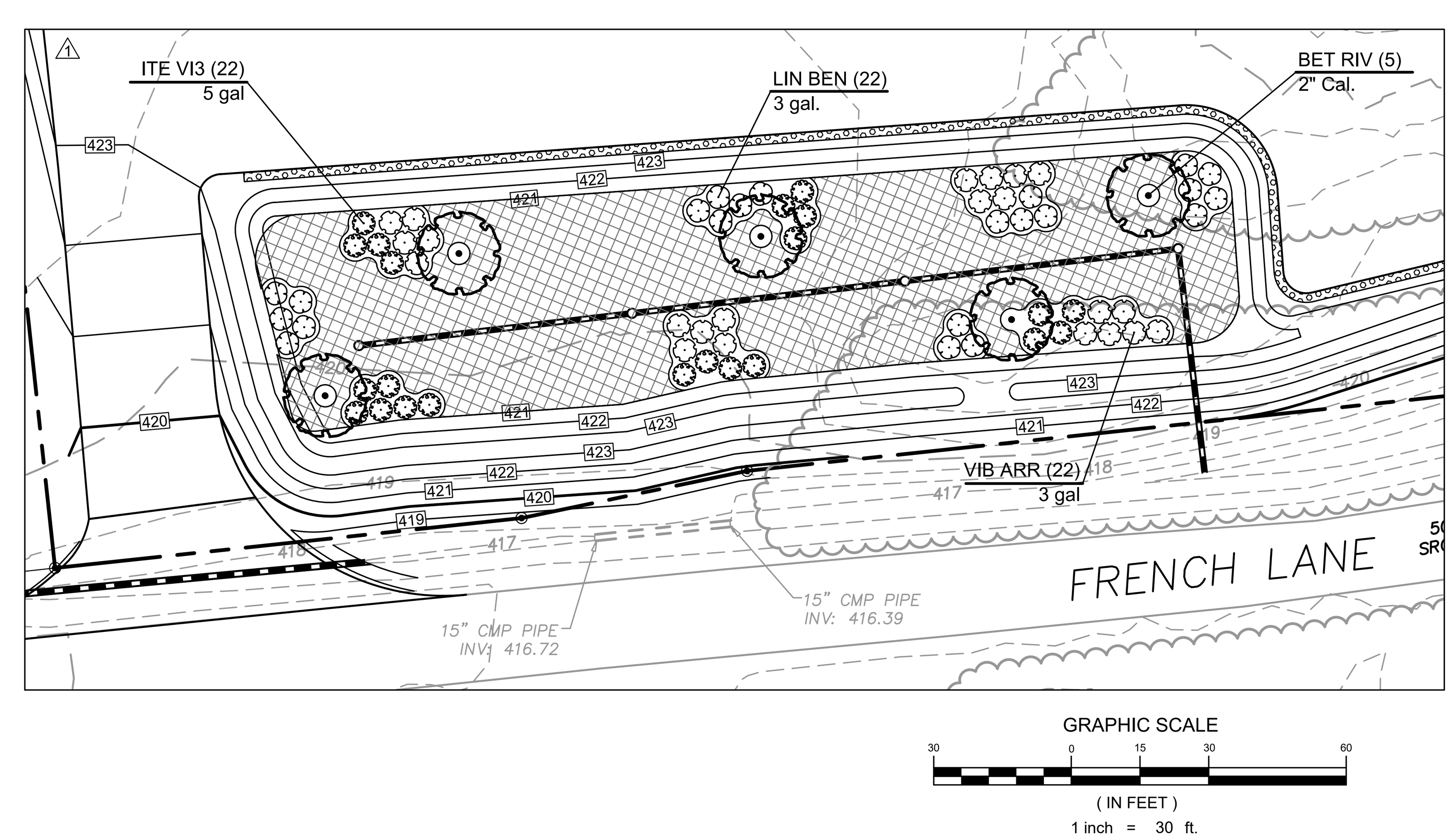

CATEGORY 300 DRAINAGE PVC LINED PONDS

DESCRIPTION. Furnish, place, and anchor a 30-mil PVC liner along designated ditch or swale areas, and in SWM facilities as shown and as directed.

MATERIALS.

Furnished Topsoil	920.01.02
Furnished Subsoil	920.01.04
Type B Soil Stabilization Matting	920.05.01
Staples	920.05.02
Select Borrow	916.01
PVC Liner Material	As below

The minimum physical properties for the PVC liner are as follows:

PROPERTY	TEST METHOD	REQUIREMENT
Thickness	D 1599	+/- 5%
Specific Gravity (min.)	D 792	1.20
100% Modulus (psi. min.) (1 b. force/in. width, min.)	D 882	100 30
Tensile (psi, min.) (Lb. force/ in. width, min.)	D 882	2300 73
Elongation at Break (%, min.)	D 882	380
Graves Tear (lb./in., min.) (1b. force/in. width, min.)	D 1004	325 8
Resistance to Soil Burial (% change max.) (a) Breaking Factor (b) Elongation At Break (c) Modulus at 100% Elongation	G 160	 5 20 20
Impact Cold Crack (/F)	D 1790	-20
Dimensional Stability (% change/max.)	D 120 (212/f/15 min.)	3
Water Extraction (%, max.)	D 1239	0.3
Volatile Loss (%, max.)	D 1203	0.70
Hydrostatic Resistance (psi,min.)	D 751	100

PVC LINER CERTIFICATION.

Submit certification per TC 1.03 that the PVC liner material conforms to the physical properties. Include the following:

(a) Polymer and composition of the PVC Liner, including additive composition of any coating materials

(b) Manufacturer's Quality Control plan including properties, test methods, frequency of testing, tolerances and method of resolution for out-of-specification material.

(c) Laboratory test results documenting the physical properties.

STORAGE AND HANDLING.
Store the PVC liner in a dry area in its original container. Protect the liner from puncture, dirt, grease, water, mud, mechanical abrasions, or other damage. Document any damage to the PVC liner. Remove and replaced damaged PVC liners that cannot be repaired to comply with the specification at no additional cost.

CONSTRUCTION.
Construct PVC Lined Ditches in conformance with the details as shown, as directed, and as follows:

SUBGRADE PREPARATION.
Ensure subgrades to be lined are smooth and free of rocks, stones, sticks, sharp objects, or other debris. Prepare the subgrade to provide a firm, unyielding foundation for the liner; with no sudden or abrupt changes or break in grade. Completely remove standing water, mud, snow, or excess moisture prior to placement. Do not place the liner on frozen subgrade; or on subgrade that has been softened by water or overly dried until it has been properly reconditioned and compacted.

Take special care in maintaining the prepared soil surfaces. The soil surface will be monitored daily to evaluate the surface condition. Repair any damage to the surface caused by weather conditions, as directed.

ANCHOR TRENCH.
Excavate the anchor trench to the line, grade, and width shown.

(a) Excavate the anchor trench to a minimum of 1.5 ft wide and 2.5 ft high.

(b) Excavate trench located in clay susceptible to desiccation to no more than the amount of trench required for anchoring the liner in one day.

(c) Provide slightly rounded corners in the trench to avoid introducing sharp bends in the liner. Ensure the leading edges of the trench are smooth and even.

LINER PLACEMENT.

(a) Place the liner down gradient (upstream to downstream) to facilitate overlapping and prevent run-off from entering under the placed liner.

(b) Use methods to place the liner panels that avoid excessive wrinkling (especially differential wrinkles between adjacent panels). Minimum wrinkling is allowed to insure the liner is installed in a relaxed condition. Stretching the liner is not allowed.

(c) Panels may be repositioned after placement to conform to the overlap requirements. Use repositioning methods that prevent dragging or elongating the panels.

(d) Provide a seam overlap of a minimum of 3 ft. and a maximum of 4 ft.

(e) Place adequate ballast (e.g., cover soil, or similar measures that will not damage the liner) on the liner to prevent uplift by wind. Continuous loading is recommended along the edges of panels (if high winds are anticipated) to prevent wind flow under the panels.

(f) Only equipment necessary for installation and testing of the liner is permitted to come in contact with the liner. Use rubber-tired equipment with a ground pressure not exceeding 5 psi; and a total weight not exceeding 750 lb.

WEATHER CONDITIONS.
Proceed with liner placement when the ambient temperature and material sheet temperature are between 60 and 105 F. Measure the sheet temperature of the liner surface with an infrared thermometer or a surface thermometer.

(a) Do not place the liner during periods of precipitation, in the presence of excessive moisture (i.e., fog, dew, mud), or during excessive winds, as determined.

(b) Provide a means of storing the liner in an area that maintains the liner temperature above 60 F, if liner placement is required at ambient temperatures below 60 F.

UNPACKING THE LINER.
Notify the Engineer to witness the liner unpacking. Mark liners that are damaged or have suspect areas for testing and/or repair. Replace liners that are damaged when unpacked and that cannot be adequately repaired at no additional cost.

BACKFILLING THE ANCHOR TRENCH.
Backfill the anchor trench and compact as directed. Place backfill in 8 in. thick loose lifts and compact by wheel rolling with light, rubber_tired or other light compaction equipment.

Take care to prevent damage to the liner while backfilling the trench. Construction equipment is not allowed to come into direct contact with the liner at any time. Repair any damage to the liner that occurs while backfilling at no additional cost.

BACKFILLING THE PVC LINER.
Cover the liner with a 1 foot layer of soil. Use soil conforming to 920.01.04 as backfill for the first 8 inches. Use soil conforming to 920.01.02 as backfill for the top 4 inches. Tamp the backfill in place as directed. Place Type B Soil Stabilization Matting conforming to 920.05 over the topsoil in conjunction with permanent vegetation, as specified.

Do not allow heavy construction equipment to come into contact with the liner or to traverse the trench until adequately backfilled. Repair equipment damage as directed and at no additional cost.

MEASUREMENT AND PAYMENT.
PVC Ditch Liner will be measured and paid for at the Contract unit price per square yard. Payment will be full compensation for the PVC liner, backfill, furnished subsoil and topsoil, and for all other material, labor, equipment, tools and incidentals necessary to complete the work.

(a) Type B Soil Stabilization Matting and Turfgrass Establishment will be measured and paid for at the Contract unit price per square yard.

(b) PVC liner overlap shall not be measured and paid for as a separate item. PVC liner overlap shall be incidental to the cost of PVC liner installation.

(c) Excavation will be measured and paid for at the Contract unit price per cubic yard for Class 2 Excavation.

STATE OF MARYLAND
TREVOR M. FREDERICK
49808
PROFESSIONAL ENGINEER
12/21/2021

Professional Certification:
I hereby certify that these documents were prepared or approved by me, and that I am a duly licensed professional under the laws of the State of: MARYLAND, License # 49808, Expiration Date 08-24-2022.

FSA
FREDERICK, SEIBERT & ASSOCIATES, INC. ©2021
CIVIL ENGINEERS • SURVEYORS • LANDSCAPE ARCHITECTS • LAND PLANNERS
fsa-inc.com
128 SOUTH POTOMAC STREET HAGERSTOWN, MD 21740 301.791.3650
20 WEST BALTIMORE STREET GREENCASTLE, PA 17225 717.597.1007
505 SOUTH HANOVER STREET CARLISLE, PA 17013 717.701.8111
15 EAST MAIN STREET NEW BLOOMFIELD, PA 17068 717.275.7531

MARK:	DESCRIPTION:	DATE:
1	REVISED PER ENGINEERING COMMENTS	12/17/21

ROWLAND ON HOLDINGS, LLC
SITUATE AT THE SOUTH END OF FRENCH LANE
EAST OF GREENCASTLE PIKE MD ROUTE 63 AND NORTH OF INTERSTATE 70
WASHINGTON COUNTY, MARYLAND

ROWLAND ON HOLDINGS, LLC
14702 INDIAN SPRINGS RD. HANCOCK, MD 21740
(301)-491-0818

NOT APPROVED FOR CONSTRUCTION

PROJECT NO. 6454.REM	
DWN BY DWH	DATE 09-22-2021
PROJECT MANAGER ADAM HAGER	EMAIL ahager@fsa-inc.com
TAX MAP-GRID-PARCEL 0048-0009-0882	
SCALE varies	
SHEET TITLE SWM DETAILS & NOTES	

C-302
SHEET 07 OF 08

SP-21-036

SOIL EROSION, SEDIMENT CONTROL & SEEDING NOTES

1. All soil erosion/sediment control measures shall comply with the "2011 Maryland Standards and Specifications for Soil Erosion and Sediment Control" and the provisions of the approved plan.
2. All grading and stabilization shall comply with the "2011 Maryland Standards and Specifications for Soil Erosion and Sediment Control", "Section B - Grading and Stabilization" and the provisions of the approved plan.
3. All soil erosion and sediment control practices (BMP's) are to be constructed and/or installed prior to or at the initiation of grading in accordance with "2011 Maryland Standards and Specifications for Soil Erosion and Sediment Control", and the approved plan.
4. A grading unit is the maximum contiguous area allowed to be graded at a given time and is limited to 20 acres. Work may proceed to a subsequent grading unit when at least 50 percent of the disturbed area in the preceding grading unit has been stabilized and approved by the enforcement authority and/or the Washington County Soil Conservation District (approval authority). Unless otherwise specified and approved by the approval authority, no more than 30 acres cumulatively may be disturbed at a given time.
5. For initial soil disturbance or re-disturbance, temporary or permanent stabilization must be completed within:
   a) Three (3) calendar days as to the surface of all perimeter dikes, swales, ditches, perimeter slopes, and all slopes steeper than 3 horizontal to 1 vertical (3:1); and
   b) Seven (7) calendar days as to all other disturbed or graded areas on the project site not under active grading.
6. Stockpiles must be stabilized in accordance within the 7 day stabilization requirement, as well as, Standard B-4-1 Incremental Stabilization and Standard B-4-4 Temporary Stabilization (as applicable).
7. All constructed channels and swales shall have specified treatment installed to the design flow depth completed downstream to upstream as construction progresses. An installation detail shall be shown on the plans.
8. All storm drain and sanitary sewer lines not in paved areas are to be mulched and seeded within 3 days of initial backfill unless otherwise specified on plans.
9. Electric Power, telephone, and gas lines are to be compacted, seeded, and mulched within 3 days after initial backfill unless otherwise specified on plans.
10. No slope shall be greater than 2:1.
11. As required by Section B, of the Maryland Standards and Specifications for Soil Erosion and Sediment Control, "Adequate Vegetative Stabilization", is defined as 95 percent ground cover. The Washington County Soil Conservation District requires the project adhere to this for scheduling of the Final Site Closeout Review, and/or release of the site for soil erosion and sediment control.

For sites 1.0 acre or more, the following are required:

A. Maryland Department of the Environment, General Permit for Stormwater Associated with a Construction Activity, NPDES Permit Number MDRC, State Discharge Permit Number 14GP, or an Individual Permit.

B. The Maryland Department of the Environment (General/Individual Permit - Notice of Intent- NOI) application and permit shall be posted and/or available on-site at all times.

C. During construction, all soil erosion and sediment control practices (BMP's) shall be inspected and recorded on the "Standard Inspection Form", "General Permit for Stormwater Associated with Construction Activity" per the Maryland Department of the Environment (General/Individual Permit - Notice of Intent - NOI).

D. Following construction and release of the site for soil erosion and sediment control by the Washington County Soil Conservation District, i.e., all portions of a site have been permanently stabilized, and all stormwater discharges from construction sites that are authorized by the permit are eliminated, the authorized permittee shall submit the Maryland Department of the Environment, General/Individual Permit - Notice of Termination-NOT.

Sequence of Construction

1. Contractor to contact FSA, Inc. (301) 791-3650, WCSCD (301) 797-6821 ext.3, the Washington County Division of Construction (240) 313-2400 at least five (5) days prior to the start of any earthwork to schedule a pre construction meeting.
2. Contractor shall install the stabilized construction entrance.
3. Contractor shall install all smart fence 42.
4. Contractor to strip topsoil, place on stockpile on the uphill side of the 12" filter log and seed and mulch.
5. Contractor shall start rough grading starting at the downhill side and work uphill.When rough grading has been completed, contractor shall start the construction of the gravel areas.
6. Stabilize all disturbed areas with seed and mulch after excavating operations are complete. Use temporary seeding for areas left exposed for more than seven (7) consecutive days.
7. Contact Frederick Seibert, and Assoc. (301)791-3650, 2 days prior to bio-retention and pretreatment construction. Contractor shall have site area stabilize and contact WCSCD (301) 797-6821 ext.3 and the Washington County Division of Construction (240) 313-2400 before excavating the bio-retention areas. After bio-retention areas have been stabilized, contact Washington County Division of Construction (240) 313-2400 for an interim inspection and approval to install the bio-materials.
8. Construct bio-retention areas, stabilize with seed, mulch and plantings upon completion. Note that construction vehicles are prohibited from traveling over bio-retention areas.
9. (△1) Contractor shall finalize grading then seed and mulch. Stabilize areas with erosion control matting as shown on the plans.
10. Contractor to contact WCSCD (301) 797-6821, ext. 3 and the Washington County Division of Construction at (240) 313-2400 at least 5 days prior to the removal of any sediment control features to schedule a final site close out review and meeting. Contractor to gain final approval from WCSCD prior to removal of erosion and sediment controls.
11. Remove sediment and erosion control measures, and stabilize accordingly.

DETAIL B-1 STABILIZED CONSTRUCTION ENTRANCE (1 / C-501)

STANDARD SYMBOL: SCE

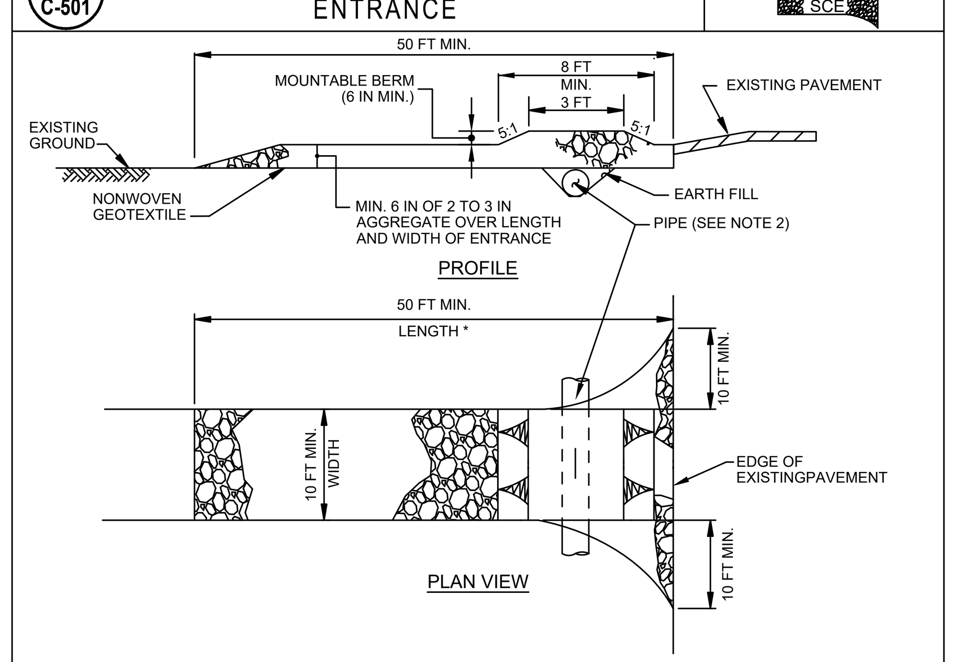

CONSTRUCTION SPECIFICATIONS

1. PLACE STABILIZED CONSTRUCTION ENTRANCE IN ACCORDANCE WITH THE APPROVED PLAN. VEHICLES MUST TRAVEL OVER THE ENTIRE LENGTH OF THE SCE. USE MINIMUM LENGTH OF 50 FEET (*30 FEET FOR SINGLE RESIDENCE LOT). USE MINIMUM WIDTH OF 10 FEET. FLARE SCE 10 FEET MINIMUM AT THE EXISTING ROAD TO PROVIDE A TURNING RADIUS.
2. PIPE ALL SURFACE WATER FLOWING TO OR DIVERTED TOWARD THE SCE UNDER THE ENTRANCE, MAINTAINING POSITIVE DRAINAGE. PROTECT PIPE INSTALLED THROUGH THE SCE WITH A MOUNTABLE BERM WITH 5:1 SLOPES AND A MINIMUM OF 12 INCHES OF STONE OVER THE PIPE. PROVIDE PIPE AS SPECIFIED ON APPROVED PLAN. WHEN THE SCE IS LOCATED AT A HIGH SPOT AND HAS NO DRAINAGE TO CONVEY, A PIPE IS NOT NECESSARY. A MOUNTABLE BERM IS REQUIRED WHEN SCE IS NOT LOCATED AT A HIGH SPOT.
3. PREPARE SUBGRADE AND PLACE NONWOVEN GEOTEXTILE, AS SPECIFIED IN SECTION H-1 MATERIALS.
4. PLACE CRUSHED AGGREGATE (2 TO 3 INCHES IN SIZE) OR EQUIVALENT RECYCLED CONCRETE (WITHOUT REBAR) AT LEAST 6 INCHES DEEP OVER THE LENGTH AND WIDTH OF THE SCE.
5. MAINTAIN ENTRANCE IN A CONDITION THAT MINIMIZES TRACKING OF SEDIMENT. ADD STONE OR MAKE OTHER REPAIRS AS CONDITIONS DEMAND TO MAINTAIN CLEAN SURFACE, MOUNTABLE BERM, AND SPECIFIED DIMENSIONS. IMMEDIATELY REMOVE STONE AND/OR SEDIMENT SPILLED, DROPPED, OR TRACKED ONTO ADJACENT ROADWAY BY VACUUMING, SCRAPING, AND/OR SWEEPING. WASHING ROADWAY TO REMOVE MUD TRACKED ONTO PAVEMENT IS NOT ACCEPTABLE UNLESS WASH WATER IS DIRECTED TO AN APPROVED SEDIMENT CONTROL PRACTICE.

MARYLAND STANDARDS AND SPECIFICATIONS FOR SOIL EROSION AND SEDIMENT CONTROL

U.S. DEPARTMENT OF AGRICULTURE NATURAL RESOURCES CONSERVATION SERVICE	2011	MARYLAND DEPARTMENT OF ENVIRONMENT WATER MANAGEMENT ADMINISTRATION

DETAIL E-6 FILTER LOG (2 / C-501)

STANDARD SYMBOL: FL-18
DESIGNATION FL-18 REFERS TO 18 INCH DIAMETER FILTER LOG.

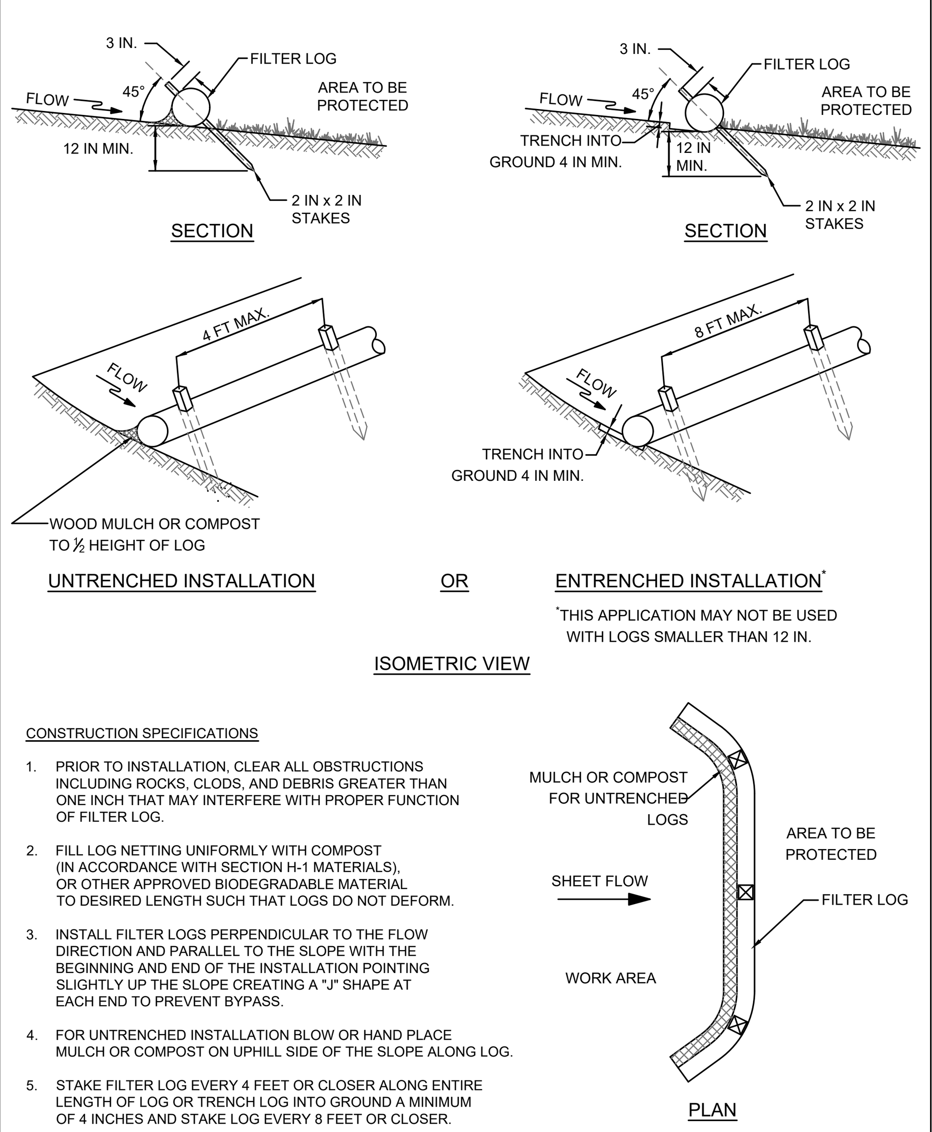

CONSTRUCTION SPECIFICATIONS

1. PRIOR TO INSTALLATION, CLEAR ALL OBSTRUCTIONS INCLUDING ROCKS, CLODS, AND DEBRIS GREATER THAN ONE INCH THAT MAY INTERFERE WITH PROPER FUNCTION OF FILTER LOG.
2. FILL LOG NETTING UNIFORMLY WITH COMPOST (IN ACCORDANCE WITH SECTION H-1 MATERIALS), OR OTHER APPROVED BIODEGRADABLE MATERIAL TO DESIRED LENGTH SUCH THAT LOGS DO NOT DEFORM.
3. INSTALL FILTER LOGS PERPENDICULAR TO THE FLOW DIRECTION AND PARALLEL TO THE SLOPE WITH THE BEGINNING AND END OF THE INSTALLATION POINTING SLIGHTLY UP THE SLOPE CREATING A "J" SHAPE AT EACH END TO PREVENT BYPASS.
4. FOR UNTRENCHED INSTALLATION BLOW OR HAND PLACE MULCH OR COMPOST ON UPHILL SIDE OF THE SLOPE ALONG LOG.
5. STAKE FILTER LOG EVERY 4 FEET OR CLOSER ALONG ENTIRE LENGTH OF LOG OR TRENCH LOG INTO GROUND A MINIMUM OF 4 INCHES AND STAKE LOG EVERY 8 FEET OR CLOSER.
6. USE STAKES WITH A MINIMUM NOMINAL CROSS SECTION OF 2X2 INCH AND OF SUFFICIENT LENGTH TO ATTAIN A MINIMUM OF 12 INCHES INTO THE GROUND AND 3 INCHES PROTRUDING ABOVE LOG.
7. WHEN MORE THAN ONE LOG IS NEEDED, OVERLAP ENDS 12 INCHES MINIMUM AND STAKE.
8. REMOVE SEDIMENT WHEN IT HAS ACCUMULATED TO A DEPTH OF ½ THE EXPOSED HEIGHT OF LOG AND REPLACE MULCH. REPLACE FILTER LOG IF TORN. REINSTALL FILTER LOG IF UNDERMINING OR DISLODGING OCCURS. REPLACE CLOGGED FILTER LOGS. FOR PERMANENT APPLICATIONS, ESTABLISH AND CONTINUOUSLY MEET REQUIREMENTS FOR ADEQUATE VEGETATIVE ESTABLISHMENT IN ACCORDANCE WITH SECTION B-4 VEGETATIVE STABILIZATION.

MARYLAND STANDARDS AND SPECIFICATIONS FOR SOIL EROSION AND SEDIMENT CONTROL

U.S. DEPARTMENT OF AGRICULTURE NATURAL RESOURCES CONSERVATION SERVICE	2011	MARYLAND DEPARTMENT OF ENVIRONMENT WATER MANAGEMENT ADMINISTRATION

DETAIL B-4-6-B TEMPORARY SOIL STABILIZATION MATTING SLOPE APPLICATION (3 / C-501)

STANDARD SYMBOL: TSSMS – * lb/ft² (* INCLUDE SHEAR STRESS)

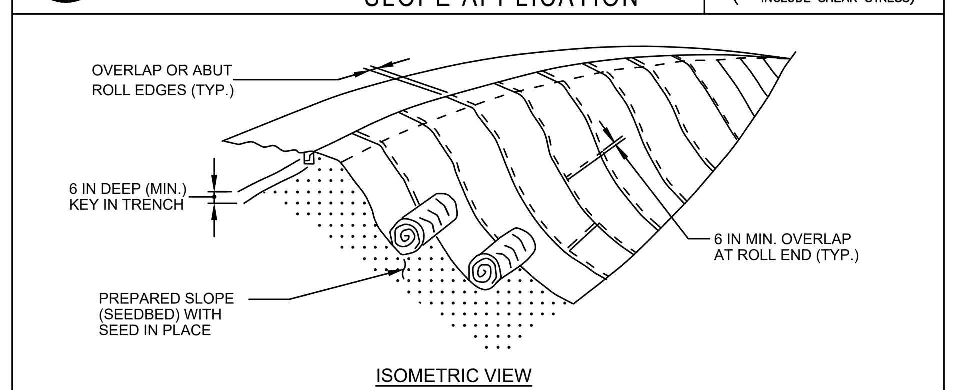

CONSTRUCTION SPECIFICATIONS

1. USE MATTING THAT HAS A DESIGN VALUE FOR SHEAR STRESS EQUAL TO OR HIGHER THAN THE SHEAR STRESS DESIGNATED ON APPROVED PLANS.
2. USE TEMPORARY SOIL STABILIZATION MATTING MADE OF DEGRADABLE (LASTS 6 MONTHS MINIMUM) NATURAL OR MAN-MADE FIBERS (MOSTLY ORGANIC). MAT MUST HAVE UNIFORM THICKNESS AND DISTRIBUTION OF FIBERS THROUGHOUT AND BE SMOLDER RESISTANT. CHEMICALS USED IN THE MAT MUST BE NON-LEACHING AND NON-TOXIC TO VEGETATION AND SEED GERMINATION AND NON-INJURIOUS TO THE SKIN. IF PRESENT, NETTING MUST BE EXTRUDED PLASTIC WITH A MAXIMUM MESH OPENING OF 2x2 INCHES AND SUFFICIENTLY BONDED OR SEWN ON 2 INCH CENTERS ALONG LONGITUDINAL AXIS OF THE MATERIAL TO PREVENT SEPARATION OF THE NET FROM THE PARENT MATERIAL.
3. SECURE MATTING USING STEEL STAPLES, WOOD STAKES, OR BIODEGRADABLE EQUIVALENT. STAPLES MUST BE "U" OR "T" SHAPED STEEL WIRE HAVING A MINIMUM GAUGE OF NO. 11 AND NO. 8 RESPECTIVELY. "U" SHAPED STAPLES MUST AVERAGE 1 TO 1½ INCHES WIDE AND BE A MINIMUM OF 6 INCHES LONG. "T" SHAPED STAPLES MUST HAVE A MINIMUM 8 INCH MAIN LEG, A MINIMUM 1 INCH SECONDARY LEG, AND A MINIMUM 4 INCH HEAD. WOOD STAKES MUST BE ROUGH-SAWN HARDWOOD, 12 TO 24 INCHES IN LENGTH, 1x3 INCH IN CROSS SECTION, AND WEDGE SHAPED AT THE BOTTOM.
4. PERFORM FINAL GRADING, TOPSOIL APPLICATION, SEEDBED PREPARATION, AND PERMANENT SEEDING IN ACCORDANCE WITH SPECIFICATIONS. PLACE MATTING WITHIN 48 HOURS OF COMPLETING SEEDING OPERATIONS UNLESS END OF WORKDAY STABILIZATION IS SPECIFIED ON THE APPROVED EROSION & SEDIMENT CONTROL PLAN.
5. UNROLL MATTING DOWNSLOPE. LAY MAT SMOOTHLY AND FIRMLY UPON THE SEEDED SURFACE. AVOID STRETCHING THE MATTING.
6. OVERLAP OR ABUT ROLL EDGES PER MANUFACTURER RECOMMENDATIONS. OVERLAP ROLL ENDS BY 6 INCHES (MINIMUM), WITH THE UPSLOPE MAT OVERLAPPING ON TOP OF THE DOWNSLOPE MAT.
7. KEY IN THE UPSLOPE END OF MAT 6 INCHES (MINIMUM) BY DIGGING A TRENCH, PLACING THE MATTING ROLL END IN THE TRENCH, STAPLING THE MAT IN PLACE, REPLACING THE EXCAVATED MATERIAL, AND TAMPING TO SECURE THE MAT END IN THE KEY.
8. STAPLE/STAKE MAT IN A STAGGERED PATTERN ON 4 FOOT (MAXIMUM) CENTERS THROUGHOUT AND 2 FOOT (MAXIMUM) CENTERS ALONG SEAMS, JOINTS, AND ROLL ENDS.
9. ESTABLISH AND MAINTAIN VEGETATION SO THAT REQUIREMENTS FOR ADEQUATE VEGETATIVE ESTABLISHMENT ARE CONTINUOUSLY MET IN ACCORDANCE WITH SECTION B-4 VEGETATIVE STABILIZATION.

MARYLAND STANDARDS AND SPECIFICATIONS FOR SOIL EROSION AND SEDIMENT CONTROL

U.S. DEPARTMENT OF AGRICULTURE NATURAL RESOURCES CONSERVATION SERVICE	2011	MARYLAND DEPARTMENT OF ENVIRONMENT WATER MANAGEMENT ADMINISTRATION

STANDARD UTILITY NOTES:

1. Contractor to only open up length of trench that can be constructed and backfilled in one working day in paved areas.
2. Contractor to place excavated materials in a dump truck and hauled to an approved location to wasted materials to paved areas.
3. Contractor to backfill trench with approved materials and stabilize disturbed areas the same working day.
4. In areas where the construction takes to place outside of the existing roadbed, Contractor to install silt fence along the downhill side of the trench before beginning construction and place excavated material from the trench on the uphill side.
5. If dewatering of the trench is required, Contractor to pump water to a filter bag to dewater.
6. Contractor to sweep streets of any debris or sediments caused by construction operations and dispose of at an approved location.
7. Contractor to stabilize all disturbed areas with seed & mulch or appropriate street repair.

TEMPORARY SEEDING SUMMARY

HARDINESS ZONE (FIGURE B.3): 6a & (6b) SEED MIXTURE (TABLE B.1)					FERTILIZER RATE (10-20-20)	LIME RATE
NO.	SPECIES	APPLICATION RATE (lb/ac)	SEEDING DATES	SEEDING DEPTHS		
1	Barley	96	Zone 6a: Mar 15-May 31/ Aug 1-Sept 30 (Zone 6b: Mar 1-May 15/ Aug 1-Oct 15)	1"	436 lb/ac. (10 lb/1000 s.f.)	2 tons/ac. (90 lb/1000 s.f.)

PERMANENT SEEDING SUMMARY

HARDINESS ZONE (FIGURE B.3): 6a & (6b) SEED MIXTURE (TABLE B.1)					FERTILIZER RATE (10-20-20)			LIME RATE
NO.	SPECIES	APPLICATION RATE (lb/ac)	SEEDING DATES	SEEDING DEPTH	N	P205	K20	
6	Tall Fescue	40	Zone 6a: Mar 15-May 31/Aug 1-Sept 30 (Zone 6b: Mar 1-May 15/Aug 1-Oct 15)	1/4"-1/2"	45 lb/ac. (1 lb/1000 s.f.)	90 lb/ac. (2 lb/1000 s.f.)	90 lb/ac. (2 lb/1000 s.f.)	2 tons/ac. (90 lb/1000 s.f.)
	Perennial Ryegrass	25						
	White Clover	5						

SMART FENCE 42 (4 / C-501)

LET'S GET IT DONE

SMARTfence® 42 Detail:

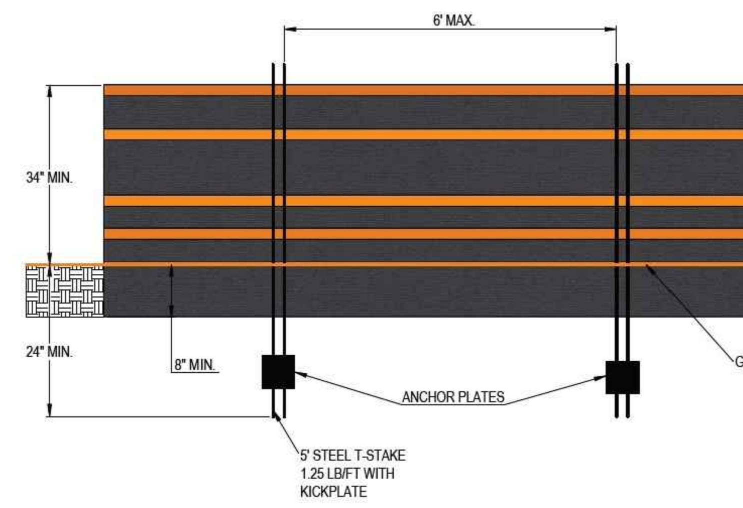

SMARTfence® 42 is NTPEP Compliant
GTX-2018-01-187

SMART FENCE 42
NOT TO SCALE

ACF ENVIRONMENTAL — LET'S GET IT DONE® — 800.448.3636 — acfenvironmental.com

SMARTFENCE 42" INSTALLATION INSTRUCTIONS

SEDIMENT & PERIMETER CONTROL

STEP 1: Excavate trench a maximum of 4" wide and 6" deep. The trench shall be hand-cleaned following excavation to remove bulky debris such as rocks, sticks, and soil clods from the trench. Drive studded metal T-posts with anchor plates having a minimum weight of 1.25 lb /ft and a minimum 5 ft length. Drive post into ground a minimum of 18" depth. Post spacing must be no greater than 6 ft maximum.

STEP 2: Layout SMARTfence® 42 along proposed fence line next to anchor trench. Locate one end of the SMARTfence® 42 and position near the initial post. Position SMARTfence® 42 vertically along the initial post.

STEP 3: For the initial post, place the end of SMARTfence® 42 along the post height and rotate the post 360 degrees, maintaining tension on the fence system. Secure the fence to the post at all four (4) orange-colored band locations with steel wire or nylon ties.

STEP 4: For fastening SMARTfence® 42 to studded, metal T-posts using one of following methods:

- Method I (T-Post): 16-gage wire- attach SMARTfence® 42 to metal T-posts using the 16-gage 304 SS wire with mitered ends, securing the fence to the post using safety pliers.
- Method II (T-Post): 8" nylon heavy-duty, UV-stabilized, cable ties (zip-ties) with minimum 120-lb tensile strength. Puncture two 0.25" openings, spaced at a width apart that is roughly equivalent to the post width, and secure the fence to the post.

STEP 5: Drive the initial post with the attached fence into the ground to a 18" depth.

STEP 6: Drive the interior t-posts of the fence system into the ground at least 18".

STEP 7: Move to the next t-post while pulling SMARTfence® 42 tightly. Position the SMARTfence® 42 in front of the adjacent t-post in preparation for fastening the fence to the post. Fasten fence to post at all four (4) orange-colored band locations as instructed in Step 4.

STEP 8: After the interior posts have been fastened to the SMARTfence® 42, secure the fence to the final post by pulling the final section of fencing taut, then rotating the post 360 degrees, maintaining tension on the fence system. Secure the fence to the post at all four (4) orange-colored band locations with the steel wire or nylon ties per Step 4. Drive the final post into the ground to a 18" depth.

STEP 9: Place bottom 8" of fabric into the trench. Backfill trench (overfill) with soil placed around fabric. Compact soil backfill with either manual tamping (or other manual means) or via mechanical equipment such as the front wheel of a tractor, skid steer, roller, or other device (per Note 5 of ASTM D 6462 Standard Practice for Silt Fence Installation). Do not damage the fabric during compaction (damaged fabric shall be replaced).

Please contact our team at 800-448-3636 or info@acfenv.com with any questions regarding the installation process.

LET'S GET IT DONE!™

SMARTfence

For more information, contact our Inside Sales team at 800.448.3636 email at info@acfenv.com

ACF ENVIRONMENTAL

DETAIL B-4-6-A TEMPORARY SOIL STABILIZATION MATTING CHANNEL APPLICATION (5 / C-501)

STANDARD SYMBOL: TSSMC - * lb/ft² (* INCLUDE SHEAR STRESS)

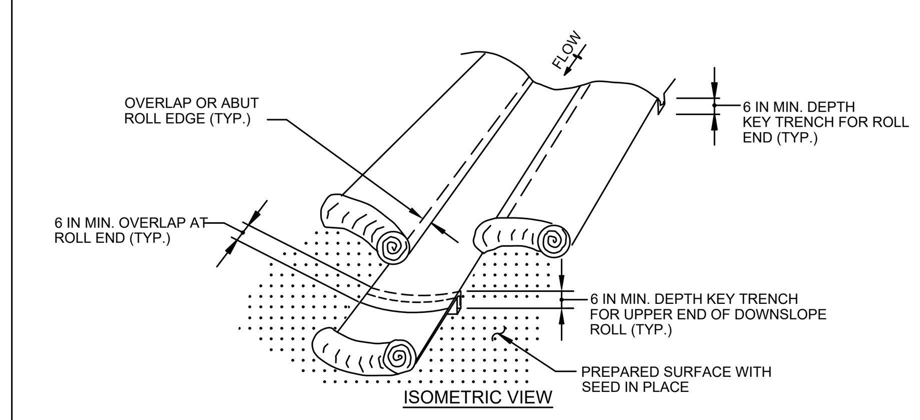

CONSTRUCTION SPECIFICATIONS

1. USE MATTING THAT HAS A DESIGN VALUE FOR SHEAR STRESS EQUAL TO OR HIGHER THAN THE SHEAR STRESS DESIGNATED ON APPROVED PLANS.
2. USE TEMPORARY SOIL STABILIZATION MATTING MADE OF DEGRADABLE (LASTS 6 MONTHS MINIMUM) NATURAL OR MAN-MADE FIBERS (MOSTLY ORGANIC). MAT MUST HAVE UNIFORM THICKNESS AND DISTRIBUTION OF FIBERS THROUGHOUT AND BE SMOLDER RESISTANT. CHEMICALS USED IN THE MAT MUST BE NON-LEACHING AND NON-TOXIC TO VEGETATION AND SEED GERMINATION AND NON-INJURIOUS TO THE SKIN. IF PRESENT, NETTING MUST BE EXTRUDED PLASTIC WITH A MAXIMUM MESH OPENING OF 2x2 INCHES AND SUFFICIENTLY BONDED OR SEWN ON 2 INCH CENTERS ALONG LONGITUDINAL AXIS OF THE MATERIAL TO PREVENT SEPARATION OF THE NET FROM THE PARENT MATERIAL.
3. SECURE MATTING USING STEEL STAPLES, WOOD STAKES, OR BIODEGRADABLE EQUIVALENT. STAPLES MUST BE "U" OR "T" SHAPED STEEL WIRE HAVING A MINIMUM GAUGE OF NO. 11 AND NO. 8 RESPECTIVELY. "U" SHAPED STAPLES MUST AVERAGE 1 TO 1½ INCHES WIDE AND BE A MINIMUM OF 6 INCHES LONG. "T" SHAPED STAPLES MUST HAVE A MINIMUM 8 INCH MAIN LEG, A MINIMUM 1 INCH SECONDARY LEG, AND A MINIMUM 4 INCH HEAD. WOOD STAKES MUST BE ROUGH-SAWN HARDWOOD, 12 TO 24 INCHES IN LENGTH, 1x3 INCH IN CROSS SECTION, AND WEDGE SHAPED AT THE BOTTOM.
4. PERFORM FINAL GRADING, TOPSOIL APPLICATION, SEEDBED PREPARATION, AND PERMANENT SEEDING IN ACCORDANCE WITH SPECIFICATIONS. PLACE MATTING WITHIN 48 HOURS OF COMPLETING SEEDING OPERATIONS UNLESS END OF WORKDAY STABILIZATION IS SPECIFIED ON THE APPROVED EROSION AND SEDIMENT CONTROL PLAN.
5. UNROLL MATTING IN DIRECTION OF WATER FLOW, CENTERING THE FIRST ROLL ON THE CHANNEL CENTERLINE. WORK FROM CENTER OF CHANNEL OUTWARD WHEN PLACING ROLLS. LAY MAT SMOOTHLY AND FIRMLY ON THE SEEDED SURFACE. AVOID STRETCHING THE MATTING.
6. KEY-IN UPSTREAM END OF EACH MAT ROLL BY DIGGING A 6 INCH (MINIMUM) TRENCH AT THE UPSTREAM END OF THE MATTING, PLACING THE ROLL END IN THE TRENCH, STAPLING THE MAT IN PLACE, REPLACING THE EXCAVATED MATERIAL, AND TAMPING TO SECURE THE MAT END.
7. OVERLAP OR ABUT THE ROLL EDGES PER MANUFACTURER RECOMMENDATIONS. OVERLAP ROLL ENDS BY 6 INCHES (MINIMUM), WITH THE UPSTREAM MAT OVERLAPPING ON TOP OF THE NEXT DOWNSTREAM MAT.
8. STAPLE/STAKE MAT IN A STAGGERED PATTERN ON 4 FOOT (MAXIMUM) CENTERS THROUGHOUT AND 2 FOOT (MAXIMUM) CENTERS ALONG SEAMS, JOINTS, AND ROLL ENDS.
9. ESTABLISH AND MAINTAIN VEGETATION SO THAT REQUIREMENTS FOR ADEQUATE VEGETATIVE ESTABLISHMENT ARE CONTINUOUSLY MET IN ACCORDANCE WITH SECTION B-4 VEGETATIVE STABILIZATION.

MARYLAND STANDARDS AND SPECIFICATIONS FOR SOIL EROSION AND SEDIMENT CONTROL

U.S. DEPARTMENT OF AGRICULTURE NATURAL RESOURCES CONSERVATION SERVICE	2011	MARYLAND DEPARTMENT OF ENVIRONMENT WATER MANAGEMENT ADMINISTRATION

DETAIL B-4-6-C PERMANENT SOIL STABILIZATION MATTING CHANNEL APPLICATION (6 / C-501)

STANDARD SYMBOL: PSSMC - * lb/ft² (* INCLUDE SHEAR STRESS)

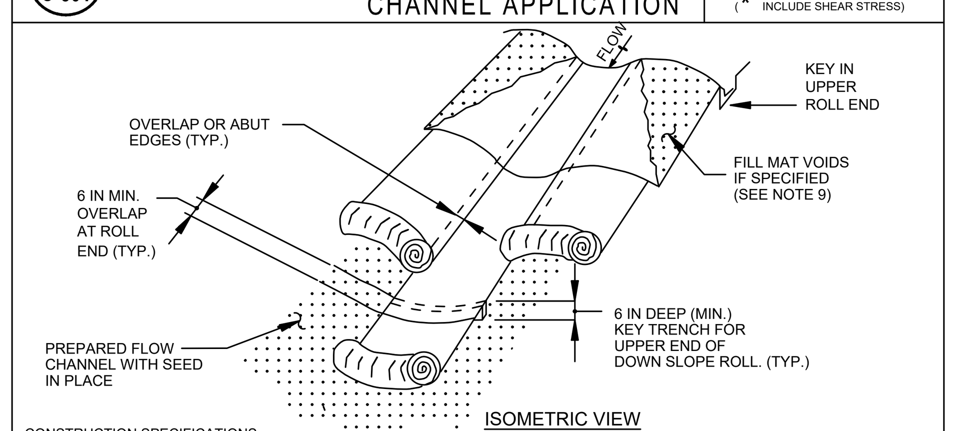

CONSTRUCTION SPECIFICATIONS

1. USE MATTING THAT HAS A DESIGN VALUE FOR SHEAR STRESS EQUAL TO OR HIGHER THAN THE SHEAR STRESS DESIGNATED ON APPROVED PLANS.
2. USE PERMANENT SOIL STABILIZATION MATTING MADE OF OPEN WEAVE SYNTHETIC, NON-DEGRADABLE FIBERS OR ELEMENTS OF UNIFORM THICKNESS AND DISTRIBUTION THROUGHOUT. CHEMICALS USED IN THE MAT MUST BE NON-LEACHING AND NON-TOXIC TO VEGETATION AND SEED GERMINATION AND NON-INJURIOUS TO THE SKIN. IF PRESENT, NETTING MUST BE EXTRUDED PLASTIC WITH A MAXIMUM MESH OPENING OF 2x2 INCHES AND SUFFICIENTLY BONDED OR SEWN ON 2 INCH CENTERS ALONG LONGITUDINAL AXIS OF THE MATERIAL TO PREVENT SEPARATION OF THE NET FROM THE PARENT MATERIAL.
3. SECURE MATTING USING STEEL STAPLES OR WOOD STAKES. STAPLES MUST BE "U" OR "T" SHAPED STEEL WIRE HAVING A MINIMUM GAUGE OF NO. 11 AND NO. 8 RESPECTIVELY. "U" SHAPED STAPLES MUST AVERAGE 1 TO 1½ INCHES WIDE AND BE A MINIMUM OF 6 INCHES LONG. "T" SHAPED STAPLES MUST HAVE A MINIMUM 8 INCH MAIN LEG, A MINIMUM 1 INCH SECONDARY LEG, AND MINIMUM 4 INCH HEAD. WOOD STAKES MUST BE ROUGH-SAWN HARDWOOD, 12 TO 24 INCHES IN LENGTH, 1x3 INCH IN CROSS SECTION, AND WEDGE SHAPE AT THE BOTTOM.
4. PERFORM FINAL GRADING, TOPSOIL APPLICATION, SEEDBED PREPARATION, AND PERMANENT SEEDING IN ACCORDANCE WITH SPECIFICATIONS. PLACE MATTING WITHIN 48 HOURS OF COMPLETING SEEDING OPERATIONS, UNLESS END OF WORKDAY STABILIZATION IS SPECIFIED ON THE APPROVED EROSION AND SEDIMENT CONTROL PLAN.
5. UNROLL MATTING IN DIRECTION OF WATER FLOW, CENTERING THE FIRST ROLL ON THE CHANNEL CENTER LINE. WORK FROM CENTER OF CHANNEL OUTWARD WHEN PLACING ROLLS. LAY MATTING SMOOTHLY AND FIRMLY UPON THE SEEDED SURFACE. AVOID STRETCHING THE MATTING.
6. OVERLAP OR ABUT EDGES OF MATTING ROLLS PER MANUFACTURER RECOMMENDATIONS. OVERLAP ROLL ENDS BY 6 INCHES (MINIMUM), WITH THE UPSTREAM MAT OVERLAPPING ON TOP OF THE NEXT DOWNSTREAM MAT.
7. KEY IN THE TOP OF SLOPE END OF MAT 6 INCHES (MINIMUM) BY DIGGING A TRENCH, PLACING THE MATTING ROLL END IN THE TRENCH, STAPLING THE MAT IN PLACE, REPLACING THE EXCAVATED MATERIAL, AND TAMPING TO SECURE THE MAT END IN THE KEY.
8. STAPLE/STAKE MAT IN A STAGGERED PATTERN ON 4 FOOT (MAXIMUM) CENTERS THROUGHOUT AND 2 FOOT (MAXIMUM) CENTERS ALONG SEAMS, JOINTS, AND ROLL ENDS.
9. IF SPECIFIED BY THE DESIGNER OR MANUFACTURER AND DEPENDING ON THE TYPE OF MAT BEING INSTALLED, ONCE THE MATTING IS KEYED AND STAPLED IN PLACE, FILL THE MAT VOIDS WITH TOP SOIL OR GRANULAR MATERIAL AND LIGHTLY COMPACT OR ROLL TO MAXIMIZE SOIL/MAT CONTACT WITHOUT CRUSHING MAT.
10. ESTABLISH AND MAINTAIN VEGETATION SO THAT REQUIREMENTS FOR ADEQUATE VEGETATIVE ESTABLISHMENT ARE CONTINUOUSLY MET IN ACCORDANCE WITH SECTION B-4 VEGETATIVE STABILIZATION.

MARYLAND STANDARDS AND SPECIFICATIONS FOR SOIL EROSION AND SEDIMENT CONTROL

U.S. DEPARTMENT OF AGRICULTURE NATURAL RESOURCES CONSERVATION SERVICE	2011	MARYLAND DEPARTMENT OF ENVIRONMENT WATER MANAGEMENT ADMINISTRATION

SWALE DETAIL (7 / C-501)

SWALE #	Q10	V10	DEPTH	SLOPE	WIDTH	TOP WIDTH
1	1.74 cfs	0.51 fps	0.24'	3'	3'	11'

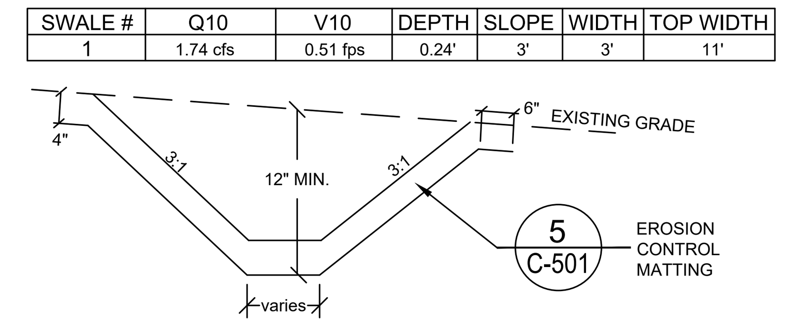

NOTE:
1. ALL SWALES TO BE LINED WITH EROSION CONTROL MATTING. TO DESIGN FLOW DEPTH
2. ALL DIMENSIONS LABELED AS MIN. ON THIS DETAIL MAY BE SUPERSEDED BY GREATER DIMENSIONS WHICH WOULD BE NOTED DIRECTLY ON PLAN, IF NECESSARY.

SWALE DETAIL
NOT TO SCALE

STANDARD METAL END SECTION ROUND METAL PIPE (8 / C-501) △2

DIMENSIONS								
PIPE DIA.	GA.	A 1"±	B MAX.	H 1"±	L 1/2 ±	W 2"±	APPROX. SLOPE	UNIT
12"	16	6"	6"	6"	21"	24"	2 1/2	1 PC.
15"	16	7"	8"	6"	26"	30"	2 1/2	1 PC.
18"	16	8"	10"	6"	31"	36"	2 1/2	1 PC.
21"	16	9"	12"	6"	36"	42"	2 1/2	1 PC.
24"	16	10"	13"	6"	41"	48"	2 1/2	1 PC.
30"	14	12"	16"	8"	51"	60"	2 1/2	1 PC.
36"	14	14"	19"	9"	60"	72"	2 1/2	2 PC.
42"	12	16"	22"	11"	69"	84"	2 1/2	2 PC.
48"	12	18"	27"	12"	78"	90"	2 1/4	2 OR 3 PC.
54"	12	18"	30"	12"	84"	102"	2	2 OR 3 PC.
60"	12 & 10	18"	33"	12"	87"	114"	1 3/4	3 PC.
66"	12 & 10	18"	36"	12"	87"	120"	1 1/2	3 PC.
72"	12 & 10	18"	39"	12"	87"	126"	1 1/3	3 PC.
78"	12 & 10	18"	42"	12"	87"	132"	1 1/4	3 PC.
84"	12 & 10	18"	45"	12"	87"	138"	1 1/6	3 PC.

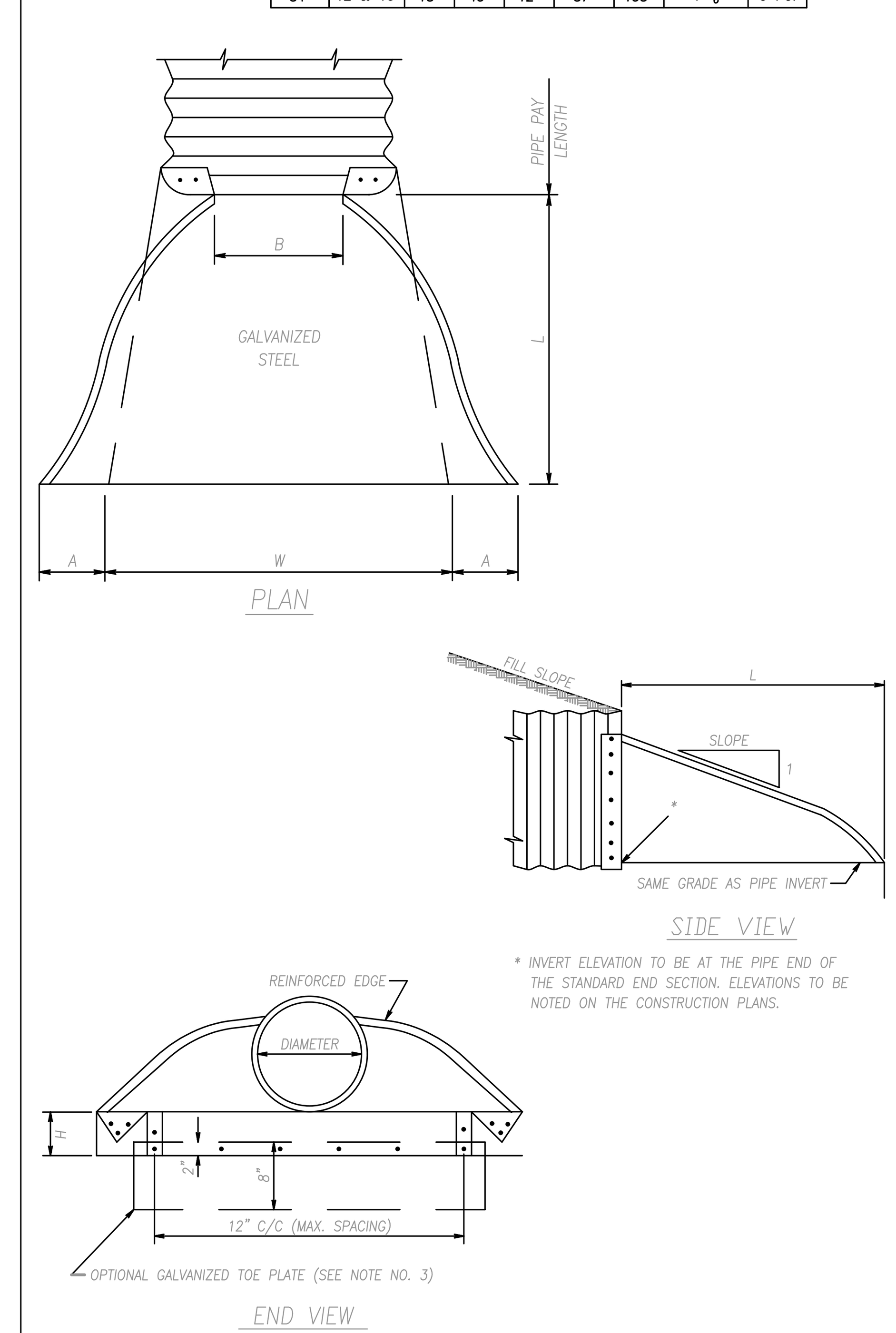

NOTES

1. ALL 3 PIECE UNITS TO HAVE 12 GA. SIDES AND 10 GA. CENTER PANELS (EXCEPT 48" AND 54" PIPES, ALL PANELS SHALL BE 12 GA.) WIDTH OF CENTER PANELS TO BE GREATER THAN 20% OF THE PIPE PERIPHERY. MULTIPLE PANEL UNITS TO HAVE LAP SEAMS WHICH ARE TO BE TIGHTLY JOINED BY 3/8 " 0 GALVANIZED RIVETS OR BOLTS.
2. FOR 60" THRU 84" SIZES, REINFORCED EDGES TO BE SUPPLEMENTED WITH GALVANIZED STIFFENER ANGLES. THE ANGLE WILL BE 2" x 2" x 1/4 " FOR 60" THRU 72" DIAMETER AND 2 1/2 " x 2 1/2 " x 1/4 " FOR 78" AND 84" DIAMETER. THE ANGLES TO BE ATTACHED BY 3/8 " 0 GALVANIZED NUTS AND BOLTS.
3. TOE PLATE SHALL BE USED WHEN SPECIFIED ON THE PLANS. COST OF TOE PLATE TO BE INCLUDED IN BID PRICE PER EACH OF METAL END SECTION.
4. TYPE 3 CONNECTION INCLUDES ONE FOOT OF PIPE LENGTH FOR 42" THRU 84" DIAMETER AS A CONNECTOR SECTION. THE CONNECTOR SECTION WILL BE ATTACHED TO THE END SECTION BY GALVANIZED RIVETS OR BOLTS. SEE STANDARD MD 370.11.
5. WHERE END SECTION IS TO BE APPLIED TO A STRUCTURAL PLATE PIPE, THE END SECTION SHALL BE ORDERED WITHOUT THE ONE FOOT OF PIPE LENGTH AS STIPULATED IN NOTE 4; INSTEAD, DRILL HOLES AND FIELD BOLT THE END SECTION DIRECTLY TO THE STRUCTURAL PLATE PIPE.

STANDARD METAL END SECTION
ROUND METAL PIPE
NOT TO SCALE
STANDARD NO. MD 370.01

STATE OF MARYLAND — TREVOR M. FREDERICK — 49808 — PROFESSIONAL ENGINEER
12/21/2021

Professional Certification:
I hereby certify that these documents were prepared or approved by me, and that I am a duly licensed professional under the laws of the State of: MARYLAND, License # 49808, Expiration Date 08-24-2022.

FSA — FREDERICK, SEIBERT & ASSOCIATES, INC. ©2021 — fsa-inc.com
CIVIL ENGINEERS • SURVEYORS • LANDSCAPE ARCHITECTS • LAND PLANNERS
128 SOUTH POTOMAC STREET, HAGERSTOWN, MD 21740, 301.791.3650
20 WEST BALTIMORE STREET, GREENCASTLE, PA 17225, 717.597.1007
505 SOUTH HANOVER STREET, CARLISLE, PA 17013, 717.701.8111
15 EAST MAIN STREET, NEW BLOOMFIELD, PA 17068, 717.275.7531

MARK:	DESCRIPTION:	DATE:
△1	REVISED PER WCSCD COMMENTS	12/16/21
△2	REVISED PER ENGINEERING COMMENTS	12/17/21

NOT APPROVED FOR CONSTRUCTION

ROWLAND ON HOLDINGS, LLC
SITUATE AT THE SOUTH END OF FRENCH LANE
EAST OF GREENCASTLE PIKE MD ROUTE 63 AND NORTH OF INTERSTATE 70
WASHINGTON COUNTY, MARYLAND
ROWLAND ON HOLDINGS, LLC
14702 INDIAN SPRINGS RD. HANCOCK, MD 21740
(301)-491-0818

PROJECT NO.	6454.REM
DWN BY	DWH
DATE	09-22-2021
PROJECT MANAGER	ADAM HAGER
EMAIL	ahager@fsa-inc.com
TAX MAP-GRID-PARCEL	0048-0009-0882
SCALE	NTS
SHEET TITLE	CONSTRUCTION DETAILS & NOTES - E & S

C-501
SHEET 08 OF 08

SP-21-036

P:\SHARED FOLDERS\PROJECTS\6454 FRENCH LANE\6454\6454-REM\DWG\CONSTRUCTION SET\6454-REM-08-C-501-CONSTRUCTION DETAILS & NOTES - E & S.DWG 12/21/2021