SITE RENOVATION PLAN

FOR

SHEETZ #145- HAGERSTOWN

SITUATED AT 18717 LONGMEADOW ROAD

WASHINGTON COUNTY, MARYLAND

APPROVALS

MD-ENG-6A 1/89 — USDA SCS

UTILITY NOTIFICATION

The Soil Conservation District makes no representation as to the existence or nonexistence of any utilities at the construction site. Shown on these construction drawings are those utilities which have been identified. It is the responsibility of the landowners or operators and contractors to assure themselves that no hazard exists or damage will occur to utilities. It is suggested that Miss Utility be contacted at:

Phone No. 1-800-257-7777

DISTURBED AREA QUANTITY

THE TOTAL AREA TO BE DISTURBED SHOWN ON THESE PLANS HAS BEEN DETERMINED TO BE APPROXIMATELY 1.2 ACRES AND THE TOTAL AMOUNT OF EXCAVATION AND FILL AS SHOWN ON THESE PLANS HAS BEEN COMPUTED TO BE APPROXIMATELY 92 CU. YDS. OF EXCAVATION AND APPROXIMATELY 520 CU. YDS. OF FILL.

WASHINGTON COUNTY SOIL CONSERVATION DISTRICT
SOIL EROSION AND SEDIMENT CONTROL PLAN APPROVAL

By: _____

Date: _____
(PLAN IS VALID FOR TWO YEARS FROM DATE OF APPROVAL)

WASHINGTON COUNTY DIVISION OF ENGINEERING
GRADING & STORMWATER MANAGEMENT APPROVAL

SIGNATURE — DATE

ENGINEER'S STORMWATER MANAGEMENT CERTIFICATION

"I verify and affirm that the Construction for the Stormwater Management Facilities as performed either meets or exceeds the requirements and design intent of this plan, including all specifications and referenced standards, and has been completed in accordance with good construction practices. I also verify and affirm that I have reviewed the construction inspection documentation and the as-built information; that it has been done in accordance with Washington County requirements and at a level deemed necessary to assure the Verification made herein; and all discrepancies between the as-built information and approved plans have been noted and are considered acceptable to the Consultant."

SIGNATURE — DATE — SEAL

OWNER / DEVELOPERS CERTIFICATION

"I/We certify all/any parties responsible for clearing, grading, construction and/or development will; be done pursuant to this plan and responsible personnel involved in the construction project will have a Certificate of Training at a Maryland Dept. of the Environment approved training program for the control of soil erosion and sediment."

12/9/2021 — DATE
Steven P. Augustine, VP of Store Development — PRINTED NAME
SIGNATURE

OWNER / DEVELOPERS CERTIFICATION

"I/we hereby certify that all clearing, grading, construction and/or development will be done pursuant to this plan and in accordance with the Stormwater Management Ordinance of Washington County and the policy on construction of subdivision infrastructure for acceptance and ownership by Washington County (S-3)."

12/9/2021 — DATE
Steven P. Augustine, VP of Store Development — PRINTED NAME
SIGNATURE

ENGINEER / ARCHITECT DESIGN CERTIFICATION

I hereby certify this plan for soil erosion and sediment control has been designed in accordance with local ordinances, COMAR 26.17.01.07, and Maryland Standards and Specifications for Soil Erosion and Sediment Control.

01/24/2022 — DATE
20945 — REG. NO.
SIGNATURE

OWNER:
PENNSYLVANIA AVENUE 2003 LLC
10228 GOVERNOR LANE BLVD
SUITE 3002
WILLIAMSPORT, MD 21795
ATTN: JEFF TEDRICK
EMAIL: Jtedrick@dmbowman.com
PHONE: 301-582-1555

CLIENT/DEVELOPER:
SHEETZ, INC
351 SHEETZ WAY
CLAYSBURG, PA 16625
ATTN: BOB FRANKS
EMAIL: bfranks@sheetz.com
PHONE: 814.933.4798

CIVIL ENGINEER / SURVEYOR:
FREDERICK SEIBERT & ASSOCIATES, INC.
128 SOUTH POTOMAC STREET
HAGERSTOWN, MD 21740

PROJECT MANAGER: DAVID TROSTLE
EMAIL: dave@fsa-md.com
PHONE: 301.791.3650

VICINITY MAP

SCALE: 1" = 2000'

USGS MAPS (HAGERSTOWN)

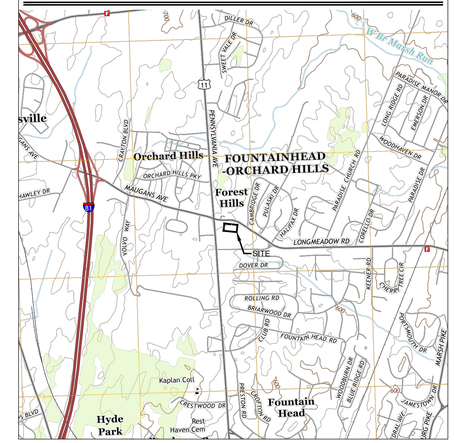

SHEET INDEX

TYPE	NUMBER	TITLE
C-001	SHEET 01	COVER SHEET
C-002	SHEET 02	NOTES & LEGENDS
C-101	SHEET 03	EXISTING CONDITIONS
C-102	SHEET 04	DEMOLITION PLAN
C-103	SHEET 05	EROSION & SEDIMENT CONTROL PLAN
C-104	SHEET 06	GRADING PLAN
C-105	SHEET 07	UTILITY & DRAINAGE PLAN
C-104	SHEET 08	SITE & DIMENSION PLAN
C-401	SHEET 09	CONSTRUCTION PROFILES - UTILITY
C-501	SHEET 10	CONSTRUCTION DETAILS & NOTES - ESC
C-502	SHEET 11	CONSTRUCTION DETAILS & NOTES - SITE
C-503	SHEET 12	CONSTRUCTION DETAILS & NOTES - SITE

STORMWATER NARRATIVE

This stormwater management narrative is for the development of a previously graded and developed site, existing C-Store site, into a 6,077 square foot Sheetz Convenience Store and Gas Station, with associated drive aisles and parking spaces. The site is located on the southeast corner of the Virginia Avenue and Longmeadow Road intersection. The site is located within the review jurisdiction of the Washington County Plan Review Department and Washington County Soil Conservation District. The development of the site will create 1.2 acres of soil disturbance. The site currently has 1.71 acres of existing impervious cover, and the proposed development will reduce existing impervious cover by 0.01 acres (143 sf). The stormwater runoff created by the proposed development will be treated and controlled in an existing stormwater undergound system, located around the perimeter of the site and within the parking lot of the car wash. A new Filterra structure will be located onsite, along the perimeter of the parking area, to meet WQv for area within this sump area.The existing stormwater facility was designed and constructed to provide WQv, CPv, Qp, and Qf for all impervious coverage of the entire 2.3 acre parcel.

Chapter 5 - Structural						
Type	No.	D.A. (Acres) (To Structure)	Impervious D.A. (Acres) (To Structure)	ESDv (ac-ft)	WQv (ac-ft)	P.E. Addressed
Filterra	1	0.10	0.10	0.002	0.002	N/A

Know what's **below.** **Call** before you dig.

STATE OF MARYLAND — DAVID MICHAEL MOORE — 20945 — REGISTERED PROFESSIONAL ENGINEER
01/24/2022

Professional Certification:
I hereby certify that these documents were prepared or approved by me, and that I am a duly licensed professional under the laws of the State of: MARYLAND License # 20945
Expiration Date 06-23-2023

FSA
FREDERICK, SEIBERT & ASSOCIATES, INC. © 2021
CIVIL ENGINEERS • SURVEYORS • LANDSCAPE ARCHITECTS • LAND PLANNERS
128 SOUTH POTOMAC STREET HAGERSTOWN, MD 21740 301 791-3650
20 WEST BALTIMORE STREET GREENCASTLE, PA 17225 717.267.4007
555 SOUTH HANOVER STREET CARLISLE, PA 17013 717.249.0111
5201 SPRING ROAD SHERMANS DALE, PA 17090 717.582.8808
fsa-inc.com

MARK	DESCRIPTION	DATE

SHEETZ #145 - HAGERSTOWN
SITUATED AT 18717 LONGMEADOW ROAD
WASHINGTON COUNTY, MARYLAND
SHEETZ INC.
351 SHEETZ WAY CLAYSBURG, PA 16625

PROJECT NO. 7989.0
DWN BY BRADY BLAIR — DATE 10-06-2021
PROJECT MANAGER DAVID TROSTLE — EMAIL dave@fsa-md.com
TAX MAP - GRID - PARCEL
SCALE AS SHOWN
SHEET TITLE

COVER SHEET

C-001
SHEET 01 OF 12

SP-21-031

P:\SHEETZ FOLDERS\PROJECTS\7989\7989 LONGVIEW PLANNING - COVER SHEET.DWG - 1/24/2022

GENERAL NOTES

1. Any damage to adjoining public roads, utilities, etc. during construction will be repaired in kind by the contractor.
2. No subsurface investigation has been performed by Frederick, Seibert and Associates, Inc. to determine ground water, rock, sinkholes or any other natural or man-made existing features. See geotech report by Triad Engineering, Inc. for sub-surface findings.
3. FSA, Inc. assumes no liability for the location of any above ground and below ground utilities. Existing utilities are shown from the best available information. Contractor to field verify location and depth of all above and below ground utilities prior to construction.
4. The contractor shall locate existing utilities in advance of construction operations in the vicinity of proposed utilities.
5. The contractor shall take all necessary precautions to protect the existing utilities and to maintain uninterrupted service. Any damage incurred due to the contractor's operation shall be repaired immediately at the contractor's expense. Contractor to use caution in areas where low hanging wires exist.
6. All utilities shall be cleared by a minimum of 1'-0". All utility poles shall be cleared by a minimum of 2'-0" or tunneled if required.
7. The Contractor shall notify the following utilities or agencies at least five (5) days before starting work shown on these drawings:

Miss Utility	1-800-257-7777
Potomac Edison	1-800-255-3443
Columbia Gas (Hagerstown)	(301) 733-1010
Verizon	(301) 790-7124
Antietam Cable	(240) 420-2082
Washington County Plan Review Department	(301) 313-2443
Washington County Construction Division	(301) 313-2480
City of Hagerstown Utilities Department	(301) 739-8577 Ext. 650
Washington County Soil Conservation District	(301) 797-6821 Ext. 3

8. The contractor shall be responsible for coordination of his construction with the construction of other contractors.
9. Benchmarks to be established by FSA prior to the start of construction.
10. The contractor shall notify the Architect/Engineer, before construction, of any conflicts between the plans and actual field conditions.
11. The contractor shall protect all utilities and culvert pipes during construction by insuring proper cover, increasing cover, or constructing roadway and parking through base course before loading site with heavy vehicles.
12. Job site safety is the sole responsibility of the contractor. The Contractor shall perform all excavation in accordance with O.S.H.A. Regulations for trench safety.
13. The contractor shall perform his own field inspection and surveys (if necessary) to determine the limit of earthwork needed to complete this project. Any earthwork quantities that may be shown hereon are preliminary estimates only, and are intended for Soil Erosion Control plan review, if required. There has been no correction made to the earthwork quantities shown hereon due to the compaction of fill.
14. The contractor shall be aware that in the event of discrepancy between scaled and figured dimensions shown on the plan, the figured dimensions shall govern.
15. Sediment erosion control measures shall be installed per sediment erosion control plans, details and specifications.
16. Please refer to Geotechnical Report completed by Triad Engineering, Inc. for load bearing fills, etc.
17. The entire area included within the proposed limits of cut and fill shall be stripped of all root material, trash and other organic and otherwise objectionable, non-complying and unsuitable soils and materials.
18. It shall be distinctly understood that failure to mention specifically any work which would naturally be required to complete the project shall not relieve the contractor of his responsibility to complete such work.
19. All handicapped parking spaces shall be designed, ramped and signed to meet the minimum requirements of the Maryland code for the handicapped.
20. The existing site contours shown hereon are 1' contours and have been field surveyed and checked by FSA in March 2020. (Contour accuracy is to plus or minus one half the contour interval).
21. Limit of disturbed areas are to be the limit of property ownership, unless otherwise noted.
22. Exterior lighting will consist of building mounted lights and pole mounted lights as shown on the photometrics plans and utility plan.
23. The contractor shall provide MOSH safety assistance for Washington County Construction Division, City of Hagerstown Water Department, and Washington County Department of Water Quality Inspectors..
24. This project has a projected start date of November 2021 and a completion date of November 2022.
25. A complete set of approved plans and a copy of the grading permit must be on site and available for use by the inspector, or other representative of Washington County or City of Hagerstown.
26. Proposed SWM will consist of a new filterra.
27. All existing drainage culverts and drainage easements are to be maintained and unaltered.
28. No outdoor storage of materials.
29. All grading for this project shall be the full responsibility of the property owner.
30. The developer/contractor must contact the certifying engineer and the County at least 5 days prior to the start of construction of the stormwater management system to schedule and coordinate inspection timetables.
31. In conformance with the stormwater management ordinance of Washington County, a performance security and executed maintenance agreement shall be required from the developer prior to issuance of any building or grading permit for construction per these plans.
32. No permanent structures (e.g. fences, sheds, play equipment, retaining walls) shall be permitted within any stormwater or storm drainage easement on this property.
33. Retaining walls greater than three (3) feet in height require a building permit.
34. Per AASHTO T180A standards, all proposed stormdrain pipes must be placed on 95% compacted fill.
35. The address shown hereon are based on the existing entrances. If the entrances are constructed at a different location the address for that lot is VOID, and the Owner/Developer of the lot must reapply to the Washington County Department of Planning & Zoning for a new address assignment.

SITE DATA

EXISTING SITE ADDRESS	18717 LONGMEADOW ROAD
TAX MAP - GRID - PARCEL	0024 - 017 - 1152
ELECTION DISTRICT	27
ACCOUNT NUMBER	030475
LIBER / FOLIO	03569/0172
PLAT NUMBER	10470
AREA SUMMARY:	
PARCEL	8.2 AC
LEASE AREA	2.3 AC
DISTURBED AREA	1.2 AC
EXISTING IMPERVIOUS	74,251 SF (1.71 AC)
PROPOSED IMPERVIOUS	74,108 SF (1.70 AC)
BUILDING SUMMARY:	
FOOTPRINT	6,077 SF
HEIGHT	20 FT
EXISTING/PROPOSED USE	CONVENIENCE STORE (GAS STATION)
HOURS OF OPERATION	24 HOURS, 7 DAYS A WEEK
EMPLOYEE SUMMARY	5-6 PER SHIFT
DELIVERS & FREIGHT	TRACTOR TRAILER, BOX TRUCK (DAILY)
WATER & SEWER USAGE:	
WATER PROVIDED	CITY OF HAGERSTOWN WATER DIVISION
SEWER PROVIDED	WASHINGTON COUNTY DEPARTMENT OF WATER QUALITY
SOLID WASTE REMOVAL	PRIVATE HAULER: ROLL OFF TRASH COMPACTOR IN BAY
RECYCLE REMOVAL	PRIVATE HAULER: ROLL OFF TRASH COMPACTOR IN BAY
SITE LIGHTING:	
EXISTING/PROPOSED	POLE & BUILDING MOUNTED
SITE SIGNAGE:	
EXISTING/PROPOSED	PYLON SIGN & BUILDING MOUNTED
FORESTATION:	PREVIOUSLY ADDRESSED PER MISC PLAT 336, 337

ZONING DATA

ZONING DISTRICT	PB - PLANNED BUSINESS DISTRICT
MAXIMUM BUILDING HEIGHT	35 FT
MINIMUM YARD SETBACK:	
FRONT	40 FT.
SIDE	10 FT.
REAR	0 FT.
ROAD	50

PARKING, LOADING & BICYCLE DATA

TOTAL EXISTING SPACES	**40 SPACES**
TOTAL SPACES AFTER RE-DEVELOPMENT	**43 SPACES**

LEGEND

	EXISTING	PROPOSED
SUBJECT BOUNDARY		
BUILDING SETBACK LINE		
RIGHT OF WAY		
EASEMENT LINE		
ADJOINER BOUNDARY		
FENCE (METAL)	X X X	X X X
FENCE (WOODEN)		
DITCH (STREAM)		
EDGE OF WATER		
WETLAND		
FLOODPLAIN		
SOIL BOUNDARY		
RAILWAY		
CENTERLINE		
EDGE OF PAVEMENT		
EDGE OF GRAVEL		
CURB		
WALL		
GUARD RAIL		
EDGE OF CONCRETE		
BUILDING		
MAIL BOX	MB	MB
SIGN (ROAD)		
SIGN (SITE)		
TRAFFIC SIGNAL		
TOPOGRAPHIC FEATURES		
CONTOUR (INDEX)	500	500
CONTOUR (INTERMEDIATE)	501	501
SPOTS ELEVATION	501.65	501.65
VEGETATION AREAS		
TREELINE		
DECIDUOUS TREES		SEE LANDSCAPE SHEET FOR LEGEND
EVERGREEN TREES		SEE LANDSCAPE SHEET FOR LEGEND
SANITARY SEWER		
GRAVITY LINE	SS SS SS	SS SS SS
FORCE MAIN LINE	FM FM FM	FM FM FM
LATERAL		
MANHOLE	SS	SS
CLEANOUT		
VALVE		
WATER		
COLD WATER LINE	W W W W	W W W W
HOT WATER LINE	HW HW HW	HW HW HW
MANHOLE	MH	MH
FIRE HYDRANT		
VALVE		
METER	WM	WM
WELL		
STORM DRAINAGE		
STORM SEWER LINE		
ROOF DRAIN LINE		
MANHOLE	SW	
INLETS		
CLEANOUT		
UTILITIES		
GAS LINE	G G G G	G G G G
ELECTRICAL LINE	UGE UGE UGE	UGE UGE UGE
FIBER OPTIC LINE		
COMMUNICATION LINE	COMM	COMM
OVERHEAD LINES	OH OH OH	OH OH OH
MANHOLE	MH	MH
PEDS, BOX, & ETC		
POLE		
LIGHT POLE		
GAS METER	GM	GM
GAS VALVE		

FILTERRA ROUTINE MAINTENANCE GUIDELINES

Contech includes a 1-year maintenance plan with each system purchase. Annual included maintenance consists of a maximum of two scheduled visits. Additional maintenance may be necessary depending on sediment and trash loading (by owner or at additional cost). The start of the maintenance plan begins when the system is activated.

Maintenance are typically held seasonally, the spring visit aims to clean up after winter loads including salts and sands, while the fall visit helps the system by removing excessive leaf litter.

It has been found that in regions which receive between 30-50 inches of annual rainfall, two visits are generally required, regions with less annual rainfall often only require one visit per annum. Varying land uses can affect maintenance frequency, e.g. fast food restaurants require more frequent trash removal. Contributing drainage ares which are subject to new development where in the recommended erosion and sediment control measures have been implemented may require additional maintenance visits.

Some sites may be subjected to extreme sediment or trash loads, requiring more frequent maintenance visits. This is the reason for detailed notes of maintenance actions per unit, helping the supplier and owner predict future maintenance frequencies, reflecting individual site conditions.

Owners must promptly notify maintenance provided of any damage to plants, which constitute an integral part of the bio-retention technology. Owners should also advise other landscape maintenance contractors to leave all maintenance to the suppliers during the first year.

Maintenance Visit Summary:

1. Inspection of Filterra and surround area.
2. Removal of tree grate (where applicable) and erosion control stones.
3. Removal of debris, trash, and mulch.
4. Mulch replacement.
5. Plant health evaluation and pruning or replacement as needed.
6. Clean area around Filterra.
7. Completed paperwork.

MAINTENANCE CHECKLIST

DRAINAGE SYSTEM FAILURE	PROBLEM	CONDITIONS TO CHECK	CONDITION THAT SHOULD EXIST	ACTIONS
INLET	EXCESSIVE SEDIMENT OR TRASH ACCUMULATION	ACCUMULATED SEDIMENTS OR TRASH IMPAIR FREE FLOW OF WATER INTO FILTERRA	INLET SHOULD BE FREE OF OBSTRUCTIONS ALLOWING FREE DISTRIBUTED FLOW OF WATER INTO FILTERRA	SEDIMENTS AND/OR TRASH SHOULD BE REMOVED
MULCH COVER	TRASH AND FLOATABLE DEBRIS ACCUMULATION	EXCESSIVE TRASH AND/OR DEBRIS ACCUMULATION	MINIMAL TRASH OR OTHER DEBRIS ON MULCH COVER	TRASH AND DEBRIS SHOULD BE REMOVED AND MULCH COVER RAKED LEVEL. ENSURE BARK NUGGET MULCH IS NOT USED
MULCH COVER	"PONDING" OF WATER ON MULCH COVER	"PONDING" IN UNIT COULD BE INDICATIVE OF CLOGGING DUE TO EXCESSIVE FINE SEDIMENT ACCUMULATION OR SPILL OF PETROLEUM OILS	STORMWATER SHOULD DRAIN FREELY AND EVENLY THROUGH MULCH COVER	RECOMMEND CONTACT MANUFACTURER AND REPLACE MULCH AS A MINIMUM
VEGETATION	PLANTS NOT GROWING OR IN POOR CONDITION	SOIL/MULCH TOO WET, EVIDENCE OF SPILL. INCORRECT PLANT SELECTION. PEST INFESTATION. VANDALISM TO PLANTS.	PLANTS SHOULD BE HEALTHY AND PEST FREE	CONTACT MANUFACTURER FOR ADVICE
VEGETATION	PLANT GROWTH EXCESSIVE	PLANTS SHOULD BE APPROPRIATE TO THE SPECIES AND LOCATION FILTERRA		TRIM/PRUNE PLANTS IN ACCORDANCE WITH TYPICAL LANDSCAPING AND SAFETY NEEDS
STRUCTURE	STRUCTURE HAS VISIBLE CRACKS	CRACKS WIDER THAN $\frac{1}{2}$ INCH OR EVIDENCE OF SOIL PARTICLES ENTERING THE STRUCTURE THROUGH THE CRACKS.		VAULT SHOULD BE REPAIRED

Notice of Required Stormwater Management Inspections
Filterra Inlets

The following inspections are required to be performed by the Qualified Professional for the construction of any installation of any Filterra Unit. Additional inspections may be needed based on professional engineering judgment. Each inspection is required at the start of each stage.

Inspection Item		Filterra #1
Delivery of Filterra - Inspection of the Filterra unit & all parts contained in or shipped outside of the unit shall be inspected at the time of delivery. Any nonconformance to approved drawings or damage to any part of the system shall be documented on the Filterra shipping ticket. Damage to the unit during & after unloading shall be corrected at the expense of the contractor.	**Certifying Engineer**	
	Date	
	County Inspector	
	Date	
Setting of Filterra - Unload the Filterra box and set into the prepared hole with appropriate compacted subgrade with a minimum of six inches of gravel.	**Certifying Engineer**	
	Date	
	County Inspector	
	Date	
Connection of Pipes - Before placement of backfill inspection to ensure all pipe connections are completed.	**Certifying Engineer**	
	Date	
	County Inspector	
	Date	
Stabilization and Landscaping - Verify site top soiled, seeded and mulched. Verify installation location, size, material type of fencing or other safety barriers.	**Certifying Engineer**	
	Date	
	County Inspector	
	Date	
Activation - Activation is performed ONLY by authorized personal. Activation can occur once the project site is fully stabilized.	**Certifying Engineer**	
	Date	
	County Inspector	
	Date	

The Qualified Professional may request the presence of a County Construction Standards Inspector at least 24 hours in advance by calling 240-313-2400.

LEGEND - ABBREVIATIONS

AASHTO	AMERICAN ASSOCIATION OF STATE HIGHWAY AND TRANSPORTATION OFFICIALS
ADS	ADVANCED DRAINAGE SYSTEM
ASTM	AMERICAN SOCIETY FOR TESTING AND MATERIAL
AWWA	AMERICAN WATER WORKS ASSOCIATION
BLDG	BUILDING
BOT	BOTTOM
CIP	CAST IRON PIPE
CL	CENTERLINE
CMP	CORRUGATED METAL PIPE
CO	SANITARY SEWER CLEAN-OUT
COMM	COMMUNICATION
CONC	CONCRETE
DA	DRAINAGE AREA
DIA	DIAMETER
EGL	EXISTING GRADE LINE
EX	EXISTING
EIP	EXISTING IRON PIN
FFE	FINISH FLOOR ELEVATION
FH	FIRE HYDRANT
GV	GATE VALVE
HGL	HYDRAULIC GRADE LINE
HDPE	HIGH DENSITY POLYETHYLENE
INV	INVERT
LF	LINEAR FEET
MAX	MAXIMUM
MB	MAIL BOX
MIN	MINIMUM
MJ	MECHANICAL JOINT
NO	NUMBER
NIC	NOT IN CONTRACT
NTS	NOT TO SCALE
OAC	OR APPROVED EQUAL
OC	ON CENTER
PC	POINT OF CURVE
PCC	POINT OF COMPOUND CURVE
PGL	PROPOSED GRADE LINE
PRC	POINT OF REVERSE CURVE
PT	POINT OF TANGENT
PVC	POINT OF VERTICAL CURVE
PVI	POINT OF VERTICAL INTERSECTION
PVT	POINT OF VERTICAL TANGENT
ROW	RIGHT-OF-WAY
SAN	SANITARY
SCE	STABILIZED CONSTRUCTION ENTRANCE
SDR	STANDARD DIMENSION RATIO
SIP	SET IRON PIN
SD	STORM DRAINAGE
SDMH	STORM DRAIN MANHOLE
SF	SQUARE FEET
SS	SANITARY SEWER
SSMH	SANITARY SEWER MANHOLE
STA	STATION
STD	STANDARD
SY	SQUARE YARDS
TAN	TYPE AS NOTED
TEMP	TEMPORARY
TS	TOP OF STRUCTURE
TG	TOP OF GRATE
TR	TOP OF RIM
TYP	TYPICAL
U/P	UTILITY POLE
VIF	VERIFY IN FIELD
WL	WATERLINE
WM	WATER METER
WV	WATER VALVE

STATE OF MARYLAND – KEITH DAVID MOORE – No. 20945 – REGISTERED PROFESSIONAL ENGINEER
01/24/2022

Professional Certification:
I hereby certify that these documents were prepared or approved by me, and that I am a duly licensed professional under the laws of the State of: MARYLAND, License # 20945, Expiration Date 08-23-2023.

FSA
FREDERICK, SEIBERT & ASSOCIATES, INC. ©2021
CIVIL ENGINEERS • SURVEYORS • LANDSCAPE ARCHITECTS • LAND PLANNERS
fsa-inc.com
128 SOUTH POTOMAC STREET, HAGERSTOWN, MD 21740, 301.791.3650
20 WEST BALTIMORE STREET, GREENCASTLE, PA 17225, 717.597.1007
505 SOUTH HANOVER STREET, CARLISLE, PA 17013, 717.701.8111
5201 SPRING ROAD, SHERMANS DALE, PA 17090, 717.567.3680

MARK:	DATE:	DESCRIPTION:

SHEETZ #145 - HAGERSTOWN

SITUATED AT 18717 LONGMEADOW ROAD
WASHINGTON COUNTY, MARYLAND
SHEETZ INC.
351 SHEETZ WAY CLAYSBURG, PA 16625

PROJECT NO.	7989.0
DWN BY: BRADY BLAIR	DATE: 10-06-2021
PROJECT MANAGER: DAVID TROSTLE	EMAIL: dave@fsa-md.com
TAX MAP - GRID - PARCEL	
SCALE	AS SHOWN
SHEET TITLE	NOTES & LEGENDS

C-002
SHEET 02 OF 12

SP-21-031

P:\SHARED FOLDERS\PROJECTS\7989\7989.1\DWG\SITE PLAN\02 - NOTES & LEGENDS.DWG 1/24/2022

CURVE	RADIUS	ARC LENGTH	CHORD LENGTH	CHORD BEARING	DELTA ANGLE
C1	83.39'	130.57'	117.63'	N 40°58'39" E	89°42'41"
C2	583.00'	96.87'	95.78'	S 84°51'15" E	9°25'18"
C3	583.00'	1.99'	1.99'	S 89°39'46" E	0°11'43"
C4	570.00'	70.49'	70.44'	S 86°13'02" E	7°05'08"

LINE	BEARING	DISTANCE
L1	N 03°46'48" W	8.19'
L2	N 86°07'19" E	7.00'
L3	N 16°15'13" E	1.91'

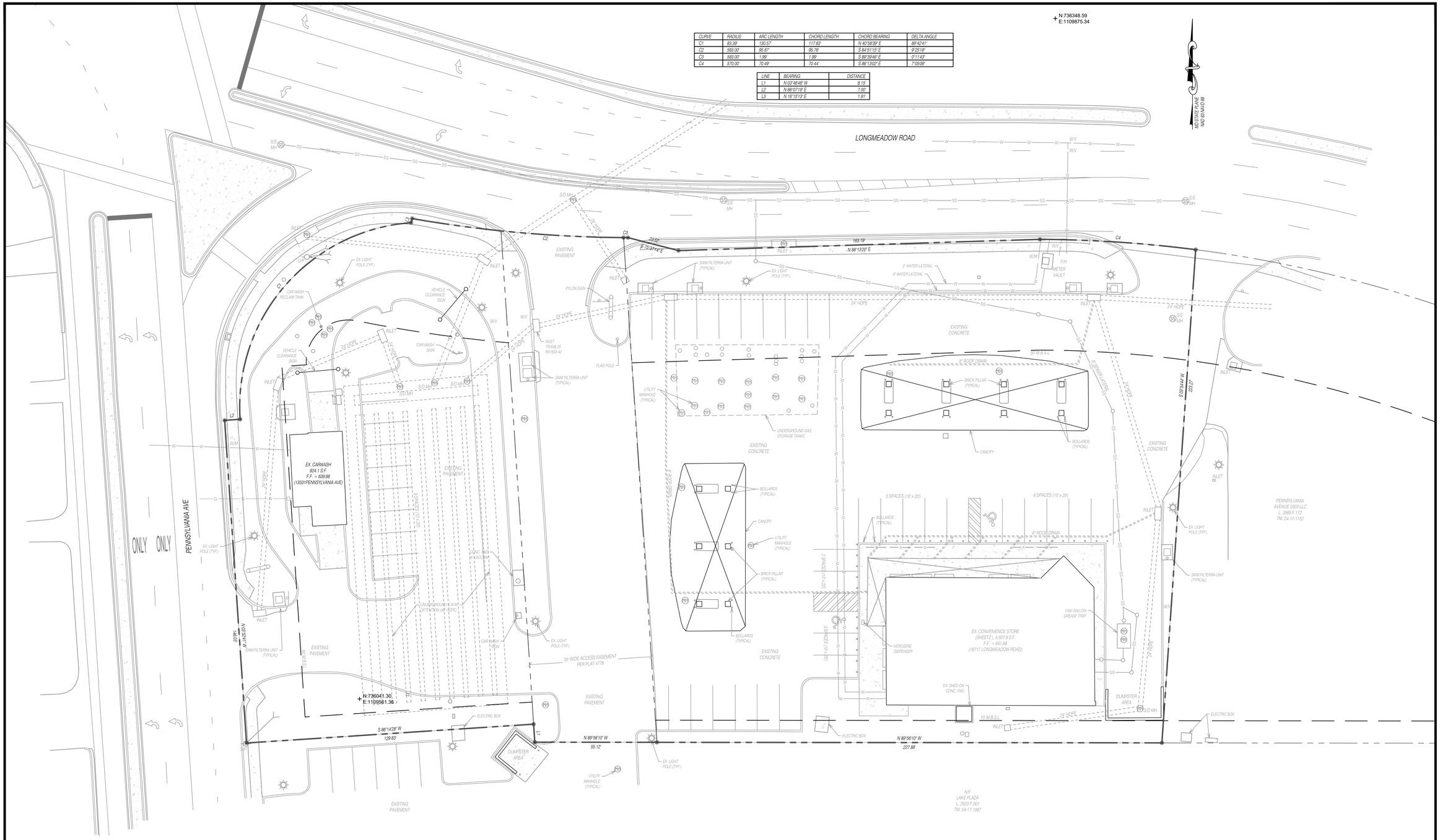

STATE OF MARYLAND
DAVID J. TROSTLE
20945
REGISTERED PROFESSIONAL ENGINEER
01/24/2022

Professional Certification:
I hereby certify that these documents were prepared or approved by me, and that I am a duly licensed professional under the laws of the State of: MARYLAND License #: 20945
Expiration Date 06-23-2023

FSA
FREDERICK, SEIBERT & ASSOCIATES, INC.
CIVIL ENGINEERS • SURVEYORS • LANDSCAPE ARCHITECTS • LAND PLANNERS
fsa-inc.com ©2021
128 SOUTH POTOMAC STREET HAGERSTOWN, MD 21740 301-739-8866
20 WEST BALTIMORE STREET GREENCASTLE, PA 17225 717-267-1907
555 SOUTH HANOVER STREET CARLISLE, PA 17013 717-249-0211
5201 SPRING ROAD SHERMANS DALE, PA 17090 717-582-8866

MARK	DESCRIPTION	DATE

SHEETZ #145 - HAGERSTOWN

SITUATED AT 18717 LONGMEADOW ROAD
WASHINGTON COUNTY, MARYLAND
SHEETZ,INC.
351 SHEETZ WAY CLAYSBURG, PA 16625

PROJECT NO.	7989.0
DWN BY: DUSTIN HORST	DATE: 10-06-2021
PROJECT MANAGER: DAVID TROSTLE	EMAIL: dave@fsa-md.com
TAX MAP - GRID - PARCEL	
SCALE	1"=20'

SHEET TITLE

EXISTING CONDITIONS

C-101
SHEET 03 OF 12

SP-21-031

CURVE	RADIUS	ARC LENGTH	CHORD LENGTH	CHORD BEARING	DELTA ANGLE
C1	83.39'	130.57'	117.63'	N 40°58'39" E	89°42'41"
C2	583.00'	95.87'	95.76'	S 84°51'18" E	9°25'18"
C3	583.00'	1.99'	1.99'	S 89°39'46" E	0°11'43"
C4	570.00'	70.49'	70.44'	S 86°13'02" E	7°05'08"

LINE	BEARING	DISTANCE
L1	N 03°46'48" W	8.15'
L2	N 86°07'19" E	7.00'
L3	N 16°15'13" E	1.91'

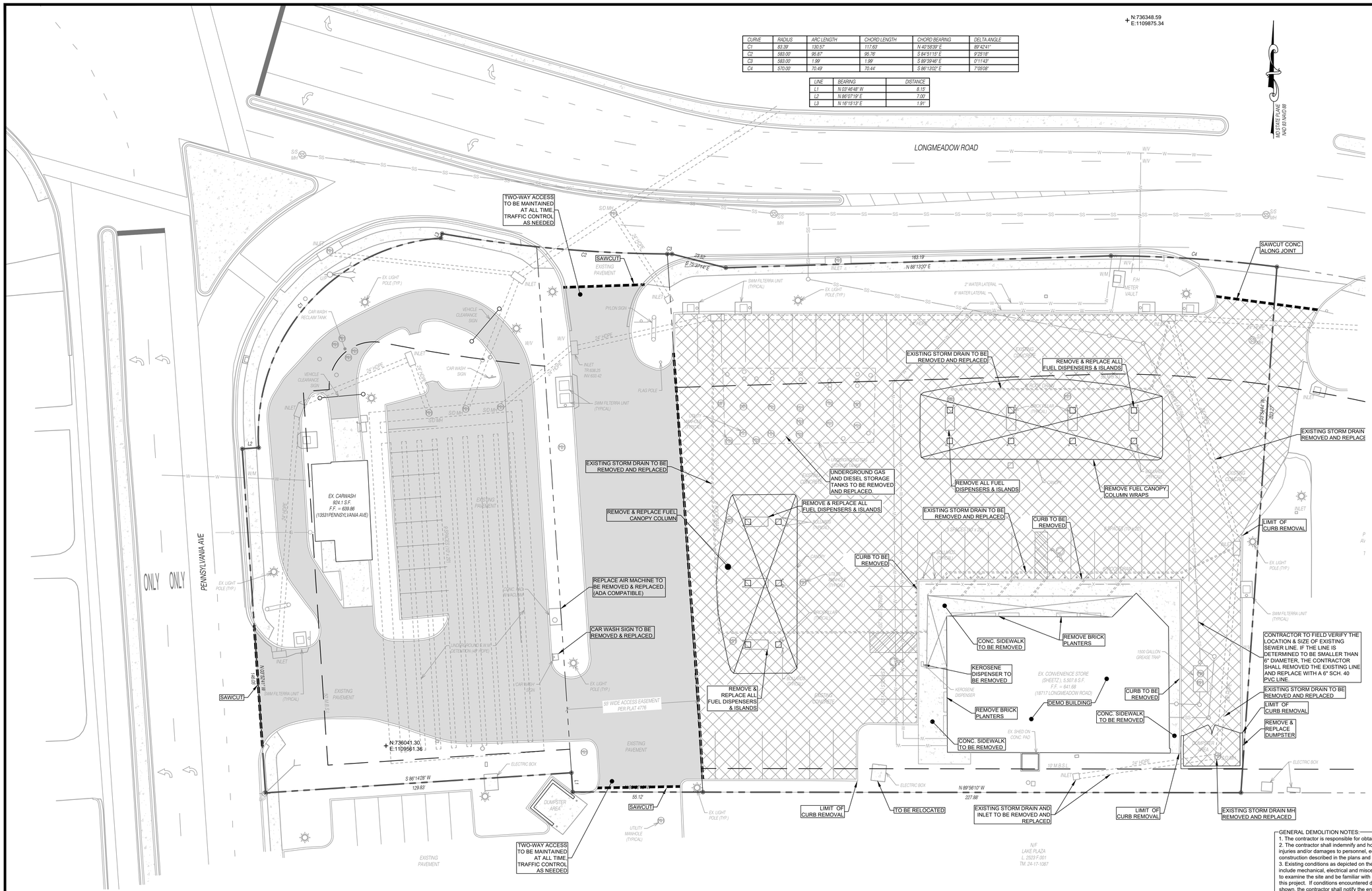

GENERAL DEMOLITION NOTES:

1. The contractor is responsible for obtaining all local and state permits required for demolition work.
2. The contractor shall indemnify and hold harmless the owner and/or engineer for any and all injuries and/or damages to personnel, equipment and/or existing facilities in the demolition and construction described in the plans and specifications.
3. Existing conditions as depicted on these plans are general and illustrative in nature and do not include mechanical, electrical and miscellaneous structures. It is the responsibility of the contractor to examine the site and be familiar with existing conditions prior to bidding on the demolition work for this project. If conditions encountered during examination are significantly different than those shown, the contractor shall notify the engineer immediately.
4. All demolition waste and construction debris shall be removed by the contractor and disposed of in a state approved waste site and in accordance with all local and state codes and permit requirements.
5. All utility removal, relocation, cutting, capping and/or abandonment shall be coordinated with the appropriate utility company.
6. The burning of cleared material and debris shall not be allowed unless contractor gets written authorization from the local authorities.
7. Utility contacts are listed on the title sheet.
8. Erosion and sedimentation control measures around areas of demolition shall be installed prior to initiation of demolition activities. Refer to e&s plan for details.
9. Asbestos or hazardous materials, if found on site, shall be removed by a licensed hazardous materials contractor. Contractor shall notify owner immediately if hazardous materials are encountered.
10. Contractor shall protect all corner pins, monuments, property corners, and benchmarks during demolition activities. If disturbed, contractor shall have disturbed items reset by a licensed surveyor at no additional cost to the owner.
11. Contractor shall adhere to all local, state, federal, and OSHA regulations when operating demolition equipment around utilities.
12. Contractor shall provide and maintain traffic control measures in accordance with the (list highway department)standards, and as required by local agencies when working in and/or along streets, roads, highways, etc. It shall be the contractor's responsibility to obtain approval and coordinate with local and/or state agencies regarding the need, extent, and limitations associated with installing and maintaining traffic control measures.
13. Contractor shall protect at all times adjacent structures and items from damage due to demolition activities.
14. Demolition contractor shall coordinate existing facilities utility disconnects with the Sheetz construction representative a minimum 7 days prior to anticipated demolition of structures.
15. Contractor shall refer to other plans within this construction set for other pertinent information.
16. The site shall be fenced off during the duration of demolition and construction.

GRAPHIC SCALE

20 0 10 20 40 80

(IN FEET)
1 inch = 20 ft.

HATCH LEGEND

EXISTING PAVEMENT TO BE MILLED, 1.5"

EXISTING CONCRETE TO BE REMOVED

STATE OF MARYLAND
RICHARD A. MOORE
No. 25945
REGISTERED PROFESSIONAL ENGINEER
01/24/2022

Professional Certification:
I hereby certify that these documents were prepared or approved by me, and that I am a duly licensed professional under the laws of the State of: MARYLAND License #: 25945
Expiration Date 06-23-2023

FSA
FREDERICK, SEIBERT & ASSOCIATES, INC.
CIVIL ENGINEERS • SURVEYORS • LANDSCAPE ARCHITECTS • LAND PLANNERS
128 SOUTH POTOMAC STREET HAGERSTOWN, MD 21740 301 739-8866
20 WEST BALTIMORE STREET GREENCASTLE, PA 17225 717.267.4097
555 SOUTH HANOVER STREET CARLISLE, PA 17013 717.249.1011
5201 SPRING ROAD SHIPMANSVILLE, PA 17360 717.264.9666
fsa-inc.com

MARK	DESCRIPTION	DATE

SHEETZ #145 - HAGERSTOWN

SITUATED AT 18717 LONGMEADOW ROAD
WASHINGTON COUNTY, MARYLAND
SHEETZ INC.
351 SHEETZ WAY CLAYSBURG, PA 16625

PROJECT NO.	7989.0
DWN BY: DUSTIN HORST	DATE: 10-06-2021
PROJECT MANAGER: DAVID TROSTLE	EMAIL: dave@fsa-md.com
TAX MAP - GRID - PARCEL	
SCALE	1"=20'

SHEET TITLE

DEMOLITION PLAN

C-102
SHEET 04 OF 11

SP-21-031

P:\SHARED FOLDERS\PROJECTS\7989\7989.1 CONCEPTS\7989.1 CONCEPT PLAN.DWG - DEMOLITION PLAN - 12/6/2021

CURVE	RADIUS	ARC LENGTH	CHORD LENGTH	CHORD BEARING	DELTA ANGLE
C1	83.39'	130.57'	117.63'	N 40°58'39" E	89°42'41"
C2	583.00'	95.87'	95.78'	S 84°51'15" E	9°25'18"
C3	583.00'	1.99'	1.99'	S 89°39'46" E	0°11'43"
C4	570.00'	70.49'	70.44'	S 86°13'02" E	7°05'08"

LINE	BEARING	DISTANCE
L1	N 03°46'48" W	8.15'
L2	N 86°07'19" E	7.00'
L3	N 16°15'13" E	1.91'

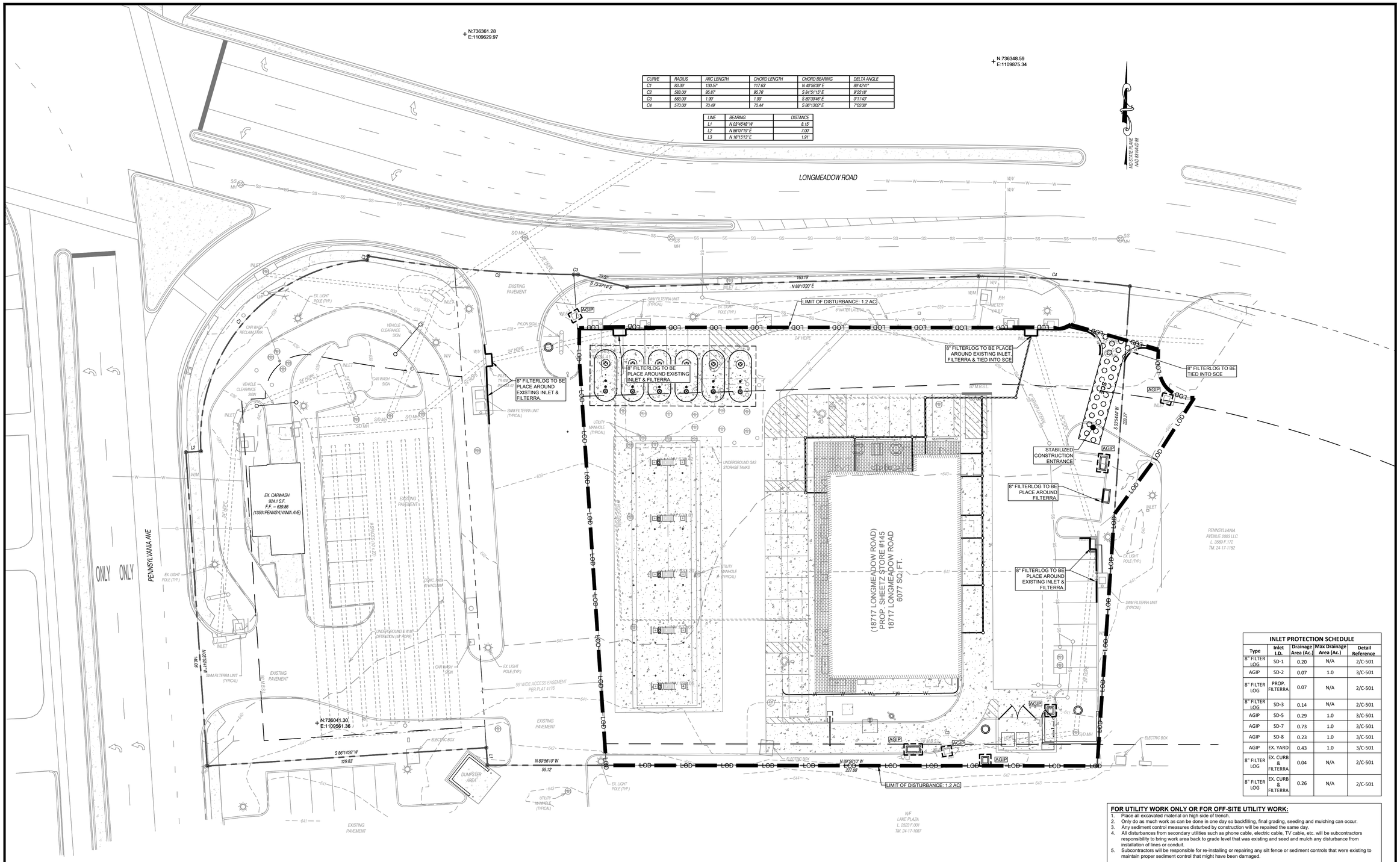

INLET PROTECTION SCHEDULE

Type	Inlet I.D.	Drainage Area (Ac.)	Max Drainage Area (Ac.)	Detail Reference
8" FILTER LOG	SD-1	0.20	N/A	2/C-501
AGIP	SD-2	0.07	1.0	3/C-501
8" FILTER LOG	PROP. FILTERRA	0.07	N/A	2/C-501
8" FILTER LOG	SD-3	0.14	N/A	2/C-501
AGIP	SD-5	0.29	1.0	3/C-501
AGIP	SD-7	0.73	1.0	3/C-501
AGIP	SD-8	0.23	1.0	3/C-501
AGIP	EX. YARD	0.43	1.0	3/C-501
8" FILTER LOG	EX. CURB & FILTERRA	0.04	N/A	2/C-501
8" FILTER LOG	EX. CURB & FILTERRA	0.26	N/A	2/C-501

FOR UTILITY WORK ONLY OR FOR OFF-SITE UTILITY WORK:

1. Place all excavated material on high side of trench.
2. Only do as much work as can be done in one day so backfilling, final grading, seeding and mulching can occur.
3. Any sediment control measures disturbed by construction will be repaired the same day.
4. All disturbances from secondary utilities such as phone cable, electric cable, TV cable, etc. will be subcontractors responsibility to bring work area back to grade level that was existing and seed and mulch any disturbance from installation of lines or conduit.
5. Subcontractors will be responsible for re-installing or repairing any silt fence or sediment controls that were existing to maintain proper sediment control that might have been damaged.

STOCKPILE NOTES:

6. No stockpiling allowed on asphalt.
7. All stockpiles left at the end of the day need to be stabilized until the next redisturbance.

GENERAL EROSION SEDIMENT CONTROL NOTES:

1. Contractor to only open up length of trench that can be constructed and backfilled in one working day in paved areas.
2. Contractor to remove excavated materials to an approved location to waste materials.
3. Contractor to backfill trench with approved materials and stabilize disturbed areas the same working day.
4. If dewatering of the trench is required, contractor to pump water to a filter bag to dewater.
5. Contractor to sweep streets immediately of any debris or sediments caused by construction operations and dispose of at an approved location.
6. Contractor to stabilize all disturbed areas with seed and mulch or appropriate street repair.
7. All slopes 3:1 or greater to be stabilized with temporary matting.
8. Place 4" minimum topsoil in all green areas before permanent seeding is performed. This includes HOA property.
9. The USDA soil survey of Washington County shows the soils on this site as being karst landscape soils. Please be alert to the possibility of sinkhole formation.
10. All sinkholes that are present or develop during construction must be remediated and certified by the site Geotechnical Engineer. Contractor to contact Geotechnical Engineer immediately after the discovery of any sinkhole.

GRAPHIC SCALE

20 0 10 20 40 80

(IN FEET)
1 inch = 20 ft.

STATE OF MARYLAND
DAVID MICHAEL MOORE
20798
REGISTERED PROFESSIONAL ENGINEER
01/24/2022

Professional Certification:
I hereby certify that these documents were prepared or approved by me, and that I am a duly licensed professional under the laws of the State of: MARYLAND License # 20798
Expiration Date 06-23-2023

FSA
FREDERICK, SEIBERT & ASSOCIATES, INC.
CIVIL ENGINEERS • SURVEYORS • LANDSCAPE ARCHITECTS • LAND PLANNERS
128 SOUTH POTOMAC STREET HAGERSTOWN, MD 21740 301 739-8866
20 WEST BALTIMORE STREET GREENCASTLE, PA 17225 717.267.1907
335 SOUTH HANOVER STREET CARLISLE, PA 17013 717.243.1411
5201 SPRING ROAD SHERMANS DALE, PA 17090 717.582.8666
fsa-inc.com
© 2021

MARK	DESCRIPTION	DATE

SHEETZ #145 - HAGERSTOWN

SITUATED AT 18717 LONGMEADOW ROAD
WASHINGTON COUNTY, MARYLAND
SHEETZ INC.
351 SHEETZ WAY CLAYSBURG, PA 16625

PROJECT NO.	7989.0
DWN BY: DUSTIN HORST	DATE: 10-06-2021
PROJECT MANAGER: DAVID TROSTLE	EMAIL: dave@fsa-md.com
TAX MAP - GRID - PARCEL	
SCALE	1"=20'

SHEET TITLE

EROSION & SEDIMENT CONTROL PLAN

C-103
SHEET 05 OF 11

SP-21-031

P:\SHARED FOLDERS\PROJECTS\7989 7989.0 OWNS\SITE PLAN\05 - ESC PLAN.DWG - 12/6/2021

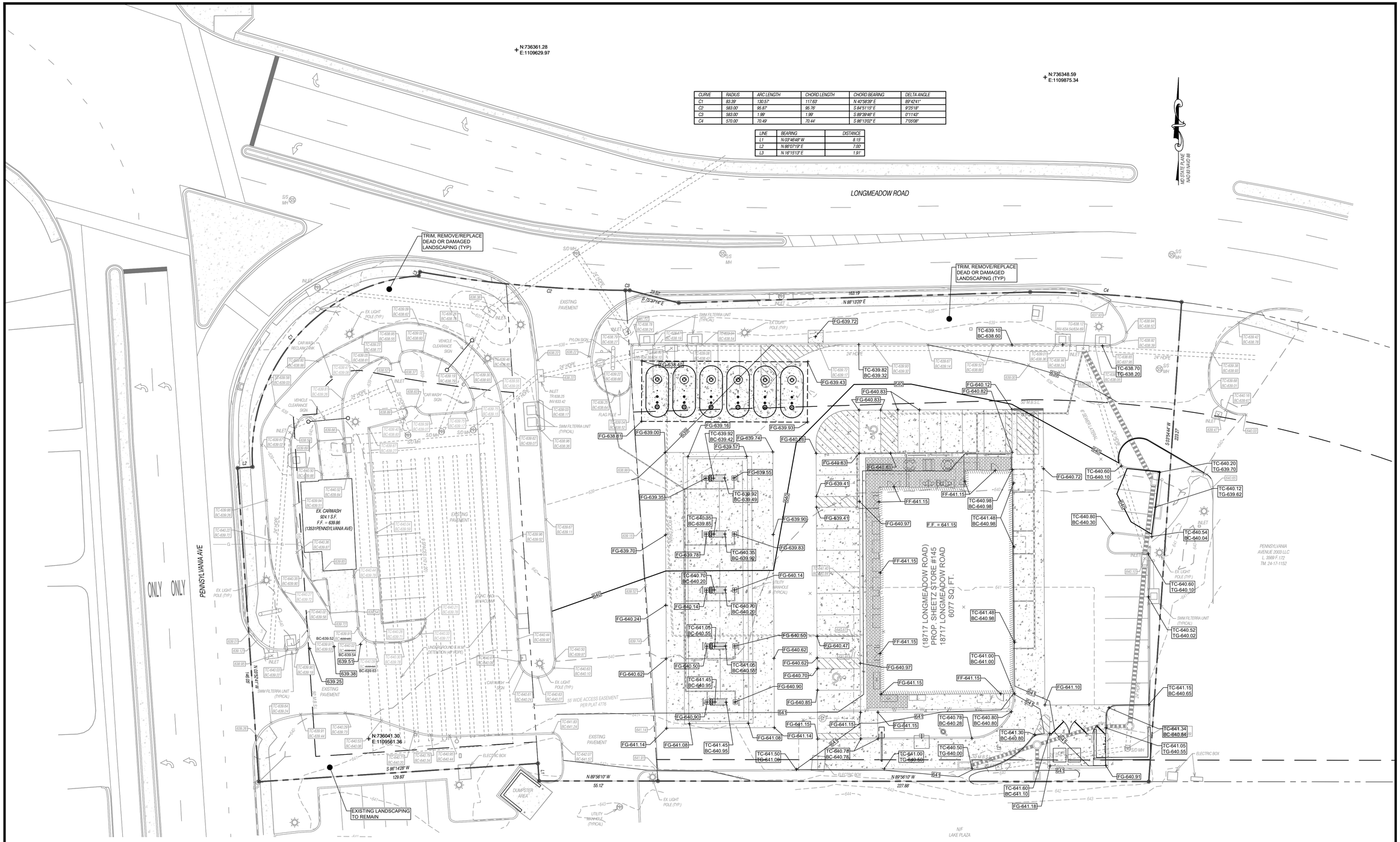

CURVE	RADIUS	ARC LENGTH	CHORD LENGTH	CHORD BEARING	DELTA ANGLE
C1	83.39'	130.57'	117.63'	N 40°58'39" E	89°47'41"
C2	583.00'	95.87'	95.78'	S 84°51'15" E	9°25'18"
C3	583.00'	1.99'	1.99'	S 89°39'46" E	0°11'43"
C4	570.00'	70.49'	70.44'	S 86°13'02" E	7°05'08"

LINE	BEARING	DISTANCE
L1	N 03°46'48" W	8.15'
L2	N 86°07'19" E	7.00'
L3	N 16°15'13" E	1.91'

General Grading Notes:

1. Contractor to only open up length of trench that can be constructed and backfilled in one working day in paved areas.
2. Contractor to remove excavated materials to an approved location to waste materials.
3. All fill brought to the site must come from a location with an approved and current sediment erosion control plan.
4. Contractor to backfill trench with approved materials and stabilize disturbed areas the same working day.
5. If dewatering of the trench is required, contractor to pump water to a filter bag to dewater.
6. Contractor to sweep streets immediately of any debris or sediments caused by construction operations and dispose of at an approved location.
7. Contractor to stabilize all disturbed areas with seed and mulch or appropriate street repair.
8. All slopes 3:1 or greater to be stabilized with temporary matting.
9. Place 4" minimum topsoil in all green areas before permanent seeding is performed. This includes HOA property.
10. The USDA soil survey of Washington County shows the soils on this site as being karst landscape soils. Please be alert to the possibility of sinkhole formation.
11. All sinkholes that are present or develop during construction must be remediated and certified by the site Geotechnical Engineer. Contractor to contact Geotechnical Engineer immediately after the discovery of any sinkhole.

GRAPHIC SCALE

20 0 10 20 40 80

(IN FEET)
1 inch = 20 ft.

Subgrade Preparation:

Prior to the construction of foundations, floor slabs, or pavements, or the placement of fill in any structural or pavement areas, all organic materials, frozen, wet, soft or loose soils, and other deleterious materials should be removed and wasted. If rock is encountered in the subgrade, remove an additional 6 inches below subgrade and backfill with compacted CR-6 crushed stone cushion.

After the subgrade in cuts and fills has been finally shaped to the specified cross section, it shall be carefully and thoroughly proof rolled with a 20 ton roller or equivalent to determine soft or unsuitable areas. Prior to paving soft or unsuitable areas shall be removed and backfilled with suitable material to the specified density. (Over-excavation to be monitored and approved by owner's geotechnical engineer prior to removal).

Fill in structural and pavement areas should be placed in lifts which are eight inches or less in loose thickness. Material 1 ft. below the top of subgrade shall be compacted to not less than 92% of the maximum dry density as specified in T 180. Material in the top 1 ft. shall be compacted to not less than 97% of the maximum dry density. In building areas, the fill should extend a minimum of ten feet beyond building lines where floor slabs are constructed on fill.

Notes:

- All proposed storm drain pipes must be placed on 95% compacted fill according to AASHTO T180A standards.
- Due to karst soils on the site, there is increased risk of sinkhole development within the swm facility. if encountered, contact a Geotechnical Engineer to prepare remediation plan.

STATE OF MARYLAND
DAVID MICHAEL MOORE
No. 20245
REGISTERED PROFESSIONAL ENGINEER
01/24/2022

Professional Certification:
I hereby certify that these documents were prepared or approved by me, and that I am a duly licensed professional under the laws of the State of: MARYLAND License #: 20245
Expiration Date: 06-23-2023

FSA
FREDERICK, SEIBERT & ASSOCIATES, INC.
CIVIL ENGINEERS • SURVEYORS • LANDSCAPE ARCHITECTS • LAND PLANNERS
128 SOUTH POTOMAC STREET HAGERSTOWN, MD 21740 301 739-8866
20 WEST BALTIMORE STREET GREENCASTLE, PA 17225 717.261.1807
335 SOUTH HANOVER STREET CARLISLE, PA 17013 717.243.1411
5201 SPRING ROAD SHERMANS DALE, PA 17090 717.582.8866
fsa-inc.com ©2021

MARK	DESCRIPTION	DATE

SHEETZ #145 - HAGERSTOWN

SITUATED AT 18717 LONGMEADOW ROAD
WASHINGTON COUNTY, MARYLAND
SHEETZ, INC.
351 SHEETZ WAY CLAYSBURG, PA 16625

PROJECT NO.	7989.0
DWN BY: DUSTIN HORST	DATE: 10-06-21
PROJECT MANAGER: DAVID TROSTLE	EMAIL: dave@fsa-md.com
TAX MAP - GRID - PARCEL	
SCALE	1"=20'

SHEET TITLE

GRADING PLAN

C-104

SHEET 06 OF 11

SP-21-031

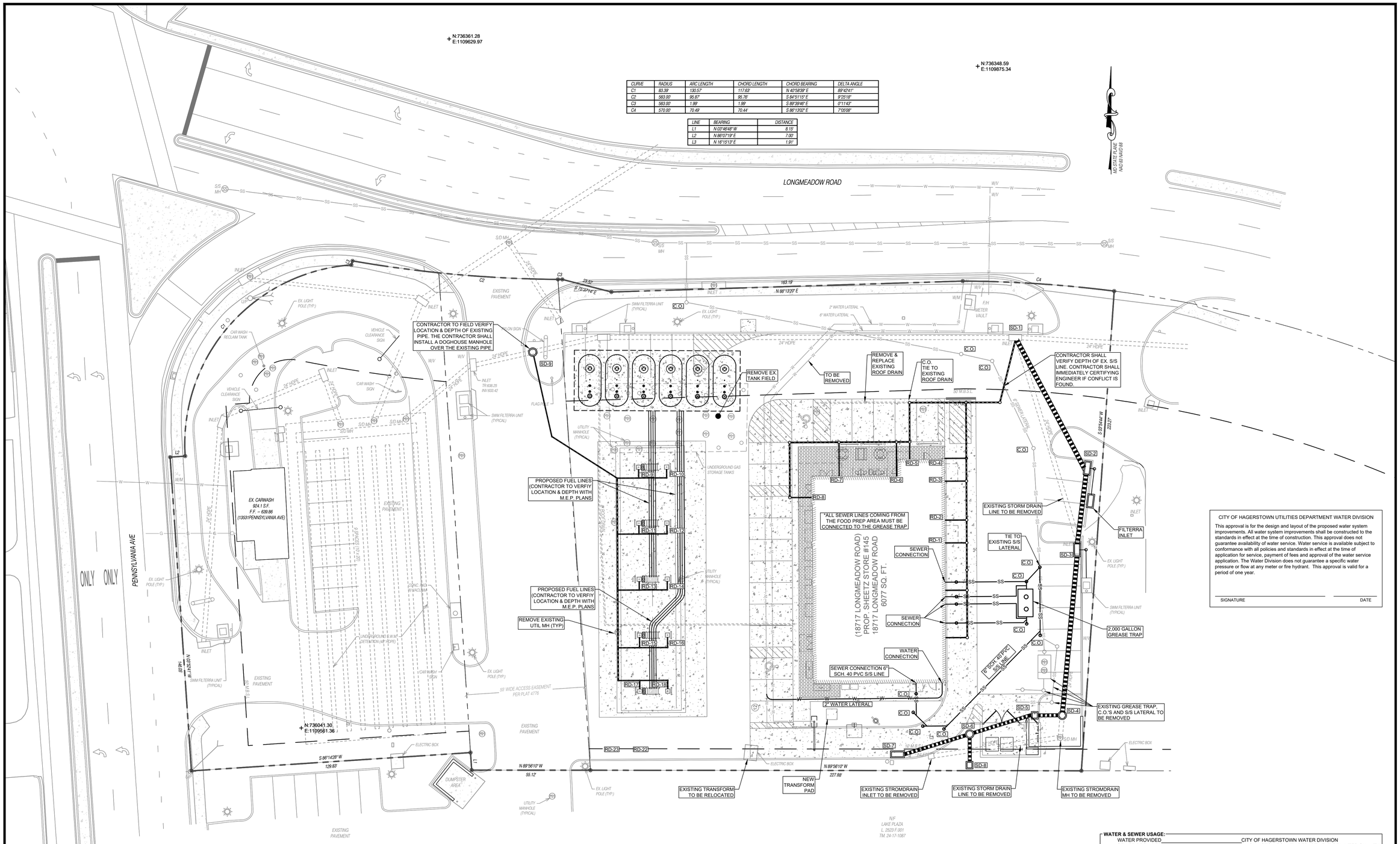

CURVE	RADIUS	ARC LENGTH	CHORD LENGTH	CHORD BEARING	DELTA ANGLE
C1	83.39'	130.5'	117.63'	N 40°58'39" E	89°42'41"
C2	583.00'	95.87'	95.76'	S 84°51'15" E	9°25'18"
C3	583.00'	1.99'	1.99'	S 89°39'46" E	0°11'43"
C4	570.00'	70.49'	70.44'	S 86°13'02" E	7°05'08"

LINE	BEARING	DISTANCE
L1	N 03°46'48" W	8.15'
L2	N 86°07'19" E	7.00'
L3	N 16°15'13" E	1.91'

STORMDRAIN SCEDULE

NAME	RIM ELEV(FT)	INVERT-IN ELEV(FT)	INVERT-IN ELEV(FT)	INVERT-OUT ELEV(FT)	INLET ID
SD-1	638.12	634.64	N/A	N/A	EXISTING INLET
SD-2	639.70	635.42	N/A	635.32	MD SHA DOUBLE "S"
SD-3	640.10	635.69	N/A	635.59	MD SHA DOUBLE "S"
SD-4	641.00	636.17	N/A	636.07	48" PRECAST MH
SD-5	640.55	636.31	N/A	636.21	MDSHA SINGLE "S"
SD-6	641.00	636.54	636.54	636.44	48" PRECAST MH
SD-7	641.00	N/A	N/A	636.69	MD SHA DOUBLE "S"
SD-8	640.50	N/A	N/A	636.57	MD SHA SINGLE "S"
SD-9	639.00	634.02	634.02	633.92	48" DOGHOUSE MH

GRAPHIC SCALE

20 0 10 20 40 80

(IN FEET)
1 inch = 20 ft.

WATER & SEWER USAGE:

WATER PROVIDED	CITY OF HAGERSTOWN WATER DIVISION
SEWER PROVIDED	WASHINGTON COUNTY DEPARTMENT OF WATER QUALITY
EXISTING ALLOCATION	2,686 GPD
PROPOSED ADDITIONAL WATER ALLOCATION	0 GPD
PROPOSED WASTEWATER ALLOCATION	1,400 GPD*

*WASTEWATER ALLOCATION IS LOWER THAN WATER ALLOCATION DUE TO DEDUCT METER THAT WILL BE INSTALLED ON DRINK SUPPLY LINE.)

UTILITY NOTES:

1. All fittings, bends, and appurtenances shall be installed with proper and required concrete buttresses. All dead end services shall be properly capped and buttressed.
2. All pipe joints shall be left open until water line has been hydrostatically tested
3. All underground water lines are to be installed with a cover of 3.5' below finished grade.
4. All sewer lines to be PVC-SCH 40.
5. The contractor shall verify the location and elevation of existing utilities before starting construction.
6. The Contractor shall supply all bends, fittings and buttresses as required to achieve the horizontal and vertical alignments as shown on the plans. Bends and fittings may not be shown on the plan and profile but are to be included in the Contractor's cost and their exact location is at the option of the Contractor to achieve the horizontal layout shown hereon.
7. Contractor to verify with utility companies that proposed sediment erosion control measures are located so as to avoid conflicts with their proposed utility installation before placement of sediment erosion control measures.
8. All manholes not located within a paved surface must be set 6" above the surrounding grade.

CITY OF HAGERSTOWN UTILITIES DEPARTMENT WATER DIVISION

This approval is for the design and layout of the proposed water system improvements. All water system improvements shall be constructed to the standards in effect at the time of construction. This approval does not guarantee availability of water service. Water service is available subject to conformance with all policies and standards in effect at the time of application for service, payment of fees and approval of the water service application. The Water Division does not guarantee a specific water pressure or flow at any meter or fire hydrant. This approval is valid for a period of one year.

SIGNATURE DATE

STATE OF MARYLAND
DAVID MICHAEL TROSTLE
20985
REGISTERED PROFESSIONAL ENGINEER
01/24/2022

Professional Certification:
I hereby certify that these documents were prepared or approved by me, and that I am a duly licensed professional under the laws of the State of: MARYLAND License #: 20985
Expiration Date 06-23-2021

FSA
FREDERICK, SEIBERT & ASSOCIATES, INC.
CIVIL ENGINEERS • SURVEYORS • LANDSCAPE ARCHITECTS • LAND PLANNERS
128 SOUTH POTOMAC STREET HAGERSTOWN, MD 21740 301 739-8866
20 WEST BALTIMORE STREET GREENCASTLE, PA 17225 717.263.1907
555 SOUTH HANOVER STREET CARLISLE, PA 17013 717.243.1411
5201 SPRING ROAD SHERMANS DALE, PA 17090 717.582.8866
fsa-inc.com ©2021

MARK	DESCRIPTION	DATE

SHEETZ #145 - HAGERSTOWN

SITUATED AT 18717 LONGMEADOW ROAD
WASHINGTON COUNTY, MARYLAND
SHEETZ INC.
351 SHEETZ WAY CLAYSBURG, PA 16625

PROJECT NO. 7989.0
DWN BY DUSTIN HORST | DATE 10-06-2021
PROJECT MANAGER DAVID TROSTLE | EMAIL dave@fsa-md.com
TAX MAP - GRID - PARCEL
SCALE 1"=20'
SHEET TITLE

UTILITY PLAN

C-105
SHEET 07 OF 11

SP-21-031

P:\SHARED FILES\PROFILES\7989\7989.0 SHEETZ\SET PLAN\07 - UTILITY PLAN.DWG 1/24/2022

CURVE	RADIUS	ARC LENGTH	CHORD LENGTH	CHORD BEARING	DELTA ANGLE
C1	83.39'	130.5'	117.63'	N 40°58'39" E	89°42'41"
C2	583.00'	95.87'	95.76'	S 84°51'15" E	9°25'18"
C3	583.00'	1.99'	1.99'	S 89°39'46" E	0°11'43"
C4	570.00'	70.49'	70.44'	S 86°13'02" E	7°05'08"

LINE	BEARING	DISTANCE
L1	N 03°46'48" W	8.15'
L2	N 86°07'19" E	7.00'
L3	N 16°15'18" E	1.91'

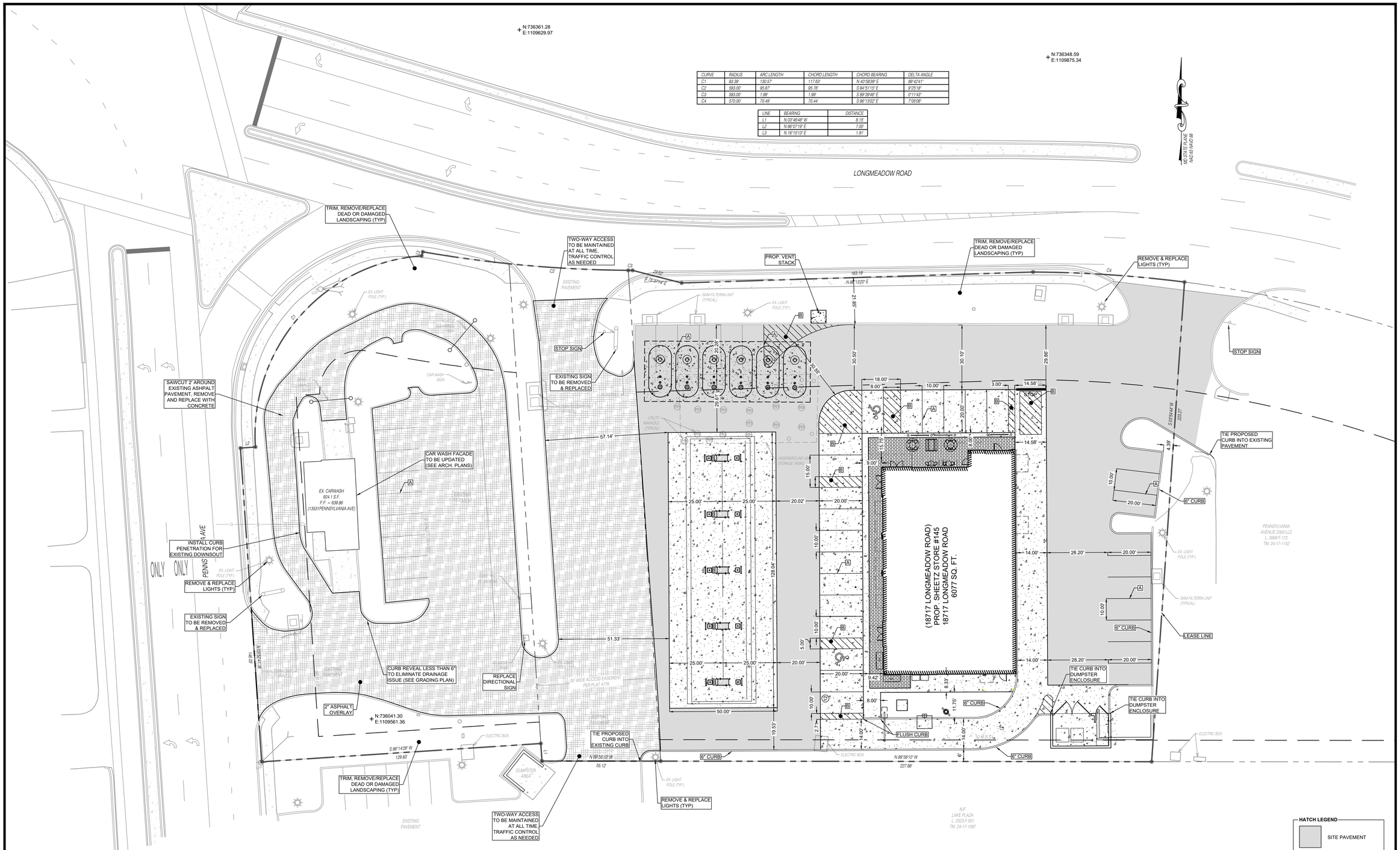

HATCH LEGEND

- SITE PAVEMENT
- 2" MILL & OVERLAY
- PROPOSED CONCRETE PAVEMENT
- PROPOSED BRICK PAVER SIDEWALK

STRIPING LEGEND

- A — 4" SOLID WHITE LINE
- B — 45° GORE HATCH

GRAPHIC SCALE

20 0 10 20 40 80

(IN FEET)
1 inch = 20 ft.

GENERAL SITE PLAN NOTES:

1. Proposed building dimensions shown hereon were provided by Sheetz Inc. Contractor shall see final approved architectural plans for final building layout and dimensions.
2. All handicap spaces and sidewalk shall be constructed to meet ADA criteria.
3. All outdoor equipment locations shown hereon were provided by Sheetz Inc. Contractor shall have final outdoor equipment layout approved by Sheetz Inc. before final installation.
4. Contractor shall see final approved architectural plans for all outdoor equipment specs.

STATE OF MARYLAND — DAVID A. TROSTLE — No. 20945 — REGISTERED PROFESSIONAL ENGINEER

01/24/2022

Professional Certification:
I hereby certify that these documents were prepared or approved by me, and that I am a duly licensed professional under the laws of the State of: MARYLAND License #: 20945
Expiration Date 06-23-2023

FSA
FREDERICK, SEIBERT & ASSOCIATES, INC.
CIVIL ENGINEERS • SURVEYORS • LANDSCAPE ARCHITECTS • LAND PLANNERS
fsa-inc.com ©2021
128 SOUTH POTOMAC STREET HAGERSTOWN, MD 21740 301 739-8866
20 WEST BALTIMORE STREET GREENCASTLE, PA 17225 717-261-1907
305 SOUTH HANOVER STREET CARLISLE, PA 17013 717-243-7411
5201 SPRING ROAD SHERMANS DALE, PA 17090 717-582-8866

MARK	DESCRIPTION	DATE

SHEETZ #145 - HAGERSTOWN

SITUATED AT 18717 LONGMEADOW ROAD
WASHINGTON COUNTY, MARYLAND
SHEETZ INC.
351 SHEETZ WAY CLAYSBURG, PA 16625

PROJECT NO.	7989.0
DWN BY: DUSTIN HORST	DATE: 10-06-2021
PROJECT MANAGER: DAVID TROSTLE	EMAIL: dave@fsa-md.com
TAX MAP - GRID - PARCEL	
SCALE	1"=20'

SHEET TITLE

SITE & DIMENSION PLAN

C-106
SHEET 08 OF 11

SP-21-013

P:\SHARED FOLDERS\PROJECTS\7989\7989.1 CONVISITE FLAVOR - SITE & DIMENSIONING PLAN.DWG 1/24/2022

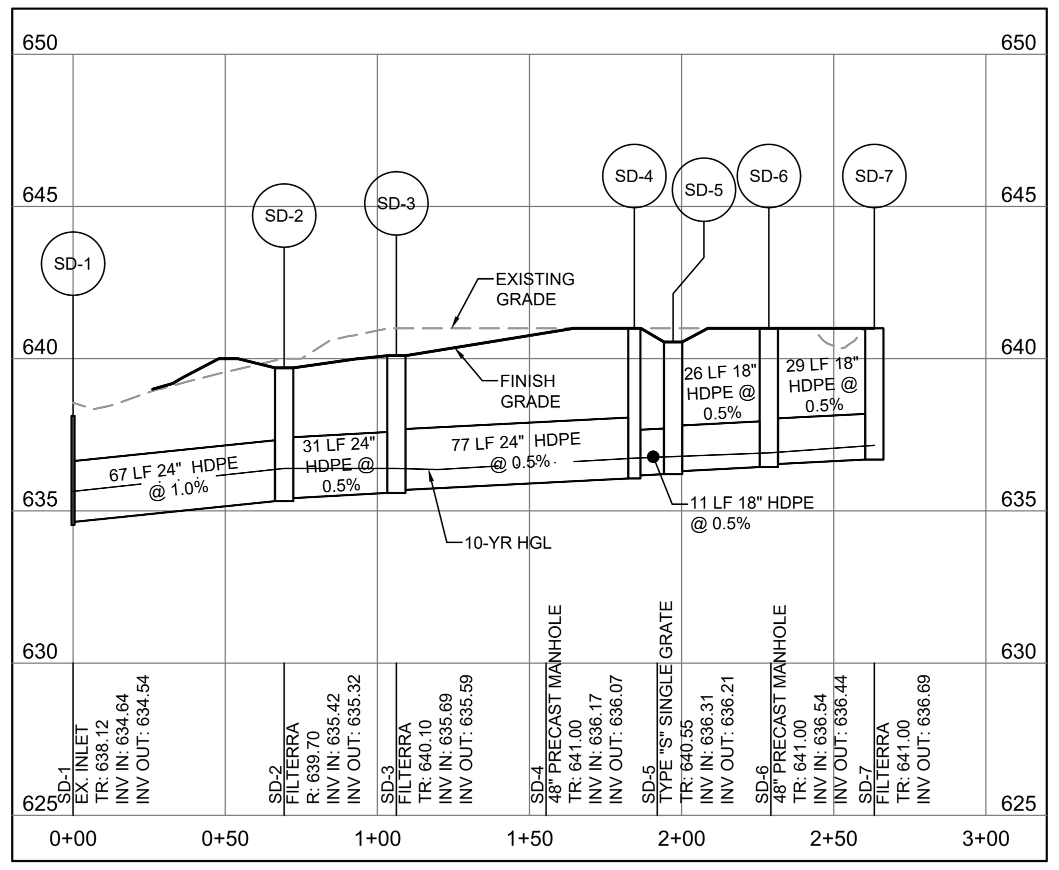

SD-1 TO SD-7 STORM DRAIN PROFILE
SCALE: 1" = 50'

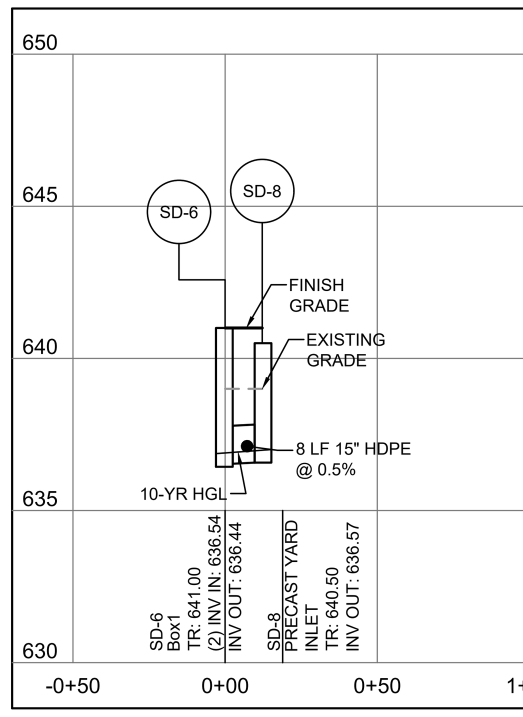

SD-6 TO SD-8 STORM DRAIN PROFILE
SCALE: 1" = 50'

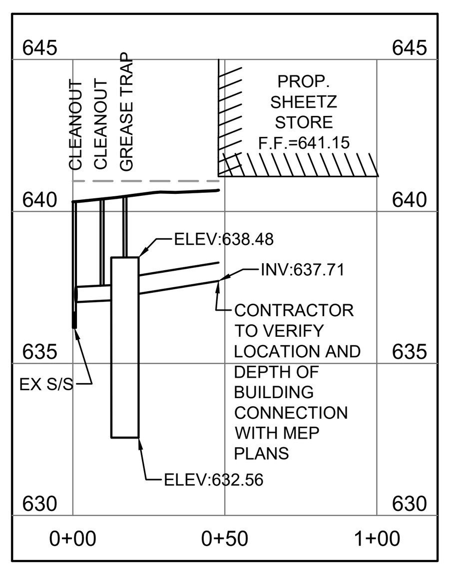

GREASE TRAP PROFILE
SCALE: 1" = 50'

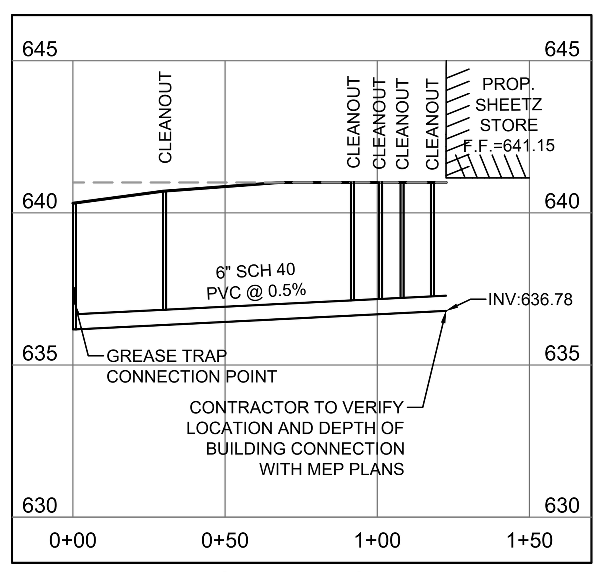

6" SANITARY SEWER PROFILE
SCALE: 1" = 50'

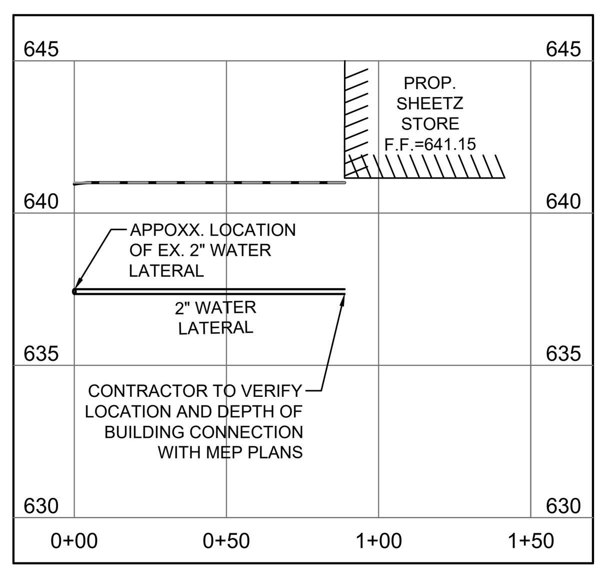

6" SANITARY SEWER PROFILE
SCALE: 1" = 50'

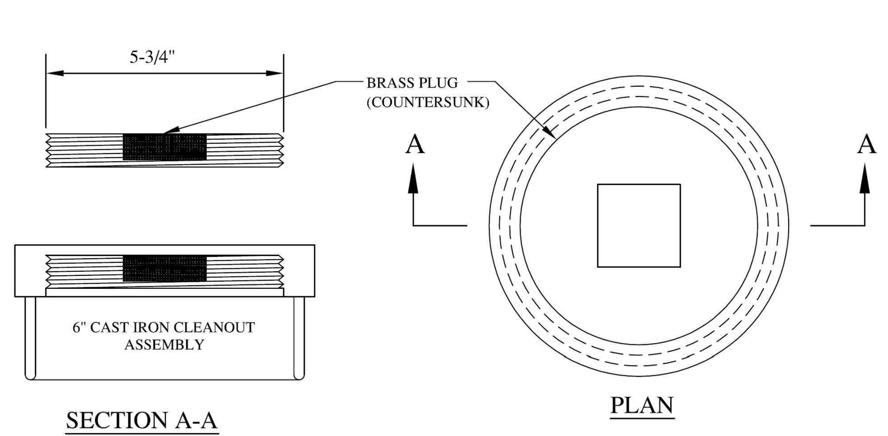

SECTION A-A

PLAN

NOTES:
1. FOR DRIVEWAY, ROADWAY, GRASS STRIP, OR SIDEWALK LOCATIONS, A H-20 TRAFFIC LOADING COVER ASSEMBLY SHALL BE UTILIZED.

2. MEETS ASTM A74-98 AND ASME A112.36
CUT PIPE TO DESIRED LEVEL, LUBE GASKET AND PUSH ON PIPE, TAP WITH LEAD HAMMER TO SEAT, THEN INSTALL BRASS PLUG.

1 / C-401

CLEANOUT DETAIL

ISSUE DATE: MARCH 2009
REVISIONS

DETAIL WW116

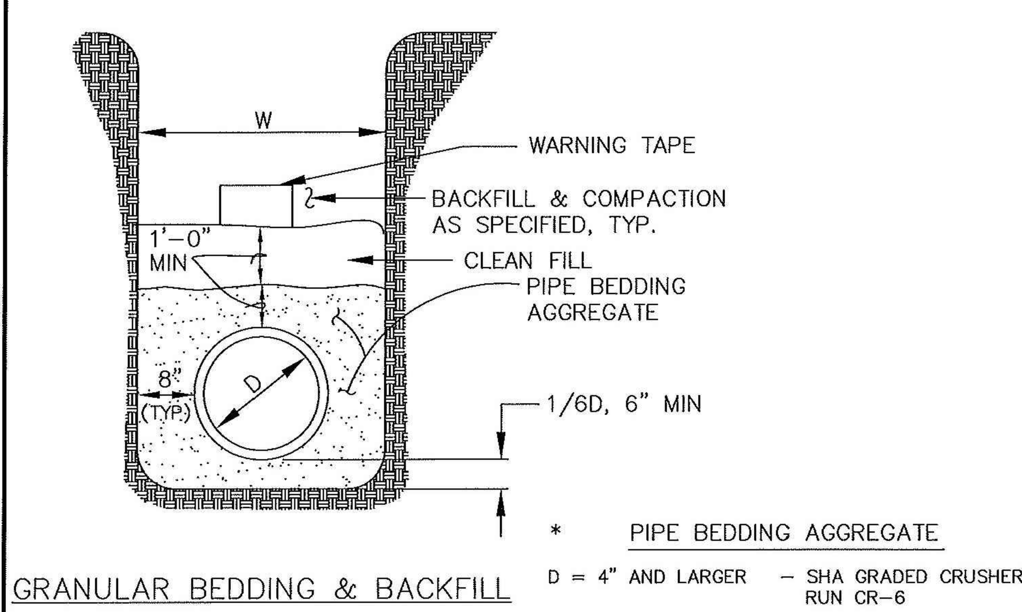

GRANULAR BEDDING & BACKFILL

* PIPE BEDDING AGGREGATE

D = 4" AND LARGER – SHA GRADED CRUSHER RUN CR-6

D = 1-1/2" THROUGH <4" – SHA GRADED B-10

D = LESS THAN 1-1/2" – STONE DUST

* = NOMINAL PIPE DIAMETER (INCHES)

2 / C-401

STANDARD TRENCH WIDTH & STONE BEDDING

Detail SW-1.1

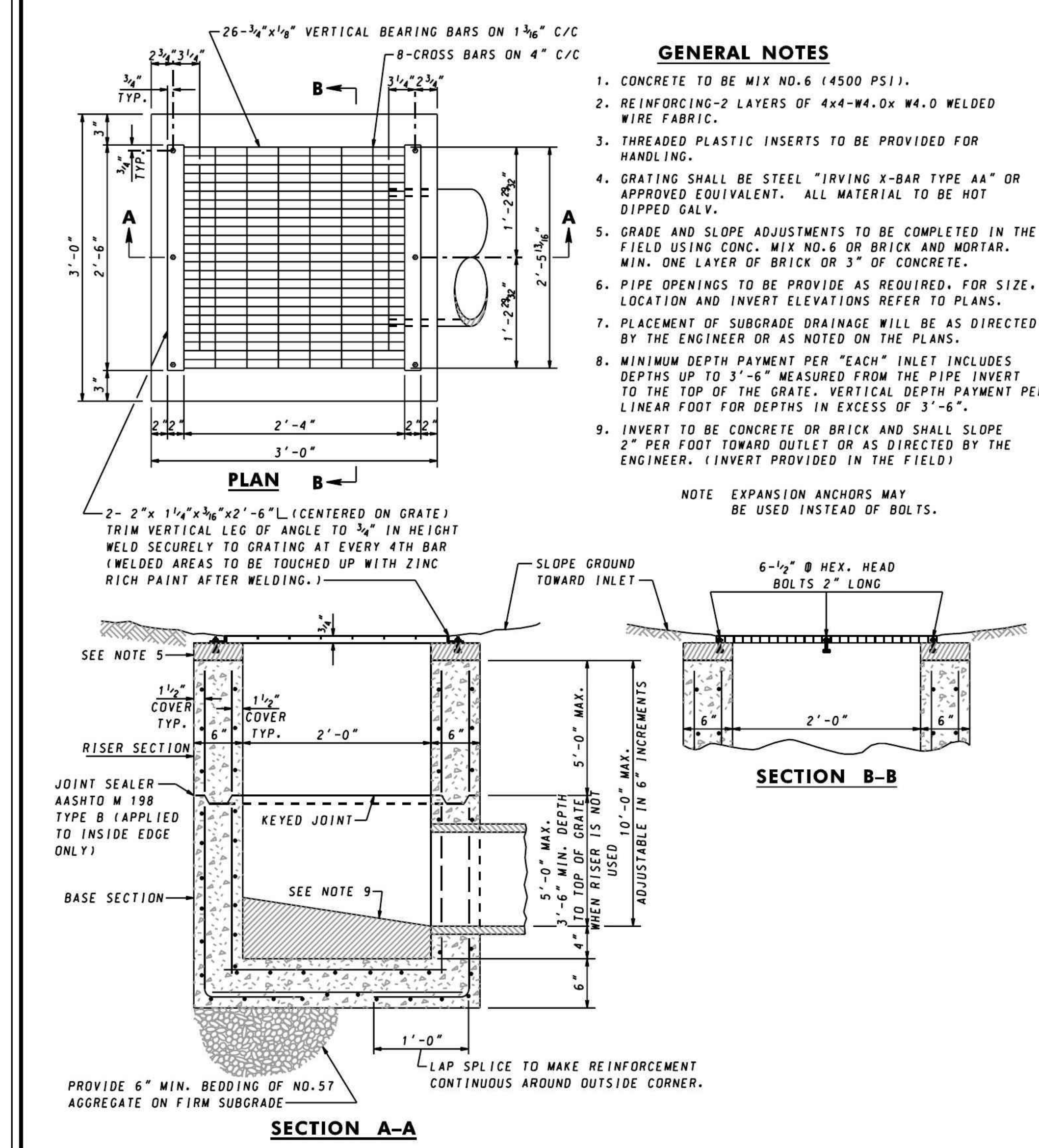

GENERAL NOTES

1. CONCRETE TO BE MIX NO.6 (4500 PSI).
2. REINFORCING-2 LAYERS OF 4x4-W4.0x W4.0 WELDED WIRE FABRIC.
3. THREADED PLASTIC INSERTS TO BE PROVIDED FOR HANDLING.
4. GRATING SHALL BE STEEL "IRVING X-BAR TYPE AA" OR APPROVED EQUIVALENT. ALL MATERIAL TO BE HOT DIPPED GALV.
5. GRADE AND SLOPE ADJUSTMENTS TO BE COMPLETED IN THE FIELD USING CONC. MIX NO.6 OR BRICK AND MORTAR. MIN. ONE LAYER OF BRICK OR 3" OF CONCRETE.
6. PIPE OPENINGS TO BE PROVIDE AS REQUIRED. FOR SIZE, LOCATION AND INVERT ELEVATIONS REFER TO PLANS.
7. PLACEMENT OF SUBGRADE DRAINAGE WILL BE AS DIRECTED BY THE ENGINEER OR AS NOTED ON THE PLANS.
8. MINIMUM DEPTH PAYMENT PER "EACH" INLET INCLUDES DEPTHS UP TO 3'-6" MEASURED FROM THE PIPE INVERT TO THE TOP OF THE GRATE. VERTICAL DEPTH PAYMENT PER LINEAR FOOT FOR DEPTHS IN EXCESS OF 3'-6".
9. INVERT TO BE CONCRETE OR BRICK AND SHALL SLOPE 2" PER FOOT TOWARD OUTLET OR AS DIRECTED BY THE ENGINEER. (INVERT PROVIDED IN THE FIELD)

NOTE EXPANSION ANCHORS MAY BE USED INSTEAD OF BOLTS.

SPECIFICATION 305 | CATEGORY CODE ITEMS
APPROVED — DIRECTOR – OFFICE OF HIGHWAY DEVELOPMENT
APPROVAL • SHA REVISIONS: APPROVAL 4-5-87; REVISED 10-1-01
APPROVAL • FEDERAL HIGHWAY ADMINISTRATION: APPROVAL 6-23-87

Maryland Department of Transportation
STATE HIGHWAY ADMINISTRATION
STANDARDS FOR HIGHWAYS AND INCIDENTAL STRUCTURES

PRECAST YARD INLET — 3 / C-401

STANDARD NO. MD 381.02

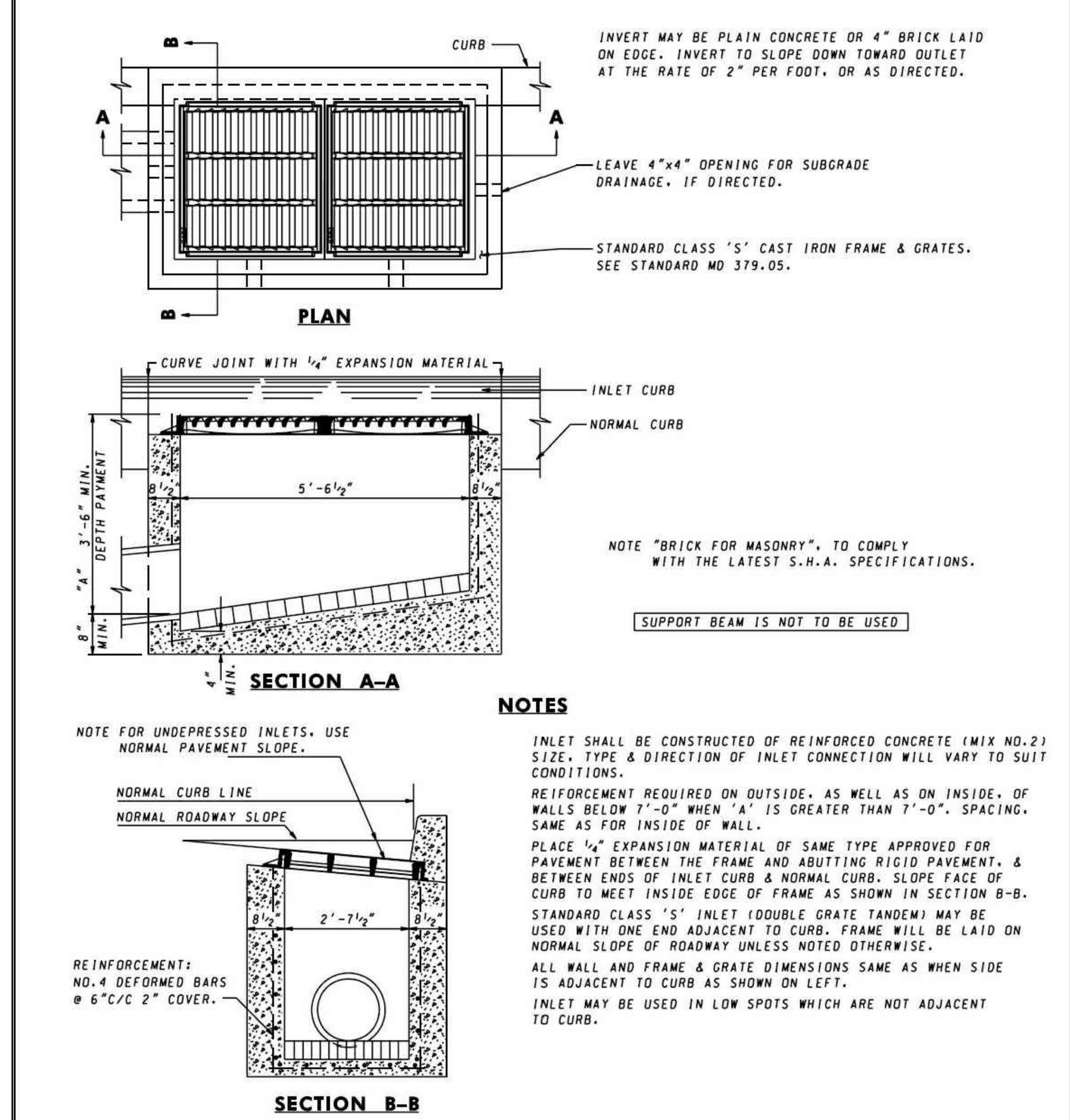

INVERT MAY BE PLAIN CONCRETE OR 4" BRICK LAID ON EDGE. INVERT TO SLOPE DOWN TOWARD OUTLET AT THE RATE OF 2" PER FOOT, OR AS DIRECTED.

NOTE "BRICK FOR MASONRY", TO COMPLY WITH THE LATEST S.H.A. SPECIFICATIONS.

SUPPORT BEAM IS NOT TO BE USED

NOTES

INLET SHALL BE CONSTRUCTED OF REINFORCED CONCRETE (MIX NO.2) SIZE, TYPE & DIRECTION OF INLET CONNECTION WILL VARY TO SUIT CONDITIONS.

REINFORCEMENT REQUIRED ON OUTSIDE, AS WELL AS ON INSIDE, OF WALLS BELOW 7'-0" WHEN 'A' IS GREATER THAN 7'-0". SPACING, SAME AS FOR INSIDE OF WALL.

PLACE 1/4" EXPANSION MATERIAL OF SAME TYPE APPROVED FOR PAVEMENT BETWEEN THE FRAME AND ABUTTING RIGID PAVEMENT, & BETWEEN ENDS OF INLET CURB & NORMAL CURB. SLOPE FACE OF CURB TO MEET INSIDE EDGE OF FRAME AS SHOWN IN SECTION B-B.

STANDARD CLASS 'S' INLET (DOUBLE GRATE TANDEM) MAY BE USED WITH ONE END ADJACENT TO CURB. FRAME WILL BE LAID ON NORMAL SLOPE OF ROADWAY UNLESS NOTED OTHERWISE.

ALL WALL AND FRAME & GRATE DIMENSIONS SAME AS WHEN SIDE IS ADJACENT TO CURB AS SHOWN ON LEFT.

INLET MAY BE USED IN LOW SPOTS WHICH ARE NOT ADJACENT TO CURB.

SPECIFICATION 305 | CATEGORY CODE ITEMS
APPROVED — DIRECTOR – OFFICE OF HIGHWAY DEVELOPMENT
APPROVAL • SHA REVISIONS: APPROVAL 10-30-69; REVISED 10-1-01; REVISED 7-1-09; REVISED 08-03-10
APPROVAL • FEDERAL HIGHWAY ADMINISTRATION: APPROVAL 11-10-69; REVISED 2-24-88; REVISED 7-27-09; REVISED 07-26-10

Maryland Department of Transportation
STATE HIGHWAY ADMINISTRATION
STANDARDS FOR HIGHWAYS AND INCIDENTAL STRUCTURES

STANDARD TYPE S INLET DOUBLE GRATE TANDEM — 5 / C-401

STANDARD NO. MD 379.03

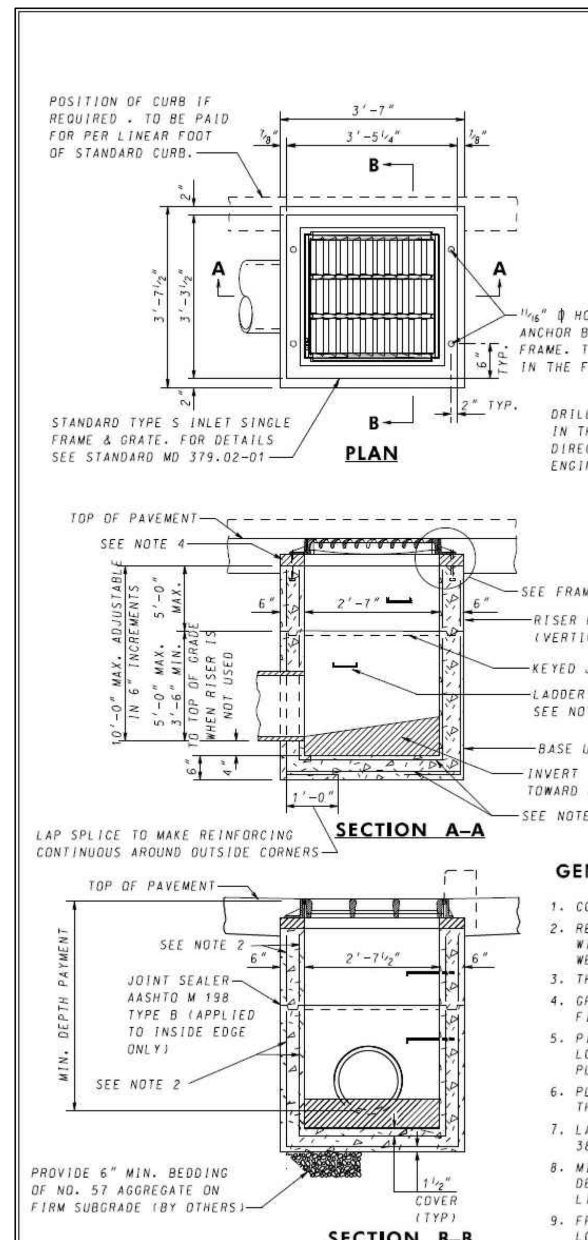

GENERAL NOTES

1. CONCRETE TO BE MIX NO.6 (4500 PSI).
2. REINFORCING WALLS -2 LAYERS OF 4x4-W4.0x W4.0 WELDED WIRE FABRIC; BASE - 2 LAYERS OF 4X4 – W5.0 X W5.0 WELDED WIRE FABRIC
3. THREADED PLASTIC INSERTS TO BE PROVIDED FOR HANDLING.
4. GRADE AND SLOPE ADJUSTMENTS TO BE COMPLETED IN THE FIELD USING CONCRETE MIX NO.6.
5. PIPE OPENINGS TO BE PROVIDED AS REQUIRED. FOR SIZE, LOCATION AND INVERT ELEVATIONS REFER TO CONSTRUCTION PLANS.
6. PLACEMENT OF SUBGRADE DRAINAGE WILL BE AS DIRECTED BY THE ENGINEER OR AS NOTED ON THE CONSTRUCTION PLANS.
7. LADDER RUNGS SHALL BE IN ACCORDANCE WITH STANDARD MD 383.91 AND MD 383.92 OR AS DIRECTED BY THE ENGINEER.
8. MINIMUM DEPTH PAYMENT PER "EACH" INLET INCLUDES DEPTHS UP TO 3'-6". VERTICAL DEPTH PAYMENT PER LINEAR FOOT FOR DEPTHS IN EXCESS OF 3'-6".
9. FROM CURB LINE, INLET HAS BEEN DESIGNED FOR HS-25 LOADING, ACCORDING TO AASHTO LRFD BRIDGE DESIGN SPECIFICATIONS

SPECIFICATION 305 | CATEGORY CODE ITEMS
APPROVED — DIRECTOR – OFFICE OF HIGHWAY DEVELOPMENT
APPROVAL • SHA REVISIONS: APPROVAL 4-15-87; REVISED 8-3-10; REVISED 10-7-14; REVISED –
APPROVAL • FEDERAL HIGHWAY ADMINISTRATION: APPROVAL 6-23-87; REVISED 7-26-10; REVISED 9-29-14

Maryland Department of Transportation
STATE HIGHWAY ADMINISTRATION
STANDARDS FOR HIGHWAYS AND INCIDENTAL STRUCTURES

PRECAST STANDARD TYPE S INLET SINGLE GRATE — 4 / C-401

STANDARD NO. MD 374.73

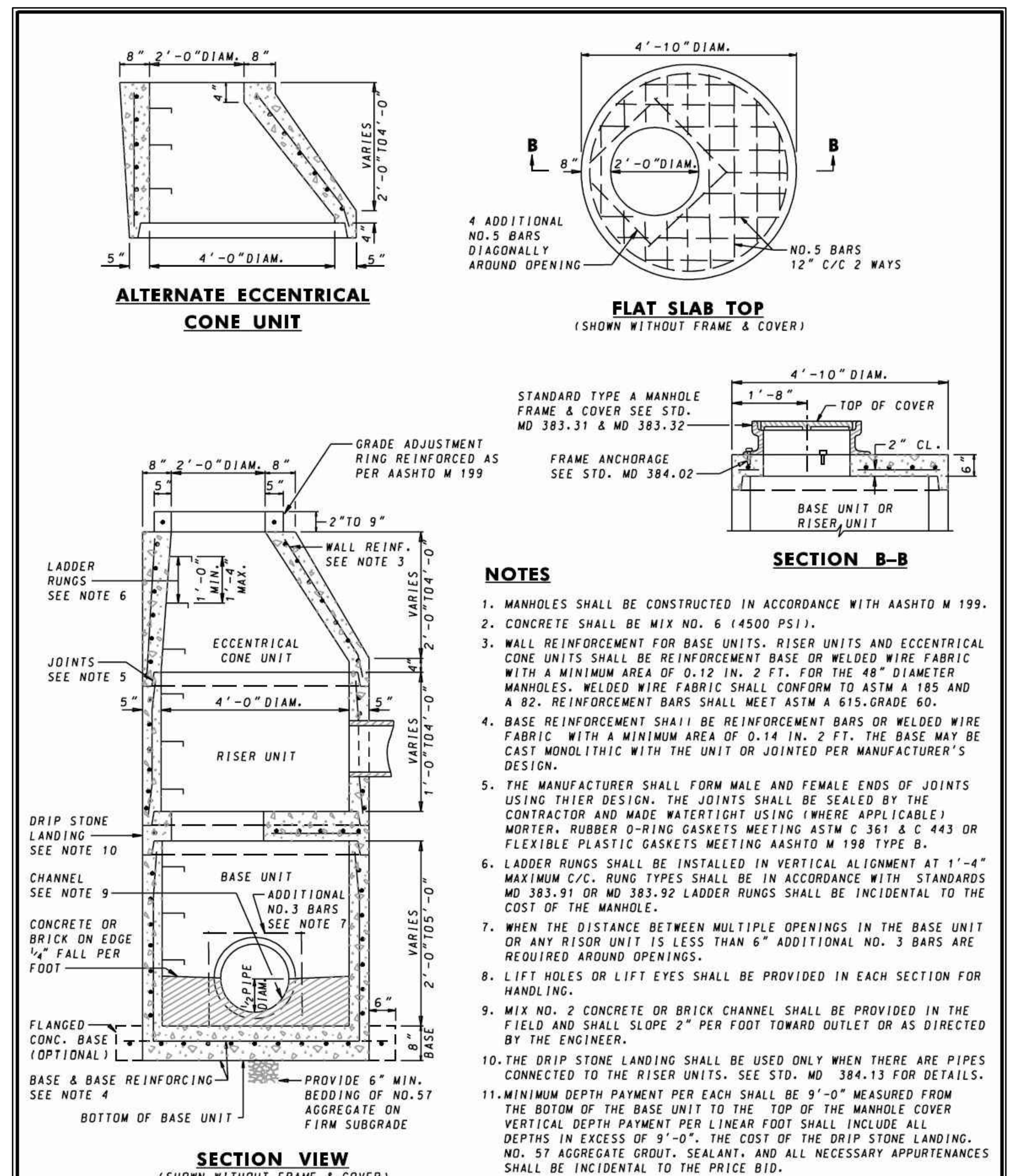

NOTES

1. MANHOLES SHALL BE CONSTRUCTED IN ACCORDANCE WITH AASHTO M 199.
2. CONCRETE SHALL BE MIX NO. 6 (4500 PSI).
3. WALL REINFORCEMENT FOR BASE UNITS, RISER UNITS AND ECCENTRICAL CONE UNITS SHALL BE REINFORCEMENT BASE OR WELDED WIRE FABRIC WITH A MINIMUM AREA OF 0.12 IN. 2 FT. FOR THE 48" DIAMETER MANHOLES. WELDED WIRE FABRIC SHALL CONFORM TO ASTM A 185 AND A 82. REINFORCEMENT BARS SHALL MEET ASTM A 615.GRADE 60.
4. BASE REINFORCEMENT SHAII BE REINFORCEMENT BARS OR WELDED WIRE FABRIC WITH A MINIMUM AREA OF 0.14 IN. 2 FT. THE BASE MAY BE CAST MONOLITHIC WITH THE UNIT OR JOINTED PER MANUFACTURER'S DESIGN.
5. THE MANUFACTURER SHALL FORM MALE AND FEMALE ENDS OF JOINTS USING THIER DESIGN. THE JOINTS SHALL BE SEALED BY THE CONTRACTOR AND MADE WATERTIGHT USING (WHERE APPLICABLE) MORTER, RUBBER O-RING GASKETS MEETING ASTM C 361 & C 443 OR FLEXIBLE PLASTIC GASKETS MEETING AASHTO M 198 TYPE B.
6. LADDER RUNGS SHALL BE INSTALLED IN VERTICAL ALIGNMENT AT 1'-4" MAXIMUM C/C. RUNG TYPES SHALL BE IN ACCORDANCE WITH STANDARDS MD 383.91 OR MD 383.92 LADDER RUNGS SHALL BE INCIDENTAL TO THE COST OF THE MANHOLE.
7. WHEN THE DISTANCE BETWEEN MULTIPLE OPENINGS IN THE BASE UNIT OR ANY RISOR UNIT IS LESS THAN 6" ADDITIONAL NO. 3 BARS ARE REQUIRED AROUND OPENINGS.
8. LIFT HOLES OR LIFT EYES SHALL BE PROVIDED IN EACH SECTION FOR HANDLING.
9. MIX NO. 2 CONCRETE OR BRICK CHANNEL SHALL BE PROVIDED IN THE FIELD AND SHALL SLOPE 2" PER FOOT TOWARD OUTLET OR AS DIRECTED BY THE ENGINEER.
10. THE DRIP STONE LANDING SHALL BE USED ONLY WHEN THERE ARE PIPES CONNECTED TO THE RISER UNITS. SEE STD. MD 384.13 FOR DETAILS.
11. MINIMUM DEPTH PAYMENT PER EACH SHALL BE 9'-0" MEASURED FROM THE BOTOM OF THE BASE UNIT TO THE TOP OF THE MANHOLE COVER VERTICAL DEPTH PAYMENT PER LINEAR FOOT SHALL INCLUDE ALL DEPTHS IN EXCESS OF 9'-0". THE COST OF THE DRIP STONE LANDING. NO. 57 AGGREGATE GROUT. SEALANT. AND ALL NECESSARY APPURTENANCES SHALL BE INCIDENTAL TO THE PRICE BID.

SPECIFICATION 305 | CATEGORY CODE ITEMS
APPROVED — DIRECTOR – OFFICE OF HIGHWAY DEVELOPMENT
APPROVAL • SHA REVISIONS: APPROVAL 2-22-91; REVISED 10-1-01
APPROVAL • FEDERAL HIGHWAY ADMINISTRATION: APPROVAL 1-2-91

Maryland Department of Transportation
STATE HIGHWAY ADMINISTRATION
STANDARDS FOR HIGHWAYS AND INCIDENTAL STRUCTURES

48" DIAMETER PRECAST MANHOLE FOR 12" TO 24" PIPES — 6 / C-401

STANDARD NO. MD 384.01

01/24/2022

Professional Certification:
I hereby certify that these documents were prepared or approved by me, and that I am a duly licensed professional under the laws of the State of: MARYLAND, License # 20945, Expiration Date 08-23-2023.

FSA
FREDERICK, SEIBERT & ASSOCIATES, INC. ©2021 fsa-inc.com
CIVIL ENGINEERS • SURVEYORS • LANDSCAPE ARCHITECTS • LAND PLANNERS
128 SOUTH POTOMAC STREET HAGERSTOWN, MD 21740 301.791.3650
20 WEST BALTIMORE STREET GREENCASTLE, PA 17225 717.597.1007
505 SOUTH HANOVER STREET CARLISLE, PA 17013 717.701.8111
5201 SPRING ROAD SHERMANS DALE, PA 17090 717.567.3680

MARK: | DESCRIPTION: | DATE:

SHEETZ #145 - HAGERSTOWN

SITUATED AT 18717 LONGMEADOW ROAD

WASHINGTON COUNTY, MARYLAND

SHEETZ INC.
351 SHEETZ WAY CLAYSBURG, PA 16625

PROJECT NO. 7989.0	
DWN BY BRADY BLAIR	DATE 10-06-2021
PROJECT MANAGER DAVID TROSTLE	EMAIL dave@fsa-md.com
TAX MAP - GRID - PARCEL	
SCALE AS SHOWN	

SHEET TITLE

CONSTRUCTION PROFILES - UTILITY

C-401
SHEET 09 OF 12

SP-21-031

P:\SHARED FOLDERS\PROJECTS\7989\7989.1\DWG\SITE PLAN\09 - CONSTRUCTION PROFILES - UTILITY.DWG 1/24/2022

1 / C-501 DETAIL B-1 STABILIZED CONSTRUCTION ENTRANCE

STANDARD SYMBOL: SCE

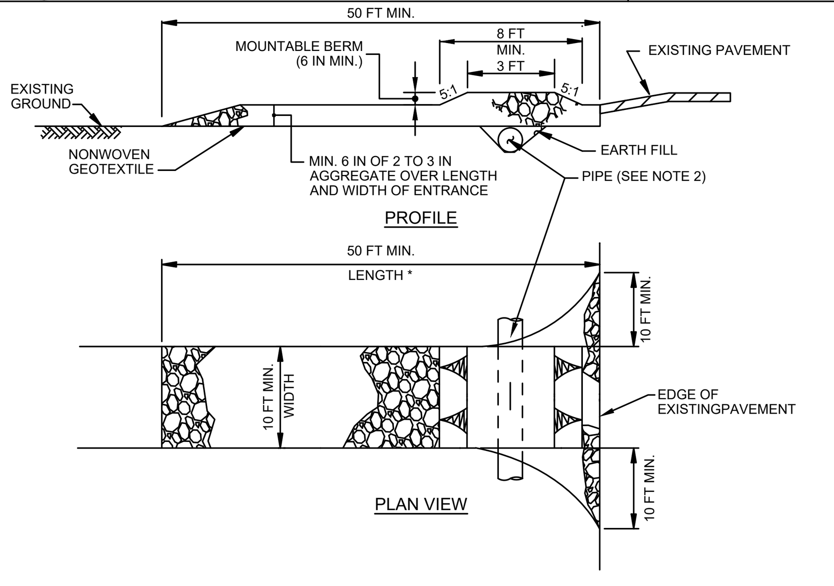

CONSTRUCTION SPECIFICATIONS

1. PLACE STABILIZED CONSTRUCTION ENTRANCE IN ACCORDANCE WITH THE APPROVED PLAN. VEHICLES MUST TRAVEL OVER THE ENTIRE LENGTH OF THE SCE. USE MINIMUM LENGTH OF 50 FEET (*30 FEET FOR SINGLE RESIDENCE LOT). USE MINIMUM WIDTH OF 10 FEET. FLARE SCE 10 FEET MINIMUM AT THE EXISTING ROAD TO PROVIDE A TURNING RADIUS.
2. PIPE ALL SURFACE WATER FLOWING TO OR DIVERTED TOWARD THE SCE UNDER THE ENTRANCE, MAINTAINING POSITIVE DRAINAGE. PROTECT PIPE INSTALLED THROUGH THE SCE WITH A MOUNTABLE BERM WITH 5:1 SLOPES AND A MINIMUM OF 12 INCHES OF STONE OVER THE PIPE. PROVIDE PIPE AS SPECIFIED ON APPROVED PLAN. WHEN THE SCE IS LOCATED AT A HIGH SPOT AND HAS NO DRAINAGE TO CONVEY, A PIPE IS NOT NECESSARY. A MOUNTABLE BERM IS REQUIRED WHEN SCE IS NOT LOCATED AT A HIGH SPOT.
3. PREPARE SUBGRADE AND PLACE NONWOVEN GEOTEXTILE, AS SPECIFIED IN SECTION H-1 MATERIALS.
4. PLACE CRUSHED AGGREGATE (2 TO 3 INCHES IN SIZE) OR EQUIVALENT RECYCLED CONCRETE (WITHOUT REBAR) AT LEAST 6 INCHES DEEP OVER THE LENGTH AND WIDTH OF THE SCE.
5. MAINTAIN ENTRANCE IN A CONDITION THAT MINIMIZES TRACKING OF SEDIMENT. ADD STONE OR MAKE OTHER REPAIRS AS CONDITIONS DEMAND TO MAINTAIN CLEAN SURFACE, MOUNTABLE BERM, AND SPECIFIED DIMENSIONS. IMMEDIATELY REMOVE STONE AND/OR SEDIMENT SPILLED, DROPPED, OR TRACKED ONTO ADJACENT ROADWAY BY VACUUMING, SCRAPING, AND/OR SWEEPING. WASHING ROADWAY TO REMOVE MUD TRACKED ONTO PAVEMENT IS NOT ACCEPTABLE UNLESS WASH WATER IS DIRECTED TO AN APPROVED SEDIMENT CONTROL PRACTICE.

MARYLAND STANDARDS AND SPECIFICATIONS FOR SOIL EROSION AND SEDIMENT CONTROL

U.S. DEPARTMENT OF AGRICULTURE NATURAL RESOURCES CONSERVATION SERVICE	2011	MARYLAND DEPARTMENT OF ENVIRONMENT WATER MANAGEMENT ADMINISTRATION

3 / C-501 DETAIL E-9-2 AT-GRADE INLET PROTECTION

STANDARD SYMBOL: AGIP

MAXIMUM DRAINAGE AREA = 1 ACRE

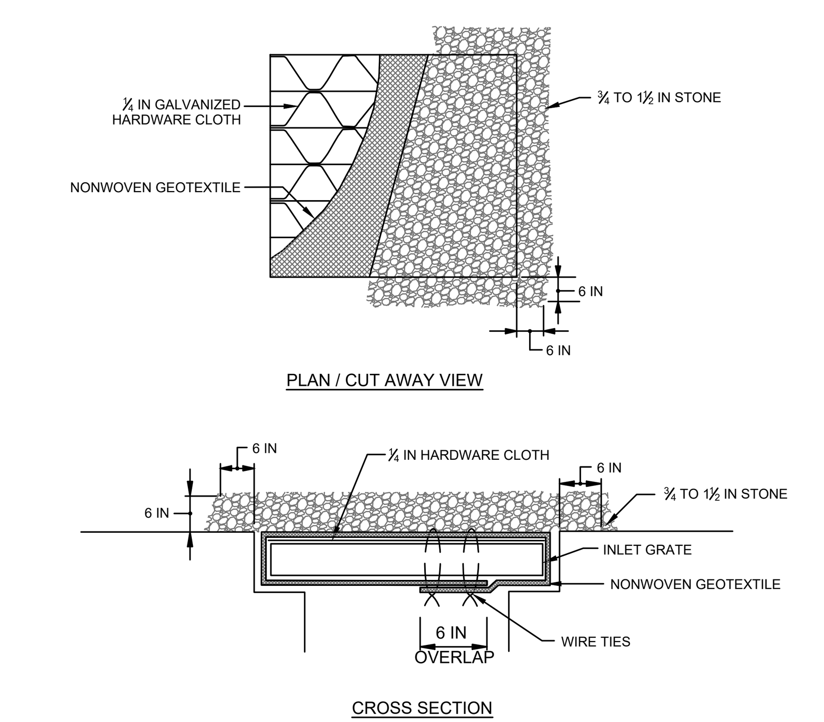

CONSTRUCTION SPECIFICATIONS

1. USE NONWOVEN GEOTEXTILE AS SPECIFIED IN SECTION H-1 MATERIALS.
2. LIFT GRATE AND WRAP WITH NONWOVEN GEOTEXTILE TO COMPLETELY COVER ALL OPENINGS. SECURE WITH WIRE TIES AND SET GRATE BACK IN PLACE.
3. PLACE CLEAN ¾ TO 1½ INCH STONE OR EQUIVALENT RECYCLED CONCRETE 6 INCHES THICK ON THE GRATE.
4. STORM DRAIN INLET PROTECTION REQUIRES FREQUENT MAINTENANCE. REMOVE ACCUMULATED SEDIMENT AFTER EACH RAIN EVENT TO MAINTAIN FUNCTION AND AVOID PREMATURE CLOGGING. IF INLET PROTECTION DOES NOT COMPLETELY DRAIN WITHIN 24 HOURS AFTER A STORM EVENT, IT IS CLOGGED. WHEN THIS OCCURS, REMOVE ACCUMULATED SEDIMENT AND CLEAN, OR REPLACE GEOTEXTILE AND STONE.

MARYLAND STANDARDS AND SPECIFICATIONS FOR SOIL EROSION AND SEDIMENT CONTROL

U.S. DEPARTMENT OF AGRICULTURE NATURAL RESOURCES CONSERVATION SERVICE	2011	MARYLAND DEPARTMENT OF ENVIRONMENT WATER MANAGEMENT ADMINISTRATION

5 / C-501 DETAIL F-4 FILTER BAG

STANDARD SYMBOL: ☒FB

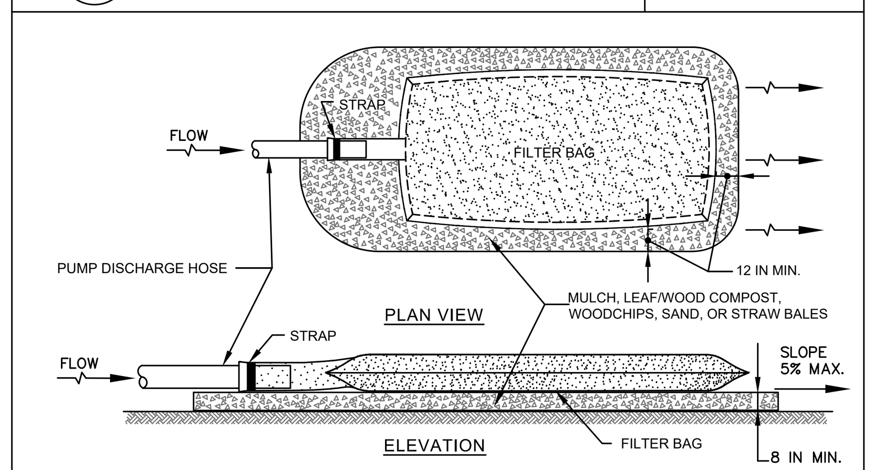

CONSTRUCTION SPECIFICATIONS

1. TIGHTLY SEAL SLEEVE AROUND THE PUMP DISCHARGE HOSE WITH A STRAP OR SIMILAR DEVICE.
2. PLACE FILTER BAG ON SUITABLE BASE (E.G., MULCH, LEAF/WOOD COMPOST, WOODCHIPS, SAND, OR STRAW BALES) LOCATED ON A LEVEL OR 5% MAXIMUM SLOPING SURFACE. DISCHARGE TO A STABILIZED AREA. EXTEND BASE A MINIMUM OF 12 INCHES FROM EDGES OF BAG.
3. CONTROL PUMPING RATE TO PREVENT EXCESSIVE PRESSURE WITHIN THE FILTER BAG IN ACCORDANCE WITH THE MANUFACTURER RECOMMENDATIONS. AS THE BAG FILLS WITH SEDIMENT, REDUCE PUMPING RATE.
4. REMOVE AND PROPERLY DISPOSE OF FILTER BAG UPON COMPLETION OF PUMPING OPERATIONS OR AFTER BAG HAS REACHED CAPACITY, WHICHEVER OCCURS FIRST. SPREAD THE DEWATERED SEDIMENT FROM THE BAG IN AN APPROVED UPLAND AREA AND STABILIZE WITH SEED AND MULCH BY THE END OF THE WORK DAY. RESTORE THE SURFACE AREA BENEATH THE BAG TO ORIGINAL CONDITION UPON REMOVAL OF THE DEVICE.
5. USE NONWOVEN GEOTEXTILE WITH DOUBLE STITCHED SEAMS USING HIGH STRENGTH THREAD. SIZE SLEEVE TO ACCOMMODATE A MAXIMUM 4 INCH DIAMETER PUMP DISCHARGE HOSE. THE BAG MUST BE MANUFACTURED FROM A NONWOVEN GEOTEXTILE THAT MEETS OR EXCEEDS MINIMUM AVERAGE ROLL VALUES (MARV) FOR THE FOLLOWING:

GRAB TENSILE	250 LB	ASTM D-4632
PUNCTURE	150 LB	ASTM D-4833
FLOW RATE	70 GAL/MIN/FT²	ASTM D-4491
PERMITTIVITY (SEC^{-1})	1.2 SEC^{-1}	ASTM D-4491
UV RESISTANCE	70% STRENGTH @ 500 HOURS	ASTM D-4355
APPARENT OPENING SIZE (AOS)	0.15-0.18 MM	ASTM D-4751
SEAM STRENGTH	90%	ASTM D-4632

6. REPLACE FILTER BAG IF BAG CLOGS OR HAS RIPS, TEARS, OR PUNCTURES. DURING OPERATION KEEP CONNECTION BETWEEN PUMP HOSE AND FILTER BAG WATER TIGHT. REPLACE BEDDING IF IT BECOMES DISPLACED.

MARYLAND STANDARDS AND SPECIFICATIONS FOR SOIL EROSION AND SEDIMENT CONTROL

U.S. DEPARTMENT OF AGRICULTURE NATURAL RESOURCES CONSERVATION SERVICE	2011	MARYLAND DEPARTMENT OF ENVIRONMENT WATER MANAGEMENT ADMINISTRATION

SOIL EROSION, SEDIMENT CONTROL & SEEDING NOTES

1. All soil erosion/sediment control measures shall comply with the “2011 Maryland Standards and Specifications for Soil Erosion and Sediment Control” and the provisions of the approved plan.
2. All grading and stabilization shall comply with the “2011 Maryland Standards and Specifications for Soil Erosion and Sediment Control”, “Section B - Grading and Stabilization” and the provisions of the approved plan.
3. All soil erosion and sediment control practices (BMP's) are to be constructed and/or installed prior to or at the initiation of grading in accordance with “2011 Maryland Standards and Specifications for Soil Erosion and Sediment Control”, and the approved plan.
4. A grading unit is the maximum contiguous area allowed to be graded at a given time and is limited to 20 acres. Work may proceed to a subsequent grading unit when at least 50 percent of the disturbed area in the preceding grading unit has been stabilized and approved by the enforcement authority and/or the Washington County Soil Conservation District (approval authority). Unless otherwise specified and approved by the approval authority, no more than 30 acres cumulatively may be disturbed at a given time.
5. For initial soil disturbance or re-disturbance, temporary or permanent stabilization must be completed within:
   a) Three (3) calendar days as to the surface of all perimeter dikes, swales, ditches, perimeter slopes, and all slopes steeper than 3 horizontal to 1 vertical (3:1); and
   b) Seven (7) calendar days as to all other disturbed or graded areas on the project site not under active grading.
6. Stockpiles must be stabilized in accordance within the 7 day stabilization requirement, as well as, Standard B-4-1 Incremental Stabilization and Standard B-4-4 Temporary Stabilization (as applicable).
7. All constructed channels and swales shall have specified treatment installed to the design flow depth completed downstream to upstream as construction progresses. An installation detail shall be shown on the plans.
8. All storm drain and sanitary sewer lines not in paved areas are to be mulched and seeded within 3 days of initial backfill unless otherwise specified on plans.
9. Electric Power, telephone, and gas lines are to be compacted, seeded, and mulched within 3 days after initial backfill unless otherwise specified on plans.
10. No slope shall be greater than 2:1.
11. As required by Section B, of the Maryland Standards and Specifications for Soil Erosion and Sediment Control, “Adequate Vegetative Stabilization”, is defined as 95 percent ground cover. The Washington County Soil Conservation District requires the project adhere to this for scheduling of the Final Site Closeout Review, and/or release of the site for soil erosion and sediment control.

For sites 1.0 acre or more, the following are required:

A. Maryland Department of the Environment, General Permit for Stormwater Associated with a Construction Activity, NPDES Permit Number MDRC, State Discharge Permit Number 14GP, or an Individual Permit.
B. The Maryland Department of the Environment (General/Individual Permit - Notice of Intent- NOI) application and permit shall be posted and/or available on-site at all times.
C. During construction, all soil erosion and sediment control practices (BMP's) shall be inspected and recorded on the “Standard Inspection Form”, “General Permit for Stormwater Associated with Construction Activity” per the Maryland Department of the Environment (General/Individual Permit - Notice of Intent - NOI).
D. Following construction and release of the site for soil erosion and sediment control by the Washington County Soil Conservation District, i.e., all portions of a site have been permanently stabilized, and all stormwater discharges from construction sites that are authorized by the permit are eliminated, the authorized permittee shall submit the Maryland Department of the Environment, General/Individual Permit - Notice of Termination-NOT.

Sequence of Construction:

1. Contractor to contact FSA, Inc. (301) 791-3650, the WCDPW Engineering & Construction (240) 313-2400, and WCSCD (301) 797-6821 ext. 3 at least five (5) days prior to the start of any earthwork to schedule a pre construction meeting.
2. Before any construction activity begins the contractor is to contact Frederick Seibert & Associates, Inc. at 301-791-3650 to verify site benchmarks.
4. The contractor shall install all perimeter controls (i.e. 8" filter log, inlet protection) at all existing inlets.
5. Contractor to begin demo of site and building.
6. Once concrete is removed, contractor shall install stabilized construction entrance and associated filter log. If any tracking of mud or dirt occurs on a public road the contractor must immediately stop work clean the roadway.
7. Contractor to begin grading of the site. Any excess material must be taken off-site to a site with an approved and current sediment erosion control plan. Any fill material that is brought to the site must come from a site with and approved and current soil erosion and sediment control plan. All sinkholes that are present or develop during construction must be remediated and certified by the site Geotechnical Engineer. Contractor to contact Geotechnical Engineer immediately after the discovery of any sinkhole.
8. The contractor shall stabilize all disturbed areas with seed and mulch and temporary erosion control matting where needed after excavating operations are complete. Use temporary seeding for areas left exposed for more than seven (7) consecutive days.
9. As the site is brought to grade the contractor may begin to install the stormdrain systems starting on the downstream end and working upstream. As the inlets are installed the contractor is to immediately install AGIP or filter log around the inlets. The contractor shall monitor the inlet protection and repair and adjust it as needed as site grading progresses. The filterra inlets should be protected from sediment until site is paved.
10. Once the site is brought to grade the contractor can begin construction of the building, gas islands and parking lot.
11. Contractor is to contact Frederick Seibert & Associates, Inc. (301) 791-3650, WCSCD (301) 797-6821 ext.3, and the Washington Co. DPW - Engineering and Construction (240) 313-2400 prior to installation of Filttera System to schedule the required inspections.
12. Contractor to final grade site. Stabilize all disturbed areas with seed and mulch after construction operations are complete.
13. All excess debris or construction material to be taken offsite to approved site with a approved and current sediment & erosion control plan.
14. Contractor to contact FSA, Inc. and WCSCD at least 5 days prior to the removal of any sediment control features to schedule a final site close out review and meeting.
15. Once approval is granted and temporary sediment erosion controls are removed, complete further stabilization in those area.

2 / C-501 DETAIL E-6 FILTER LOG

STANDARD SYMBOL: FL-18

DESIGNATION FL-18 REFERS TO 18 INCH DIAMETER FILTER LOG.

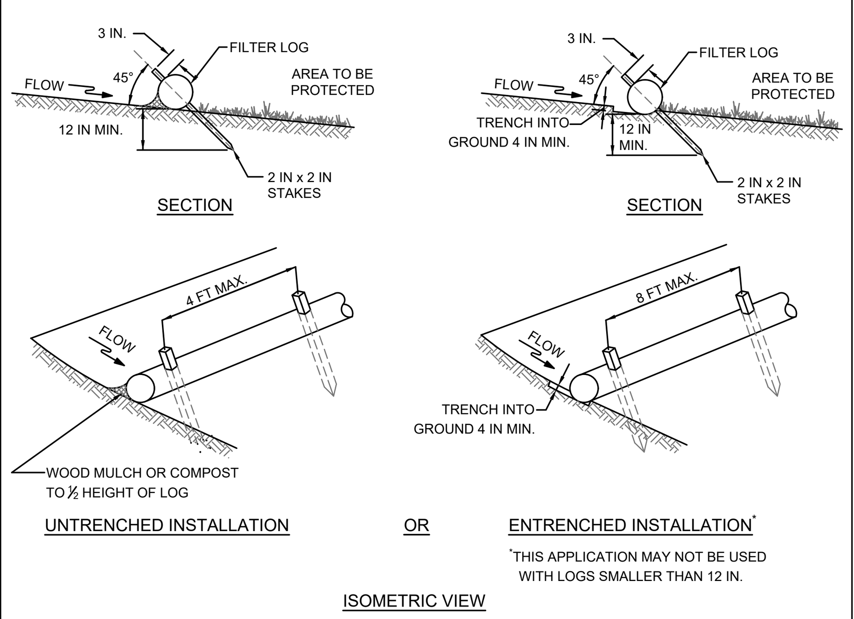

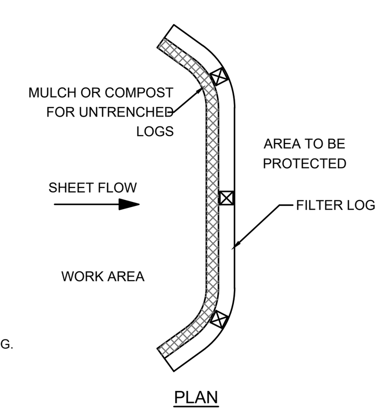

CONSTRUCTION SPECIFICATIONS

1. PRIOR TO INSTALLATION, CLEAR ALL OBSTRUCTIONS INCLUDING ROCKS, CLODS, AND DEBRIS GREATER THAN ONE INCH THAT MAY INTERFERE WITH PROPER FUNCTION OF FILTER LOG.
2. FILL LOG NETTING UNIFORMLY WITH COMPOST (IN ACCORDANCE WITH SECTION H-1 MATERIALS), OR OTHER APPROVED BIODEGRADABLE MATERIAL TO DESIRED LENGTH SUCH THAT LOGS DO NOT DEFORM.
3. INSTALL FILTER LOGS PERPENDICULAR TO THE FLOW DIRECTION AND PARALLEL TO THE SLOPE WITH THE BEGINNING AND END OF THE INSTALLATION POINTING SLIGHTLY UP THE SLOPE CREATING A "J" SHAPE AT EACH END TO PREVENT BYPASS.
4. FOR UNTRENCHED INSTALLATION BLOW OR HAND PLACE MULCH OR COMPOST ON UPHILL SIDE OF THE SLOPE ALONG LOG.
5. STAKE FILTER LOG EVERY 4 FEET OR CLOSER ALONG ENTIRE LENGTH OF LOG OR TRENCH LOG INTO GROUND A MINIMUM OF 4 INCHES AND STAKE LOG EVERY 8 FEET OR CLOSER.
6. USE STAKES WITH A MINIMUM NOMINAL CROSS SECTION OF 2X2 INCH AND OF SUFFICIENT LENGTH TO ATTAIN A MINIMUM OF 12 INCHES INTO THE GROUND AND 3 INCHES PROTRUDING ABOVE LOG.
7. WHEN MORE THAN ONE LOG IS NEEDED, OVERLAP ENDS 12 INCHES MINIMUM AND STAKE.
8. REMOVE SEDIMENT WHEN IT HAS ACCUMULATED TO A DEPTH OF ½ THE EXPOSED HEIGHT OF LOG AND REPLACE MULCH. REPLACE FILTER LOG IF TORN. REINSTALL FILTER LOG IF UNDERMINING OR DISLODGING OCCURS. REPLACE CLOGGED FILTER LOGS. FOR PERMANENT APPLICATIONS, ESTABLISH AND CONTINUOUSLY MEET REQUIREMENTS FOR ADEQUATE VEGETATIVE ESTABLISHMENT IN ACCORDANCE WITH SECTION B-4 VEGETATIVE STABILIZATION.

MARYLAND STANDARDS AND SPECIFICATIONS FOR SOIL EROSION AND SEDIMENT CONTROL

U.S. DEPARTMENT OF AGRICULTURE NATURAL RESOURCES CONSERVATION SERVICE	2011	MARYLAND DEPARTMENT OF ENVIRONMENT WATER MANAGEMENT ADMINISTRATION

4 / C-501 DETAIL B-4-6-B TEMPORARY SOIL STABILIZATION MATTING SLOPE APPLICATION

STANDARD SYMBOL: TSSMS – * lb/ft² (* INCLUDE SHEAR STRESS)

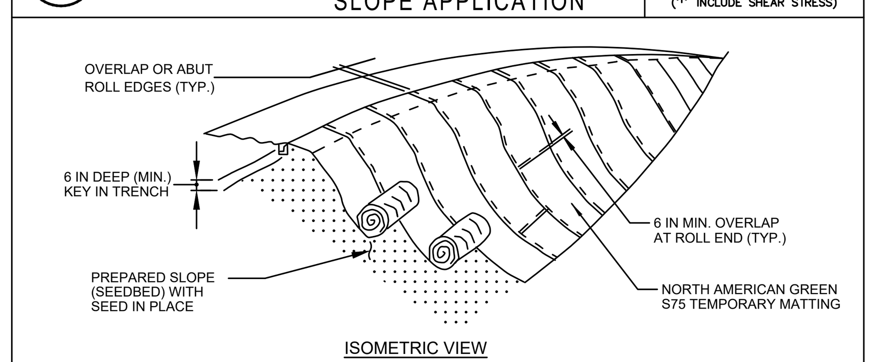

CONSTRUCTION SPECIFICATIONS

1. USE MATTING THAT HAS A DESIGN VALUE FOR SHEAR STRESS EQUAL TO OR HIGHER THAN THE SHEAR STRESS DESIGNATED ON APPROVED PLANS.
2. USE TEMPORARY SOIL STABILIZATION MATTING MADE OF DEGRADABLE (LASTS 6 MONTHS MINIMUM) NATURAL OR MAN-MADE FIBERS (MOSTLY ORGANIC). MAT MUST HAVE UNIFORM THICKNESS AND DISTRIBUTION OF FIBERS THROUGHOUT AND BE SMOLDER RESISTANT. CHEMICALS USED IN THE MAT MUST BE NON-LEACHING AND NON-TOXIC TO VEGETATION AND SEED GERMINATION AND NON-INJURIOUS TO THE SKIN. IF PRESENT, NETTING MUST BE EXTRUDED PLASTIC WITH A MAXIMUM MESH OPENING OF 2x2 INCHES AND SUFFICIENTLY BONDED OR SEWN ON 2 INCH CENTERS ALONG LONGITUDINAL AXIS OF THE MATERIAL TO PREVENT SEPARATION OF THE NET FROM THE PARENT MATERIAL.
3. SECURE MATTING USING STEEL STAPLES, WOOD STAKES, OR BIODEGRADABLE EQUIVALENT. STAPLES MUST BE "U" OR "T" SHAPED STEEL WIRE HAVING A MINIMUM GAUGE OF NO. 11 AND NO. 8 RESPECTIVELY. "U" SHAPED STAPLES MUST AVERAGE 1 TO 1½ INCHES WIDE AND BE A MINIMUM OF 6 INCHES LONG. "T" SHAPED STAPLES MUST HAVE A MINIMUM 8 INCH MAIN LEG, A MINIMUM 1 INCH SECONDARY LEG, AND A MINIMUM 4 INCH HEAD. WOOD STAKES MUST BE ROUGH-SAWN HARDWOOD, 12 TO 24 INCHES IN LENGTH, 1x3 INCH IN CROSS SECTION, AND WEDGE SHAPED AT THE BOTTOM.
4. PERFORM FINAL GRADING, TOPSOIL APPLICATION, SEEDBED PREPARATION, AND PERMANENT SEEDING IN ACCORDANCE WITH SPECIFICATIONS. PLACE MATTING WITHIN 48 HOURS OF COMPLETING SEEDING OPERATIONS UNLESS END OF WORKDAY STABILIZATION IS SPECIFIED ON THE APPROVED EROSION & SEDIMENT CONTROL PLAN.
5. UNROLL MATTING DOWNSLOPE. LAY MAT SMOOTHLY AND FIRMLY UPON THE SEEDED SURFACE. AVOID STRETCHING THE MATTING.
6. OVERLAP OR ABUT ROLL EDGES PER MANUFACTURER RECOMMENDATIONS. OVERLAP ROLL ENDS BY 6 INCHES (MINIMUM), WITH THE UPSLOPE MAT OVERLAPPING ON TOP OF THE DOWNSLOPE MAT.
7. KEY IN THE UPSLOPE END OF MAT 6 INCHES (MINIMUM) BY DIGGING A TRENCH, PLACING THE MATTING ROLL END IN THE TRENCH, STAPLING THE MAT IN PLACE, REPLACING THE EXCAVATED MATERIAL, AND TAMPING TO SECURE THE MAT END IN THE KEY.
8. STAPLE/STAKE MAT IN A STAGGERED PATTERN ON 4 FOOT (MAXIMUM) CENTERS THROUGHOUT AND 2 FOOT (MAXIMUM) CENTERS ALONG SEAMS, JOINTS, AND ROLL ENDS.
9. ESTABLISH AND MAINTAIN VEGETATION SO THAT REQUIREMENTS FOR ADEQUATE VEGETATIVE ESTABLISHMENT ARE CONTINUOUSLY MET IN ACCORDANCE WITH SECTION B-4 VEGETATIVE STABILIZATION.

MARYLAND STANDARDS AND SPECIFICATIONS FOR SOIL EROSION AND SEDIMENT CONTROL

U.S. DEPARTMENT OF AGRICULTURE NATURAL RESOURCES CONSERVATION SERVICE	2011	MARYLAND DEPARTMENT OF ENVIRONMENT WATER MANAGEMENT ADMINISTRATION

TEMPORARY SEEDING SUMMARY

HARDINESS ZONE (FIGURE B.3): 6b SEED MIXTURE (TABLE B.1)					FERTILIZER RATE (10-20-20)	LIME RATE
NO.	SPECIES	APPLICATION RATE (lb/ac)	SEEDING DATES	SEEDING DEPTHS		
1	Barley	96	Zone 6b: Mar 1-May 15/ Aug 1-Oct 15	1"	436 lb/ac. (10 lb/1000 s.f.)	2 tons/ac. (90 lb/1000 s.f.)

PERMANENT SEEDING SUMMARY

HARDINESS ZONE (FIGURE B.3): 6b SEED MIXTURE (TABLE B.1)					FERTILIZER RATE (10-20-20)			LIME RATE
NO.	SPECIES	APPLICATION RATE (lb/ac)	SEEDING DATES	SEEDING DEPTH	N	P205	K20	
6	Tall Fescue	40	Zone 6b: Mar 1-May 15/Aug 1-Oct 15	1/4"-1/2"	45 lb/ac. (1 lb/1000 s.f.)	90 lb/ac. (2 lb/1000 s.f.)	90 lb/ac. (2 lb/1000 s.f.)	2 tons/ac. (90 lb/1000 s.f.)
	Perennial Ryegrass	25						
	White Clover	5						

6 / C-501 FILTERRA INTERNAL BYPASS CURB (FTIBC) CONFIGURATION DETAIL

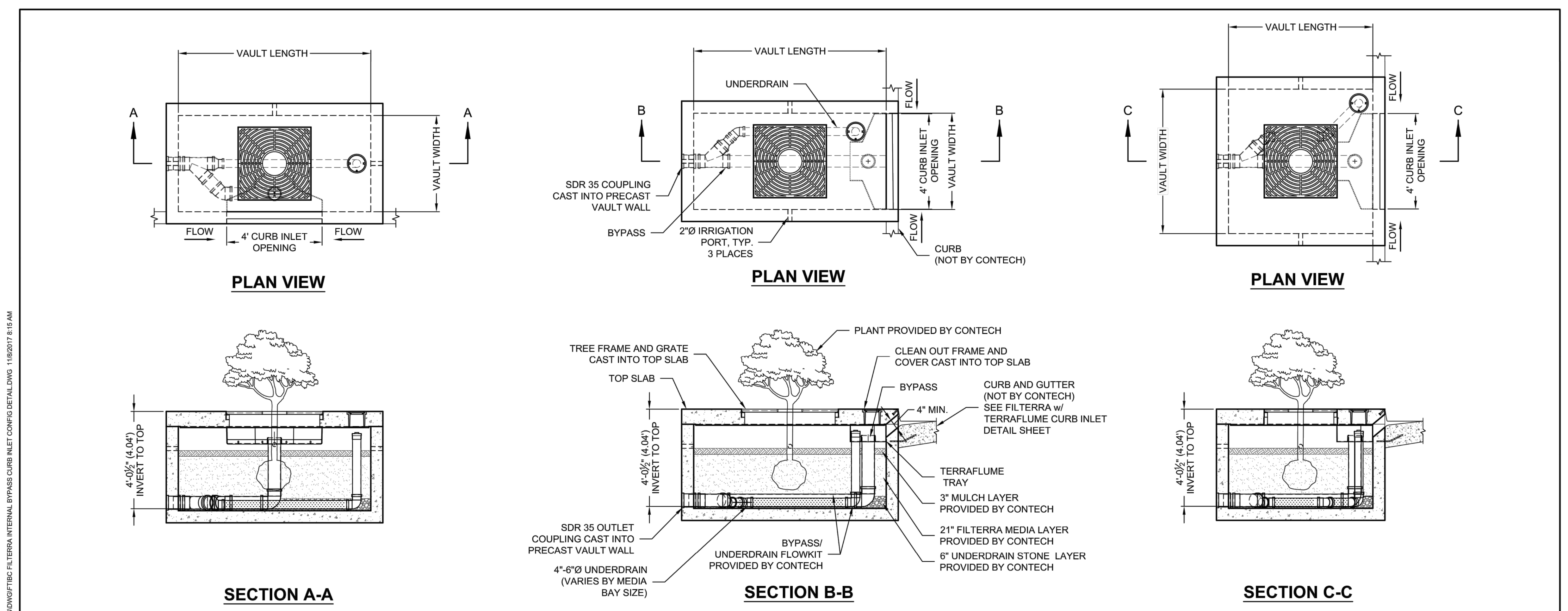

FTIBC LONG SIDE CURB INLET

DESIGNATION	AVAIL-ABILITY	MEDIA BAY SIZE	VAULT SIZE (L x W)	MAX. OUTLET/ BYPASS PIPE DIA.	MAX. BYPASS FLOW (CFS)	UNDER-DRAIN PIPE DIA. (PERF)	TREE GRATE QTY. & SIZE
FTIBC0604	N/A CA	6 x 4	6 x 4	8" SDR 35	1.89	4" SDR 35	(1) 3' x 3'
FTIBC06504	CA ONLY	6.5 x 4	6.5 x 4	8" SDR 35	1.89	4" SDR 35	(1) 3' x 3'
FTIBC078045	MID-ATL ONLY	7.83 x 4.5	7.83 x 4.5	8" SDR 35	1.89	4" SDR 35	(1) 3' x 3'
FTIBC0804	N/A MID-ATL	8 x 4	8 x 4	8" SDR 35	1.89	4" SDR 35	(1) 3' x 3'
FTIBC0806	ALL	8 x 6	8 x 6	10" SDR 35	2.37	4" SDR 35	(1) 4' x 4'
FTIBC1006	ALL	10 x 6	10 x 6	10" SDR 35	2.37	6" SDR 35	(1) 4' x 4'
FTIBC1206	ALL	12 x 6	12 x 6	10" SDR 35	2.37	6" SDR 35	(2) 4' x 4'
FTIBC1307	ALL	13 x 7	13 x 7	10" SDR 35	2.37	6" SDR 35	(2) 4' x 4'

N/A = NOT AVAILABLE

FTIBC SHORT SIDE CURB INLET

DESIGNATION	AVAIL-ABILITY	MEDIA BAY SIZE	VAULT SIZE (W x L)	MAX. OUTLET/ BYPASS PIPE DIA.	MAX. BYPASS FLOW (CFS)	UNDER-DRAIN PIPE DIA. (PERF)	TREE GRATE QTY. & SIZE
FTIBC0406	N/A CA	4 x 6	4 x 6	8" SDR 35	1.89	4" SDR 35	(1) 3' x 3'
FTIBC04065	CA ONLY	4 x 6.5	4 x 6.5	8" SDR 35	1.89	4" SDR 35	(1) 3' x 3'
FTIBC0408	N/A MID-ATL	4 x 8	4 x 8	8" SDR 35	1.89	4" SDR 35	(1) 3' x 3'
FTIBC045078	MID-ATL ONLY	4.5 x 7.83	4.5 x 7.83	8" SDR 35	1.89	4" SDR 35	(1) 3' x 3'
FTIBC0608	ALL	6 x 8	6 x 8	10" SDR 35	2.37	4" SDR 35	(1) 4' x 4'
FTIBC0610	ALL	6 x 10	6 x 10	10" SDR 35	2.37	6" SDR 35	(1) 4' x 4'
FTIBC0612	ALL	6 x 12	6 x 12	10" SDR 35	2.37	6" SDR 35	(2) 4' x 4'
FTIBC0713	ALL	7 x 13	7 x 13	10" SDR 35	2.37	6" SDR 35	(2) 4' x 4'

N/A = NOT AVAILABLE

FTIBC SQUARE CURB INLET

DESIGNATION	AVAIL-ABILITY	MEDIA BAY SIZE	VAULT SIZE (L x W)	MAX. OUTLET/ BYPASS PIPE DIA.	MAX. BYPASS FLOW (CFS)	UNDER-DRAIN PIPE DIA. (PERF)	TREE GRATE QTY. & SIZE
FTIBC0404	ALL	4 x 4	4'-0"	6" SDR 35	1.42	4" SDR 35	(1) 3' x 3'
FTIBC0606	ALL	6 x 6	6'-0"	8" SDR 35	1.89	4" SDR 35	(1) 3' x 3'

N/A = NOT AVAILABLE

INTERNAL PIPE CONFIGURATION MAY VARY DEPENDING ON VAULT SIZE.

filterra
THIS PRODUCT MAY BE PROTECTED BY ONE OR MORE OF THE FOLLOWING U.S. PATENTS: 6,277,274; 6,569,321; 7,625,485, 7,425,261, 7,833,412; RELATED FOREIGN PATENTS.

The design and information shown on this drawing is provided as a service to the project owner, engineer and contractor by Contech Engineered Solutions LLC or one of its affiliated companies ("Contech"). Neither this drawing, nor any part thereof, may be used, reproduced or modified in any manner without the prior written consent of Contech. Failure to comply is done at the user's own risk and Contech expressly disclaims any liability or responsibility for such use. If discrepancies between the supplied information upon which the drawing is based and actual field conditions are encountered as site work progresses, these discrepancies must be reported to Contech immediately for re-evaluation of the design. Contech accepts no liability for designs based on missing, incomplete or inaccurate information supplied by others.

CONTECH ENGINEERED SOLUTIONS LLC
www.ContechES.com
9025 Centre Pointe Dr., Suite 400, West Chester, OH 45069
800-338-1122 513-645-7000 513-645-7993 FAX

FILTERRA INTERNAL BYPASS CURB (FTIBC) CONFIGURATION DETAIL

I:\COMMON\CAD\TREATMENT\54 FILTERRA\40 STANDARD DRAWINGS\FTIBC - INTERNAL BYPASS CURB INLET\LAYOUT DETAILS\DWG\FTIBC FILTERRA INTERNAL BYPASS CURB INLET CONFIG DETAIL.DWG 11/8/2017 8:15 AM

P:\SHARED FOLDERS\PROJECTS\7989\7989.1\DWG\SITE PLAN\10 - CONSTRUCTION DETAILS - ESC.DWG 1/24/2022

STATE OF MARYLAND — KEITH DAVID MOORE — No. 20945 — REGISTERED PROFESSIONAL ENGINEER
01/24/2022

Professional Certification:
I hereby certify that these documents were prepared or approved by me, and that I am a duly licensed professional under the laws of the State of: MARYLAND, License # 20945, Expiration Date 08-23-2023.

FSA FREDERICK, SEIBERT & ASSOCIATES, INC. ©2021 fsa-inc.com
CIVIL ENGINEERS • SURVEYORS • LANDSCAPE ARCHITECTS • LAND PLANNERS
128 SOUTH POTOMAC STREET HAGERSTOWN, MD 21740 301.791.3650
20 WEST BALTIMORE STREET GREENCASTLE, PA 17225 717.597.1007
505 SOUTH HANOVER STREET CARLISLE, PA 17013 717.701.8111
5201 SPRING ROAD SHERMANS DALE, PA 17090 717.567.3680

MARK:	DESCRIPTION:	DATE:

SHEETZ #145 - HAGERSTOWN

SITUATED AT 18717 LONGMEADOW ROAD
WASHINGTON COUNTY, MARYLAND
SHEETZ INC.
351 SHEETZ WAY CLAYSBURG, PA 16625

PROJECT NO. 7989.0	
DWN BY BRADY BLAIR	DATE 10-06-2021
PROJECT MANAGER DAVID TROSTLE	EMAIL dave@fsa-md.com
TAX MAP - GRID - PARCEL	
SCALE AS SHOWN	
SHEET TITLE CONSTRUCTION DETAILS - ESC	

C-501
SHEET 10 OF 12

SP-21-031

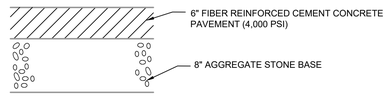

TYPICAL CONCRETE LOT PAVEMENT SECTION/ DUMPSTER PAD

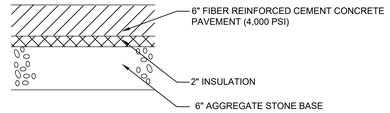

CARWASH ENTRANCE \ EXIT CONCRETE SLAB SECTION

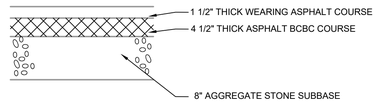

TYPICAL ASPHALT PAVING SECTION

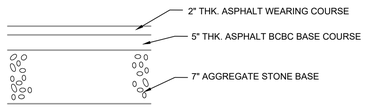

TYPICAL TRUCK DIESEL ASPHALT PAVING SECTION

1
C-502

DATE	BY	DESCRIPTION
REVISIONS		

Convenience Architecture and Design P.C.
351 Sheetz Way, Claysburg, PA 16625 (814)239-6013

SITE PAVEMENT DETAILS

SCALE: AS NOTED
DATE: 8/27/2019
DRAWN BY: DAH
FILENAME: DETAIL T
T

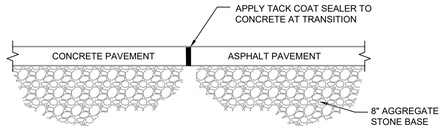

CONCRETE / ASPHALT PAVEMENT TRANSITION DETAIL
N.T.S.

3
C-502

DATE	BY	DESCRIPTION
REVISIONS		

Convenience Architecture and Design P.C.
351 Sheetz Way, Claysburg, PA 16625 (814)239-6013

asphalt paving details

SCALE: AS NOTED
DATE: 8/27/2019
DRAWN BY: DAH
FILENAME: DETAIL T
Z

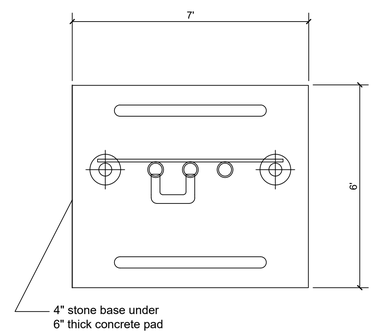

UST VENT PAD

4
C-502

DATE	BY	DESCRIPTION
REVISIONS		

SCALE: AS NOTED
DATE: 02-08-19
DRAWN BY: NMI
FILENAME: DETAIL D

Convenience Architecture and Design P.C.
351 Sheetz Way, Claysburg, PA 16625 (814)239-6013

UST VENT PAD DETAILS

D
SHEET NO.

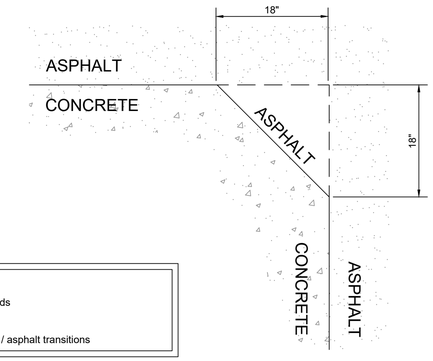

locations:
ust PADs
gas canopy pads
parking areas
dumpster
other concrete / asphalt transitions

CONCRETE / ASPHALT TRANSITION
SCALE: NO SCALE

7
C-502

DATE	BY	DESCRIPTION
REVISIONS		

Convenience Architecture and Design P.C.
351 Sheetz Way, Claysburg, PA 16625 (814)239-6013

CONCRETE / ASPHALT TRANSITION DETAIL

SCALE: AS NOTED
DATE: 08/21/2020
DRAWN BY: DAH
FILENAME: DETAIL -A
ZZ

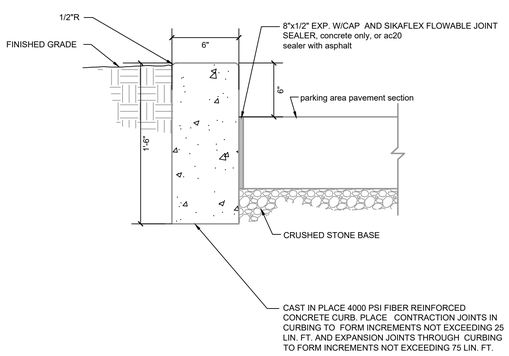

SITE AND STORE PERIMETER CURBING
SCALE: NO SCALE

2
C-502

DATE	BY	DESCRIPTION
REVISIONS		

Convenience Architecture and Design P.C.
351 Sheetz Way, Claysburg, PA 16625 (814)239-6013

SITE AND STORE PERIMETER CURBING

SCALE: AS NOTED
DATE: 8/28/2019
DRAWN BY: dah
FILENAME: DETAIL C
C

AIR/vacuum MACHINE PAD
SCALE: NO SCALE

air- VAC machine PAD NOTES:
ELECTRICAL NEEDS ARE (2) 120-VAC 30-AMP #10 WIRE CIRCUITS WITH GROUND

POWER CONDUIT FROM BUILDING TO AIR MACHINE IS TO BE RIGID PVC WITH FIRST AND LAST 10' IN RIGID METAL CONDUIT AND EYS FITTINGS AT BOTH ENDS. TERMINATED IN RECESSED 6" PVC SLEEVE UNDER AIR MACHINE.

LOOP FROM AIR STAND TO VACUUM WITH RIGID METAL CONDUIT ENDING IN RECESSED 6" PVC SLEEVE UNDER VACUUM. TERMINATION BUSHINGS TO BE INSTALLED AT BOTH ENDS.

USE WEDGE ANCHOR BOLTS TO MOUNT AIR STAND AND VACUUM

BOLLARDS ARE 4" X 4" X 5'. TO BE PAINTED DARK BRONZE. FOR INFORMATION CALL SHERWIN WILLIAMS ALTOONA, PA STORE (814) 946-6161

maximum distance from final grade to top button on air machine to be 48"

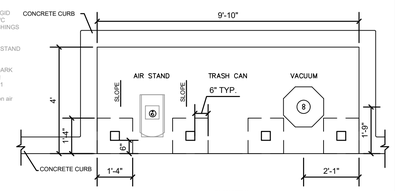

PLAN VIEW

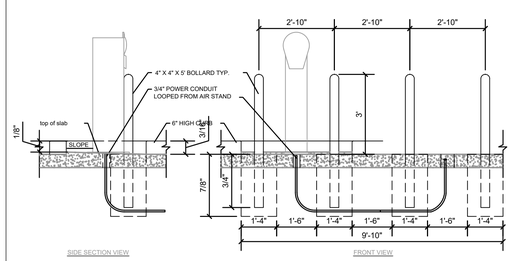

SIDE SECTION VIEW
FRONT VIEW

AIR MACHINE and vacuum PAD
SCALE: NO SCALE

5
C-502

DATE	BY	DESCRIPTION
REVISIONS		

Convenience Architecture and Design P.C.
351 Sheetz Way, Claysburg, PA 16625 (814)239-6013

AIR MACHINE/VACUUM PAD DETAIL

SCALE: AS NOTED
DATE: 7-24-17
DRAWN BY: AJR
FILENAME: DETAIL P
P

air machine PAD NOTES:
ELECTRICAL NEEDS ARE A 120-VAC 30-AMP #10 WIRE CIRCUITS WITH GROUND

POWER CONDUIT FROM BUILDING TO AIR MACHINE IS TO BE RIGID PVC WITH FIRST AND LAST 10' IN RIGID METAL CONDUIT AND EYS FITTINGS AT BOTH ENDS. TERMINATED IN RECESSED 6" PVC SLEEVE UNDER AIR MACHINE.

USE WEDGE ANCHOR BOLTS TO MOUNT AIR STAND.

BOLLARDS ARE 4" X 4" X 5'. TO BE PAINTED DARK BRONZE.

maximum distance from final grade to top button on air machine to be 48"

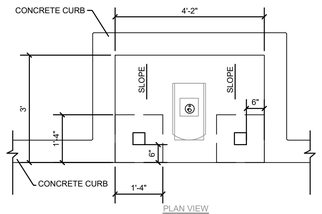

PLAN VIEW

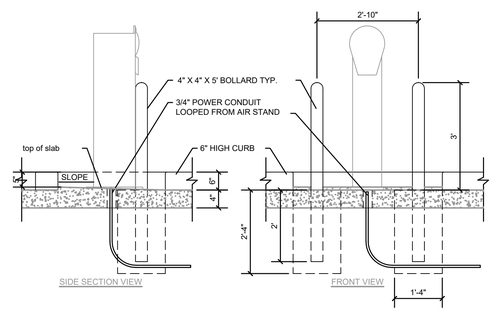

SIDE SECTION VIEW
FRONT VIEW

AIR MACHINE PAD
SCALE: NO SCALE

6
C-502

DATE	BY	DESCRIPTION
REVISIONS		

Convenience Architecture and Design P.C.
351 Sheetz Way, Claysburg, PA 16625 (814)239-6013

AIR MACHINE PAD DETAILS

SCALE: AS NOTED
DATE: 4-19-17
DRAWN BY: NMI
FILENAME: DETAIL E
E

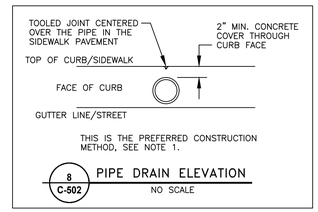

THIS IS THE PREFERRED CONSTRUCTION METHOD, SEE NOTE 1.

8
C-502

PIPE DRAIN ELEVATION
NO SCALE

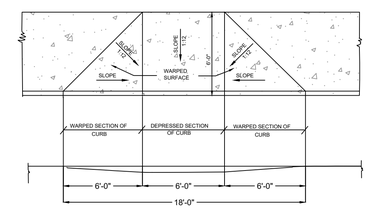

9
C-502

HANDICAPPED - RAMP DETAIL
NOT TO SCALE

STATE OF MARYLAND
DUSTIN MOORE
2045
REGISTERED
PROFESSIONAL ENGINEER
01/24/2022

Professional Certification:
I hereby certify that these documents were prepared or approved by me, and that I am a duly licensed professional under the laws of the State of: MARYLAND License #: 2045
Expiration Date 06-23-2023

FSA
FREDERICK, SEIBERT & ASSOCIATES, INC.
CIVIL ENGINEERS • SURVEYORS • LANDSCAPE ARCHITECTS • LAND PLANNERS
fsa-inc.com
128 SOUTH POTOMAC STREET HAGERSTOWN, MD 21740 301 739-8866
20 WEST BALTIMORE STREET GREENCASTLE, PA 17225 717-597-1407
555 SOUTH HANOVER STREET CARLISLE, PA 17013 717-243-9811
5201 SPRING ROAD SHERMANS DALE, PA 17090 717-582-8866

© 2021

MARK	DESCRIPTION	DATE

SHEETZ #145 - HAGERSTOWN

SITUATED AT 18717 LONGMEADOW ROAD
WASHINGTON COUNTY, MARYLAND

SHEETZ INC.
351 SHEETZ WAY CLAYSBURG, PA 16625

PROJECT NO.	7989.0
DWN BY: DUSTIN HORST	DATE: 10-06-2021
PROJECT MANAGER: DAVID TROSTLE	EMAIL: dave@fsa-md.com
TAX MAP - GRID - PARCEL	
SCALE	1"=20'

SHEET TITLE

CONSTRUCTION DETAILS- SITE

C-502
SHEET 11 OF 12

SP-21-031

P:\SHARED\FOLDERS\PROJECTS\7989\7989.1\PROFILE\7989.1-2 - CONSTRUCTION DETAILS - SITE.DWG - 1/24/2022

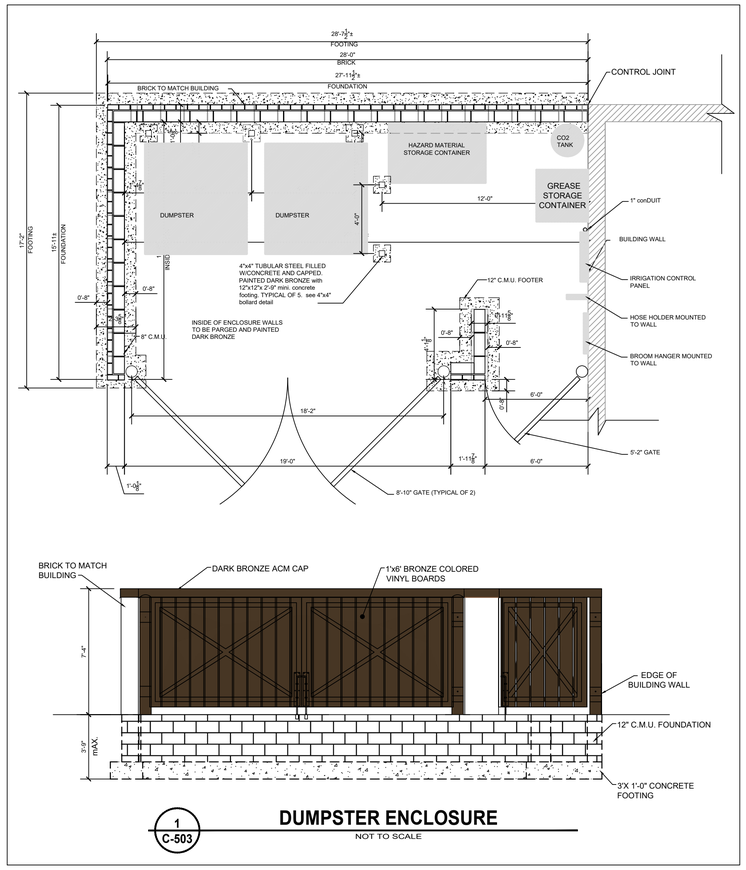

1 C-503

DUMPSTER ENCLOSURE

NOT TO SCALE

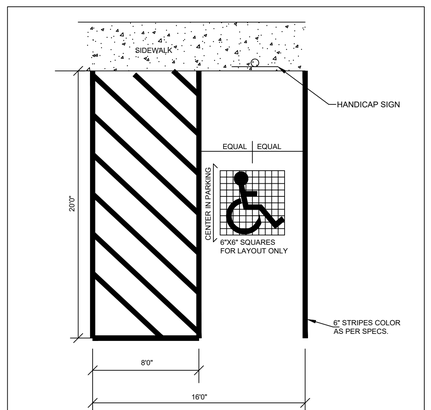

2 C-503

HANDICAPPED PARKING

NOT TO SCALE

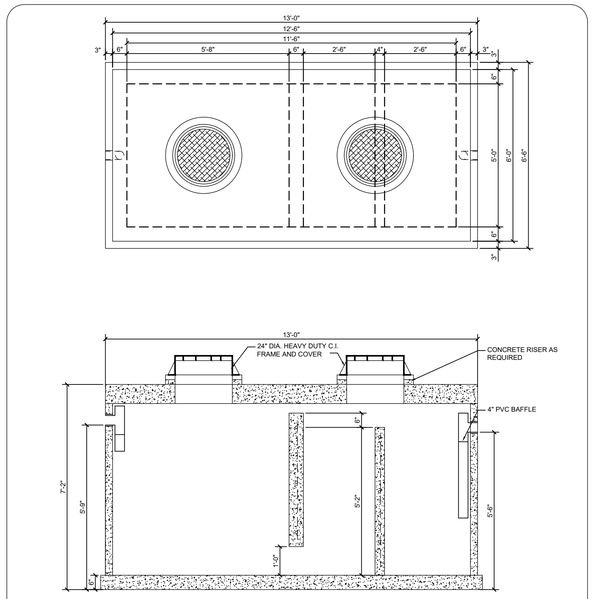

PRECAST CONCRETE 2000 GALLON GREASE INTERCEPTOR

SCALE: NO SCALE

3 C-503

DATE	BY	DESCRIPTION

REVISIONS

Convenience Architecture and Design P.C.

351 Sheetz Way, Claysburg, PA 16625 (814)239-6013

2000 GALLON PRECAST CONCRETE GREASE INTERCEPTOR

SCALE:	AS NOTED
DATE:	02-11-19
DRAWN BY:	MM
FILENAME:	DETAIL -02C

U

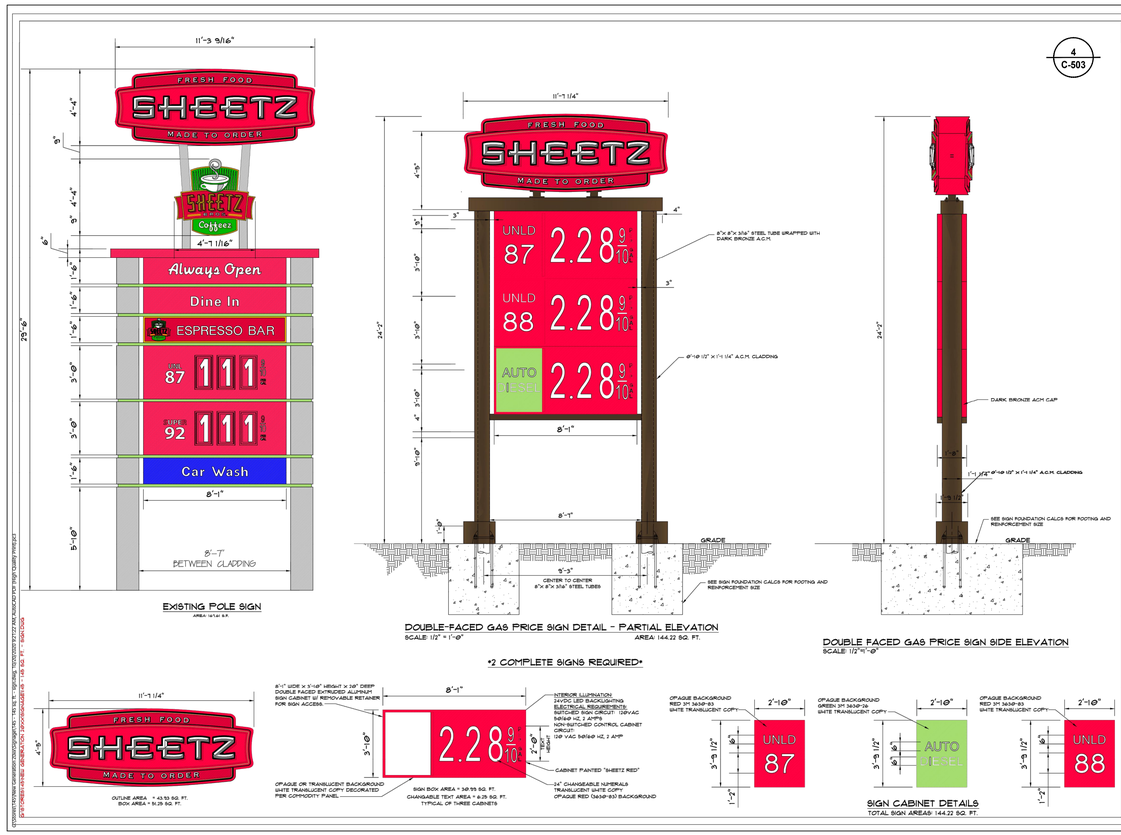

4 C-503

Convenience Architecture and Design P.C.
351 Sheetz Way, Claysburg, PA 16625
phone (814) 239-6013
email tcolumbus@sheetz.com
web site www.sheetz.com

PROJECT NAME:
SHEETZ STORE
#145
HAGERSTOWN

Int. of US Route 11 and Longmeadow Road Hagerstown Maryland

OWNER:
SHEETZ, INC.

5700 SIXTH AVE.
ALTOONA, PA 16602

CONSULTANT

PROFESSIONAL

KEYPLAN

MARK	DATE	DESCRIPTION

ISSUE: 09/24/2020
PROJECT NO.
AUTHOR BY: DAH
REVIEW BY:
SHEET TITLE

POLE SIGN DETAILS

SIGN

STATE OF MARYLAND
DAVID MOORE
No. 23245
REGISTERED PROFESSIONAL ENGINEER
01/24/2022

Professional Certification:
I hereby certify that these documents were prepared or approved by me, and that I am a duly licensed professional under the laws of the State of: MARYLAND License #: 23245
Expiration Date 06-23-2023

FSA
FREDERICK, SEIBERT & ASSOCIATES, INC.
CIVIL ENGINEERS • SURVEYORS • LANDSCAPE ARCHITECTS • LAND PLANNERS
128 SOUTH POTOMAC STREET HAGERSTOWN, MD 21740 301 739-8866
20 WEST BALTIMORE STREET GREENCASTLE, PA 17225 717 267-1907
305 SOUTH HANOVER STREET CARLISLE, PA 17013 717 243-8211
5201 SPRING ROAD SHERMANS DALE, PA 17090 717 582-8866
fsa-inc.com
© 2021

DATE:

MARK: DESCRIPTION:

SHEETZ #145 - HAGERSTOWN

SITUATED AT 18717 LONGMEADOW ROAD
WASHINGTON COUNTY, MARYLAND
SHEETZ INC.
351 SHEETZ WAY CLAYSBURG, PA 16625

PROJECT NO.	7989.0
DWN BY	DUSTIN HORST
DATE	10-06-2021
PROJECT MANAGER	DAVID TROSTLE
EMAIL	dave@fsa-md.com
TAX MAP - GRID - PARCEL	
SCALE	1"=20'

SHEET TITLE

CONSTRUCTION DETAILS- SITE

C-503
SHEET 12 OF 12

SP-21-031