REVISED AGENDA
WASHINGTON COUNTY PLANNING COMMISSION
100 W Washington Street, Room 2000
February 5, 2024, 6:00 PM

CALL TO** ORDER **AND ROLL CALL

NEW BUSINESS

MINUTES

1. January 8, 2024 Planning Commission public rezoning input meeting and regular meeting * *Discussion/Action*

MODIFICATIONS

1. **Washington County Public Works [OM-23-017]** – Misty Wagner-Grillo * *Discussion/Action*
   Modification request for the partial relief of the stream buffer requirements per the Subdivision Ordinance (Art. IV, Sec. 409); Location: 20025 Mt. Aetna Road; Zoning: RT (Residential Transition)

SITE PLAN

1. **North End Storage II – Phase 2 [SP-23-033]** – Scott Stotelmyer * *Discussion/Action*
   Proposal to add new storage units to an existing site; Location: 19729 Longmeadow Road; Zoning: BL (Business Local)
2. **Meritus School of Osteopathic medicine Graduate Student Housing [SP-23-034] –** Scott Stotelmyer * *Discussion/Action*
   Site plan for proposed student housing to support the adjacent Meritus School of Osteopathic Medicine; Location: 1546 Mt. Aetna Road; Zoning: RS (Residential Suburban) and ORI (Office, Research & Industry)

OTHER BUSINESS

1. **Update of Projects Initialized** – Jennifer Kinzer * *Information/Discussion*
2. **Comprehensive Plan Update** – Jill Baker * *Information/Discussion*

ADJOURNMENT

UPCOMING MEETINGS

1. February 12, 2024, 4:00 p.m. – Washington County Planning Commission Workshop meeting
2. March 4, 2024, 6:00 p.m. – Washington County Planning Commission regular meeting

*attachments

The Planning Commission reserves the right to vary the order in which the cases are called. Individuals requiring special accommodations are required to contact the Washington County Planning Department at 240-313-2430 to make arrangements no later than 10 working days prior to the meeting. Notice is given that the Planning Commission agenda may be amended at any time up to and including the Planning Commission meeting.

WASHINGTON COUNTY PLANNING COMMISSION
PUBLIC INPUT MEETING AND REGULAR MEETING
January 8, 2024

The Washington County Planning Commission held a public input meeting and its regular monthly meeting on Monday, January 8, 2024 at 6:00 p.m. at the Washington County Administrative Complex, 100 W. Washington Street, Room 2000, Hagerstown, MD.

CALL TO ORDER AND ROLL CALL

The Vice-Chairman called the meeting to order at 6:00 p.m.

Planning Commission members present were: David Kline, Vice-Chairman, Denny Reeder, Terrie Shank, Jeff Semler and Ex-officio County Commissioner Randy Wagner. Staff members present were: Washington County Department of Planning & Zoning: Jill, Baker, Director; Jennifer Kinzer, Deputy Director; Travis Allen, Senior Planner; Misty Wagner-Grillo, Planner; Scott Stotelmyer, Planner; and Debra Eckard, Administrative Assistant.

PUBLIC INPUT MEETING

RZ-23-008 Williamsport Storage Bins LLC

Staff Presentation

Mr. Allen presented a rezoning map amendment request for property located at 429 and 431 South Artizan Street, Williamsport. The applicant is requesting a change in zoning from HI – Highway Interchange to RT – Residential Transition of these parcels totaling .74 acre. These two parcels are currently undeveloped and are immediately adjacent to Green Lawn Cemetery. These parcels contain a large amount of floodplain, especially on the south side. Mr. Allen briefly discussed criteria which should be considered by the Planning Commission when making its recommendation for a change in the zoning.

Mr. Allen noted that the site is currently served by public water from the Town of Williamsport and public sewer from the County. No school mitigation would be required as part of the development of this site because the two parcels were subdivided prior to the effective date of the Adequate Public Facilities Ordinance. The area surrounding the site is predominately residential with a few exceptions. Mr. Allen stated the two parcels are within close proximity to numerous historic sites. The Williamsport Historic area contains 337 contributing resources.

Mr. Allen reminded members that the RT zoning district is described in the Zoning Ordinance "to provide appropriate locations for single-family and two-family residential development in the Urban and Town Growth Areas". The RT zoning district is intended to be the least dense residential zoning with two to four dwelling units per acre. The proposed request aligns with the 2002 Comprehensive Plan's Land Use Plan designation for these parcels. This policy designation is described as the main transitional classification from the urban to the rural areas.

Mr. Allen noted that in the case of a piecemeal rezoning, the applicant is tasked with providing proof that a substantial change has occurred in the character of the neighborhood or a mistake in the zoning of the parcel was made during the last comprehensive rezoning (2012). In this case, the applicant is claiming that a mistake was made in the zoning of this property in 2012. Mr. Allen briefly reviewed the criteria that should be presented by the applicant to support the change or mistake. Staff has reviewed the application which includes the applicant's justification for a mistake in the zoning and believes there is evidence to support the applicant's claim that a mistake was potentially made in applying the HI classification on the property in 2012.

No public comments have been received to date regarding this request. As a point of clarification, Mr. Allen stated that address of 431 South Artizan Street was part of a re-addressing that occurred in 2018 and is **not** part of this request. The parcel to the south of 429 South Artizan Street is vacant and is not currently addressed; however, it is part of this rezoning request.

Applicant's Presentation

Mr. Fred Frederick of Frederick, Seibert & Associates, the consultant, and Mr. Aaron Snook, the applicant, were both present at the meeting. Mr. Frederick noted that these two parcels were part of a larger commercial property; however, these two parcels were always separate lots. When the commercial property was sold, the applicant kept these two lots because they did not want it to be developed with an HI use. Mr. Frederick believes that the change that was not considered when the property was rezoned HI was the fact that the Snook family would not sell the lots. Mr. Frederick enumerated the criteria to be

considered when claiming a mistake in the zoning. He expressed his opinion that a mistake was made in the 2012 rezoning of the property but it was not intentional.

Public Comment

No public was present to make comments.

Motion and Vote: Mr. Semler made a motion to recommend approval of the request to the Board of County Commissioners. The motion was seconded by Mr. Reeder and unanimously approved with Commissioner Wagner abstaining from the vote.

The Vice-Chairman adjourned the public input meeting at 6:15 p.m.

REGULAR MEETING

NEW BUSINESS

MINUTES

Motion and Vote: Mr. Reeder made a motion to approve the minutes of the September 11, 2023 regular Planning Commission meeting as presented. The motion was seconded by Ms. Shank and unanimously approved.

Motion and Vote: Ms. Shank made a motion to approve the minutes of the December 4, 2023 regular Planning Commission meeting as presented. The motion was seconded by Mr. Semler and unanimously approved.

MODIFICATIONS

James and Staci Forrest [OM-23-015]

Ms. Wagner-Grillo presented a modification request to allow the approval of a one lot subdivision for a family member that does not meet road adequacy requirements per the Adequate Public Facilities Ordinance. The subject site is located along Clevelandtown Road, consists of 7.38 acres and is currently zoned Preservation. Ms. Wagner-Grillo noted that a memo from the Washington County Engineering Department states that Clevelandtown Road is not adequate for additional development. The property owner would be required to widen the road 16-feet in the front of the lot per requirements of the APFO.

Mr. Forrest stated that he intends to build a house on the lot for his parents. He stated that if they are required to widen the road, it would be cost prohibitive to build the house.

Motion and Vote: Ms. Shank made a motion to approve the modification request as presented. The motion was seconded by Mr. Reeder and unanimously approved.

Franklin and Pamela Thompson, Lot 1 [OM-23-016]

Ms. Wagner-Grillo presented a request to maintain the conventional setbacks in the A(R) district of 40-feet front, 15-feet side, and 50-feet rear yard versus imposing the Ag buffer setbacks of 50-feet from all property lines. The property is located at 13329 Edgemont Road. Ms. Wagner-Grillo explained that the applicant wants to subdivide a lot to construct a house for themselves. The Thompsons are currently farming the property which does not currently have an agricultural district designation; however, it is assessed as an agricultural land use.

Motion and Vote: Mr. Semler made a motion to approve the request as presented. The motion was seconded by Mr. Reeder and unanimously approved.

SITE PLANS

Grumbacker Lane, LLC [SP-23-022]

Mr. Stotelmyer presented for review and approval a site plan for a proposed gravel tractor trailer parking area located at 10319 Grumbacker Lane. The property is currently zoned PI (Planned Industrial). There

will be two access points from Industrial Lane. There will be no water or sewer service on the site. Lighting will be pole mounted. No signage is proposed on the site. Hours of operation will be 24 hours per day, 7 days per week. There will be 3.16 acres of forest retained on site to meet Forest Conservation requirements. All agency approvals have been received.

Motion and Vote: Mr. Reeder made a motion to approve the site plan as presented. The motion was seconded by Mr. Semler and unanimously approved.

OTHER BUSINESS

Update of Projects Initialized

Ms. Kinzer provided a written report for land development plan review projects initialized during the month of November which included 3 site plans.

Comprehensive Plan Update

Ms. Baker noted that the public meetings have been concluded. Staff is organizing all comments received to date. Agencies comments were forwarded to the Planning Commission in December and stakeholder comments were sent in January. Staff continues working on individual comments received. The consensus of the members present is to begin holding workshop meetings starting at 4 pm. Staff will begin working on a schedule for workshop meetings.

UPCOMING MEETINGS

1. Washington County Planning Commission regular meeting, February 5, 2024 at 6 p.m.

ADJOURNMENT

Ms. Shank made a motion to adjourn the meeting at 6:50 p.m. The motion was seconded by Mr. Semler and so ordered by the Vice-Chairman.

Respectfully submitted,

_____

David Kline, Vice-Chairman

WASHINGTON COUNTY DEPARTMENT OF PLANNING & ZONING
747 Northern Avenue | Hagerstown, MD 21742-2723 | P:240.313.2430 | F:240.313.2431 | Hearing Impaired: 7-1-1

ORDINANCE MODIFICATION STAFF REPORT

BASE INFORMATION

SITE NAME.....:	Regional Park Plat
NUMBER.....:	OM-23-017
OWNER.....:	Washington County BOCC
LOCATION.....:	20025 MOUNT AETNA Road HAGERSTOWN, MD 21742
DESCRIPTION.....:	Ordinance Modification for the partial relief of the Stream Buffer requirements per the Subdivision Ordinance. (Article IV, Section 409)
ZONING.....:	Residential, Transition
COMP PLAN LU.....:	Urban Open Space
PARCEL.....:	10031788
PLANNING SECTOR.....:	1
ELECTION DISTRICT.....:	10
TYPE.....:	
GROSS ACRES.....:	350.67
DWELLING UNITS.....:	
TOTAL LOTS.....:	1
DENSITY.....:	N/L Units Per Acre
PLANNER.....:	Misty Wagner-Grillo
ENGINEER.....:	WASHINGTON CO ENGINEERING
RECEIVED.....:	December 20, 2023

SITE ENGINEERING

HYDROGRAPHY, SENSITIVE & ENVIRONMENTAL INFORMATION

FLOOD ZONE.....:	Yes
WETLANDS.....:	Yes
WATERSHED.....:	Antietam Creek
ENDANGERED SPECIES.....:	State Listed
HISTORIC INVENTORY.....:	II0092 On National Register
EASEMENTS PRESENT.....:	None

SCHOOL INFORMATION

Staff Comments:
Not Applicable

	ELEMENTARY	MIDDLE	HIGH
SCHOOL DISTRICT	Greenbrier	Boonsboro	Boonsboro
PUPIL YIELD			
CURRENT ENROLLMENT			
MAXIMUM CAPACITY			

PUBLIC FACILITIES INFORMATION

FIRE DISTRICT.....:	Hagerstown
AMBULANCE DISTRICT.....:	Hagerstown

WATER & SEWER INFORMATION

	WATER	SEWER

WASHINGTON COUNTY DEPARTMENT OF PLANNING & ZONING
747 Northern Avenue | Hagerstown, MD 21742-2723 | P:240.313.2430 | F:240.313.2431 | Hearing Impaired: 7-1-1

METHOD.....:	City	City
SERVICE AREA.....:	City	City
PRIORITY.....:	3-Programmed Service	5-Long Term Planned Service
NEW HYDRANTS.....:		
GALLONS PER DAY SEWAGE...:		
PLANT INFO.....:		Hagerstown (City)

Washington County
MARYLAND

DEPARTMENT OF PLANNING & ZONING
PLANNING | ZONING | LAND PRESERVATION | FOREST CONSERVATION | GIS

WASHINGTON COUNTY PLANNING COMMISSION
APPLICATION FOR SUBDIVISION ORDINANCE MODIFICATION

APPLICANT

NAME Washington County Public Works (Andrew Eshleman)

MAILING ADDRESS 100 West Washington St. Suite 2400, Hagerstown, MD 21740

TELEPHONE 240-313-2257
(home) (work) (cell)

PROPERTY OWNER

NAME Washington County B.O.C.C.

MAILING ADDRESS 100 West Washington St. Room 1101, Hagerstown, MD 21740

TELEPHONE 240-313-2200
(home) (work) (cell)

CONSULTANT

NAME Washington County Division of Engineering (Alex Shifler)

ADDRESS 747 Northern Ave. Hagerstown, MD 21742

TELEPHONE 240-313-2404

DESCRIPTION OF PROPERTY

TAX ACCOUNT ID # (Required) 10-031788

PARCEL REFERENCE: MAP 50 GRID 22 PARCEL 04

PROPOSED LOT ACREAGE 105 AC & 245AC TOTAL SITE ACREAGE 350.67165

ZONING DISTRICT RT ROAD FRONTAGE (FT) 4,700 +/-

747 Northern Avenue | Hagerstown, MD 21742 | P: 240.313.2430 | F: 240.313.2431 | TDD: 7-1-1

LOCATION / ADDRESS
20025 Mt. Aetna RD, Hagerstown, Maryland 21742

EXISTING AND PROPOSED USE OF PROPERTY
County Park, Recreation & Municipal Golf Course

LOT TO BE CONVEYED TO IMMEDIATE FAMILY MEMBER
No, Retained by same entity. Plat to divide use classifications.

SUBDIVISION MODIFICATION INFORMATION

MODIFICATION TO SUBDIVISION ORDINANCE SECTION Article IV, Section 409

MODIFICATION IS TO ALLOW
Applicant is requesting partial relief from the streeam buffer requirements in the Washington County Subdivision Ordinance.

STATEMENT OF JUSTIFICATION TO THE REQUESTED MODIFICATION (quantify modification – i.e. hardship resulting from irregular shape; safety hazard; topographic conditions; extraordinary hardship; other

Plat titled Boundary Survey & Re-Plat Lands of B.O.C.C. of Washington County, MD, Black Rock Golf Course and Regional Park currently in the Plan Review process as project S-22-010 is the initial step in a larger project intended to expand the open space opportunities in the existing county park. - Please see attached Documents

A - Justification Letter

B - Anacostia Trail Map

C - Concept Plan

D - Coversheet (Drawing No. 22-074)

(Attach additional sheets if necessary)

In addition, twelve (12) sketch plans, drawn to scale must accompany this application showing: the dimensions and shape of proposed lot with acreage; size and location of existing and/or future structures; existing/proposed roadways and associated access rights-of-way or easements; existing/proposed entrance/exit to property; natural or topographic peculiarities of the lot in question.

To the best of my knowledge, the information provided in this application and other material submitted is correct.

12/19/23

Applicant's Signature Date

12/19/23

Property Owner's Signature Date

STAFF USE ONLY:

STAFF PLANNER: _____ DATE RECEIVED: _____

NUMBER: _____

MEETING DATE: _____

PROCEDURE FOR REQUESTS FOR A MODIFICATION TO THE STANDARDS OF THE SUBDIVISION ORDINANCE

1. Modification request applications shall be filed with the Washington County Department of Planning & Zoning, Washington County Administrative Annex, 747 Northern Avenue, Hagerstown, Maryland 21742, Phone: 240-313-2430, between the hours of 7:30 a.m. and 4:30 p.m., Monday through Friday. Copies of the application forms can be picked up at this location or can be printed from the following: https://www.washco-md.net/wp-content/uploads/planrev-AppSubdOrdMods.pdf. A Filing fee of $115.00 dollars should be submitted when no engineering / outside agency review is required. A filing fee of $265.00 is required when multiple agency review is necessary, and can be paid by cash or check made payable to the Washington County Treasurer. Incomplete applications will not be accepted.

2. The Planning Commission meets on a monthly basis on the second floor of the County Administration Building, 100 West Washington Street, Room 2000, Hagerstown, Maryland. Meetings begin promptly at 7:00 p.m. The Planning Commission reserves the right to cancel and/or change the meeting dates and time as needed. Applications must be filed at least 25 days prior to the scheduled meeting of the Planning Commission.

3. Upon receipt of the modification application, the Planning & Zoning Staff will review for completeness and then set up an individual file for the application. Once review is complete, the assigned Planner will present the modification request to the Planning Commission at its regularly scheduled meeting. The Commission will take action the night of the meeting unless more information for review is requested. Staff would then schedule the modification request for a future Planning Commission meeting.

4. In requesting a modification from Subdivision Ordinance regulations, the Applicant and/or their Consultant should be prepared to tell the Planning Commission why the property is unique or the minimum terms of the Ordinance that cannot be complied with. A modification may only be granted by the Commission upon a showing of criteria of practical difficulty or undue hardship listed below (but not limited to):

(a) There are special circumstances or conditions affecting the property such that the strict application of the provisions of the Subdivision Ordinance would deprive the applicant of the reasonable use of their land.

(b) The hardship is not the result of the applicant's own actions – that is, special circumstances or conditions causing the hardship exist through no fault of the property owner.

(c) Granting the modification would be in harmony with the general purpose of the Ordinance and preserve its spirit.

(d) That the modification is to correct inequities resulting from a physical hardship such as topography.

(e) The granting of the modification will not be detrimental to the public health, safety and welfare or injurious to other property in the territory in which property is situated.

5. The Director of the Department of Planning & Zoning shall have the authority to consider administratively the following modifications from Subdivision Ordinance requirements:

(a) Where it is impractical to dedicate the full right-of-way required by Washington County Plan Review or State Highway Administration are satisfied with the acquired right-of-way.

(b) Where the existing structure, septic system, or other appurtenance is within the right-of-way to be dedicated and for which the relocation of same may create a future hardship.

(c) When the property access or driveway intersects with a State maintained road and the access permit issued by the State requires the property access or driveway to be located such that it fails to meet the Subdivision Ordinance spacing requirements. The Director can grant a modification from the County's Highway Plan spacing requirements up to 25% from the current spacing requirements if: a physical hardship or safety condition is identified; does not create a condition which allows for more lots than would be permitted if the modification was not granted; location must be approved by Planning & Zoning and/or State Highway; and have no negative impact on neighboring properties.

(d) Panhandle Length – based upon a physical hardship, no negative impact on neighboring properties; and the local fire department concurs with site.

(e) Public Road Frontage – Up to 25% from the current standard of 25 feet based upon a physical hardship, safety condition, existing condition where there is less than 25 foot of frontage identified. The driveway geometry associated with the new frontage/access configuration shall be approved by County Planning & Zoning and/or State Highway Administration. There is no negative impact on neighboring properties.

(f) The Director of the Department of Planning & Zoning shall have the ability to grant the creation of a lot without road frontage in those cases where the proposed subdivided lot(s) contain existing structures and an attempt is being made to comply with the Zoning Ordinance provision of one principle use on one zoning lot.

6. On the submitted Preliminary and Final Subdivision Plat, include modification reference number, description of modification request and approval, any conditions and the date request was granted by the Planning Commission. Submit modification approval letter with plat submittal.

7. Appeal by any person aggrieved from any action of the Planning Commission or the Director of the Department of Planning & Zoning shall be to the Board of Zoning Appeals pursuant to the provisions of Article 25 of the Washington County Zoning Ordinance. (Section 109 – Subdivision Ordinance). You may contact the Board of Appeals at the County Administrative Annex, 747 Northern Avenue, Hagerstown, Maryland 21742: Phone: 240-313-2430: https://www.washco-md.net/planning-zoning/zoning-appeals/.

SUBDIVISION MODIFICATION APPLICATION CHECKLIST

The following items are required as part of the Subdivision Modification application:

Applicant	Staff	
✓		A complete Application Form, signed by the applicant, property owner, and consultant (if applicable). All information must be typed or clearly printed on the application. **Please include this checklist**.
ASKING FOR WAIVER		A filing fee of $115.00 when no Engineering or outside agency review Is required. A fee of $265.00 is required when multiple agency reviews are required. Make check payable to: **Washington County Treasurer.** Include fee worksheet.
✓		Twelve (12) sketch plans, drawn to scale, showing:
✓		a. dimensions & shape of proposed lot with acreage;
✓		b. size & location of existing and/or future structures;
✓		c. existing/proposed roadways and associated access right of way or easements;
✓		d. existing/proposed entrance/exit to property;
✓		e. natural or topographic peculiarities of the lot in question.
✓		Any additional drawings, pictures, or information that will assist the Planning Commission in making its decision.

Attachment A

Statement of Justification:

We are seeking relief from the stream buffer subdivision ordinance requirement (Article IV, Section 409). Washington County has received two grants, a $340,000 Land and Water Conservation Fund (LWCF) and a $120,000 Recreation Trails Grant to construct approximately 2 miles of multipurpose trails. As a condition of the Land and Water Conservation Fund, the grant desires a separation of the open space park lands from the revenue generating Black Rock Golf Course. Washington County has submite d a Plat titled Boundary Survey & Re-Plat Lands of B.O.C.C. of Washington County, MD, Black Rock Golf Course and Regional Park that is currently in the Plan Review process as project S-22-010. This plat is the initial step in the larger forthcoming site plan for the trail network. Additional walking and biking recreational opportunities are the #1 requested amenity to be added into the County's park system and the trail network will provide this to Washington County citizens. An 8 ft wide paved trail will connect from the existing developed Regional Park to a new parking trailhead area on Landis Road. Additional gravel trails will be installed to provide a looped trail network. The paved pathway will serve as the required "Accessible Pathway" for meeting the Accessibility Standards for Outdoor Developed Areas (required for LWCF grant).

According to the subdivision ordinance standards and the drainage area sizes, there would be two tributaries that would trigger a stream buffer. A field analysis and engineering investigation has been completed of the entire property including these drainage areas. The Regional Park and Black Rock Golf course are developed areas and previously altered the existing waterways. What exists presently, as shown in the photo is a drainage pathway and not undisturbed natural areas. Furthermore, a field investigation reveals no established defined channels or baseflow indicating any seasonal stream conveyance or reason to provide this level of protection.

Placing stream buffers on these areas and shifting the pathway outside of the buffer would impact the adjacent soccer field and make it too narrow. Currently there is no American with Disability Act accessible pathway to the fields which is a deficiency that needs corrected. There simply isn't enough space to accommodate the existing field, trail and buffer. It is proposed that the trail would be located away from the local low point elevation as a point of practical design but will not be able to achieve the full 26 ft buffer offset.

Locating recreational trails in floodplains and stream buffers is a common practice in many jurisdictions and considered an appropriate low impact use. Many examples such as the extensive Anacostia Tributary Trail System are located almost exclusively in floodplains. Exclusion of such a use by encumbering with a stream buffer, which is a lower environmental impact risk than a floodplain is not appropriate, and any potential impacts can be addressed through the design process. The presence of a stream buffer on these locations from an upcoming site plan approval standpoint would complicate this process as the stream buffers encumber the property and would exclude the trail development as proposed from occurring.

For these reasons we are requesting relief from including the stream buffers on the plat to allow the concept trail layout and design to proceed as proposed.

Reference Area – Existing conditions looking South; Soccer Field on Right and Golf Course on Left.

No observable stream channel.

Attachment D

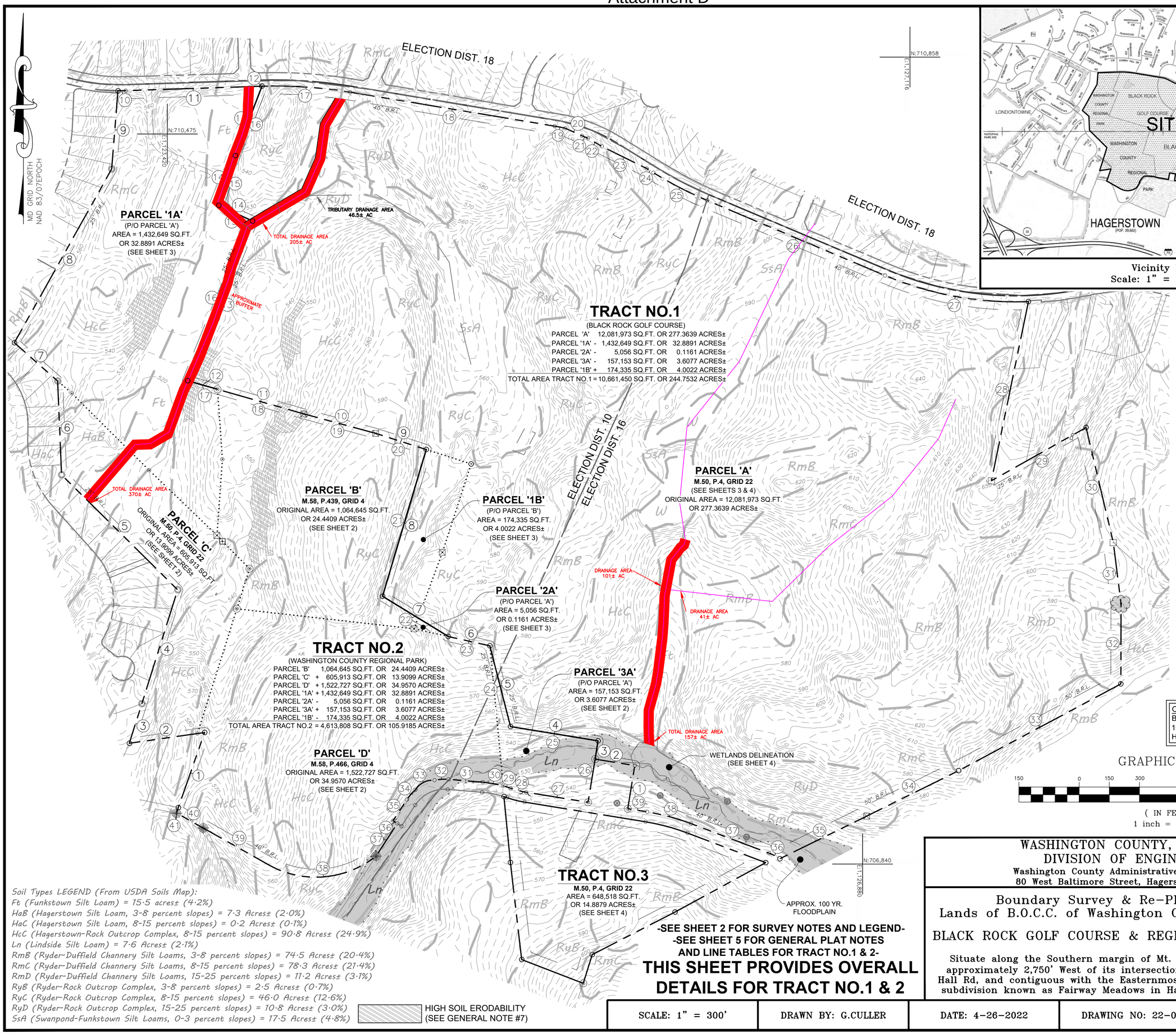

Vicinity Map
Scale: 1" = 2000' ±

PLAT NO. _____

DATE:

WASHINGTON COUNTY

OWNER:
B.O.C.C. OF WASHINGTON COUNTY, MD
100 W WASHINGTON STREET
HAGERSTOWN, MD 21740

GRAPHIC SCALE

150 0 150 300 600 1200

(IN FEET)
1 inch = 300 ft.

Soil Types LEGEND (From USDA Soils Map):
Ft (Funkstown Silt Loam) = 15·5 acres± (4·2%)
HaB (Hagerstown Silt Loam, 3-8 percent slopes) = 7·3 Acres± (2·0%)
HaC (Hagerstown Silt Loam, 8-15 percent slopes) = 0·2 Acres± (0·1%)
HcC (Hagerstown-Rock Outcrop Complex, 8-15 percent slopes) = 90·8 Acres± (24·9%)
Ln (Lindside Silt Loam) = 7·6 Acres± (2·1%)
RmB (Ryder-Duffield Channery Silt Loams, 3-8 percent slopes) = 74·5 Acres± (20·4%)
RmC (Ryder-Duffield Channery Silt Loams, 8-15 percent slopes) = 78·3 Acres± (21·4%)
RmD (Ryder-Duffield Channery Silt Loams, 15-25 percent slopes) = 11·2 Acres± (3·1%)
RyB (Ryder-Rock Outcrop Complex, 3-8 percent slopes) = 2·5 Acres± (0·7%)
RyC (Ryder-Rock Outcrop Complex, 8-15 percent slopes) = 46·0 Acres± (12·6%)
RyD (Ryder-Rock Outcrop Complex, 15-25 percent slopes) = 10·8 Acres± (3·0%)
SsA (Swanpond-Funkstown Silt Loams, 0-3 percent slopes) = 17·5 Acres± (4·8%)

HIGH SOIL ERODABILITY
(SEE GENERAL NOTE #7)

-SEE SHEET 2 FOR SURVEY NOTES AND LEGEND-
-SEE SHEET 5 FOR GENERAL PLAT NOTES
AND LINE TABLES FOR TRACT NO.1 & 2-

THIS SHEET PROVIDES OVERALL DETAILS FOR TRACT NO.1 & 2

WASHINGTON COUNTY, MARYLAND
DIVISION OF ENGINEERING
Washington County Administrative Annex Building
80 West Baltimore Street, Hagerstown, MD 21740

Boundary Survey & Re-Plat
Lands of B.O.C.C. of Washington County, MD

BLACK ROCK GOLF COURSE & REGIONAL PARK

Situate along the Southern margin of Mt. Aetna Road, approximately 2,750' West of its intersection with White Hall Rd, and contiguous with the Easternmost lines of the subdivision known as Fairway Meadows in Hagerstown, MD

SCALE: 1" = 300'	DRAWN BY: G.CULLER	DATE: 4-26-2022	DRAWING NO: 22-074	SHEET NO: 1 OF 5

Regional Park Trail Network Concept Plan

Attachment C

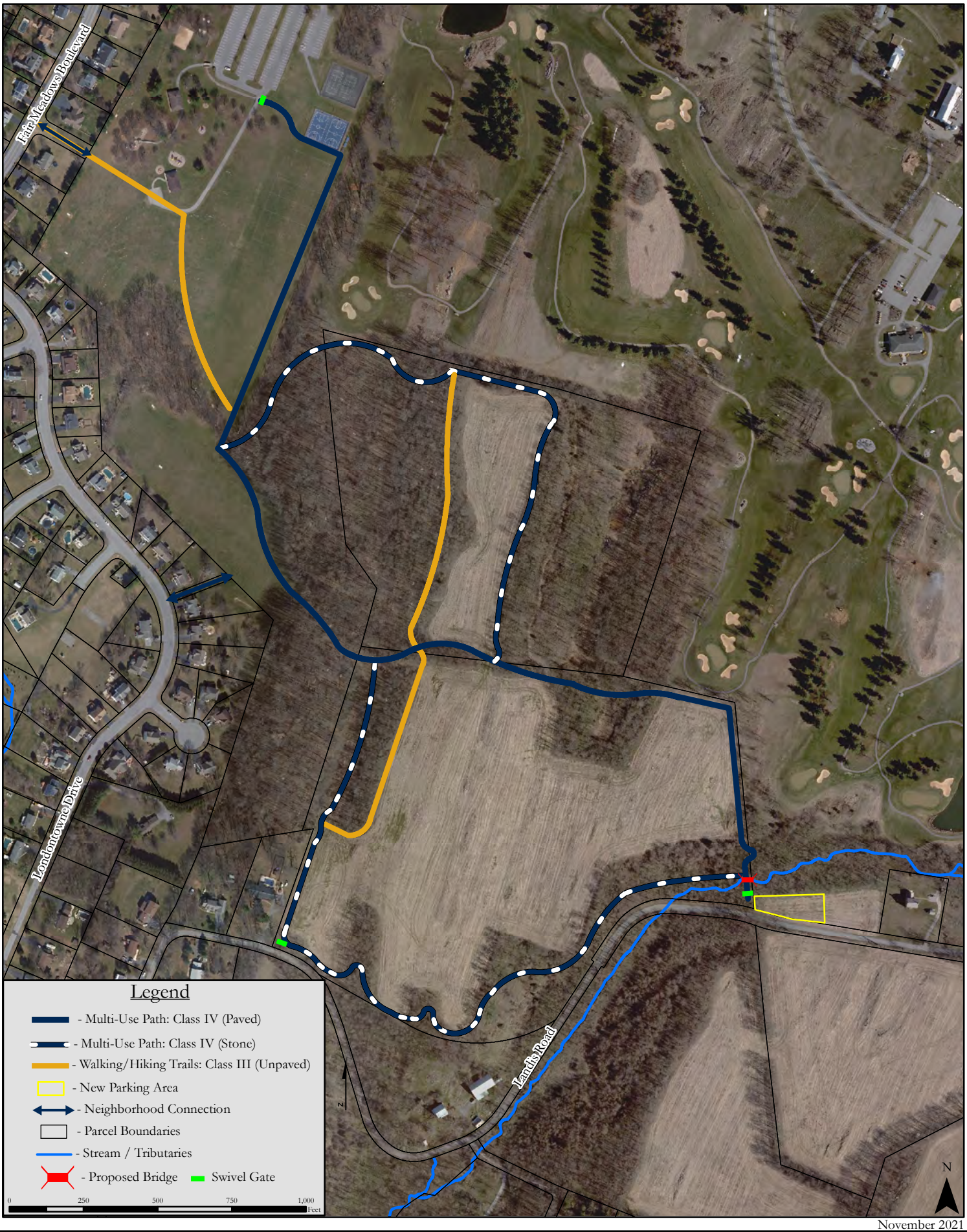

November 2021

Attachment B

Anacostia Tributary Trail System

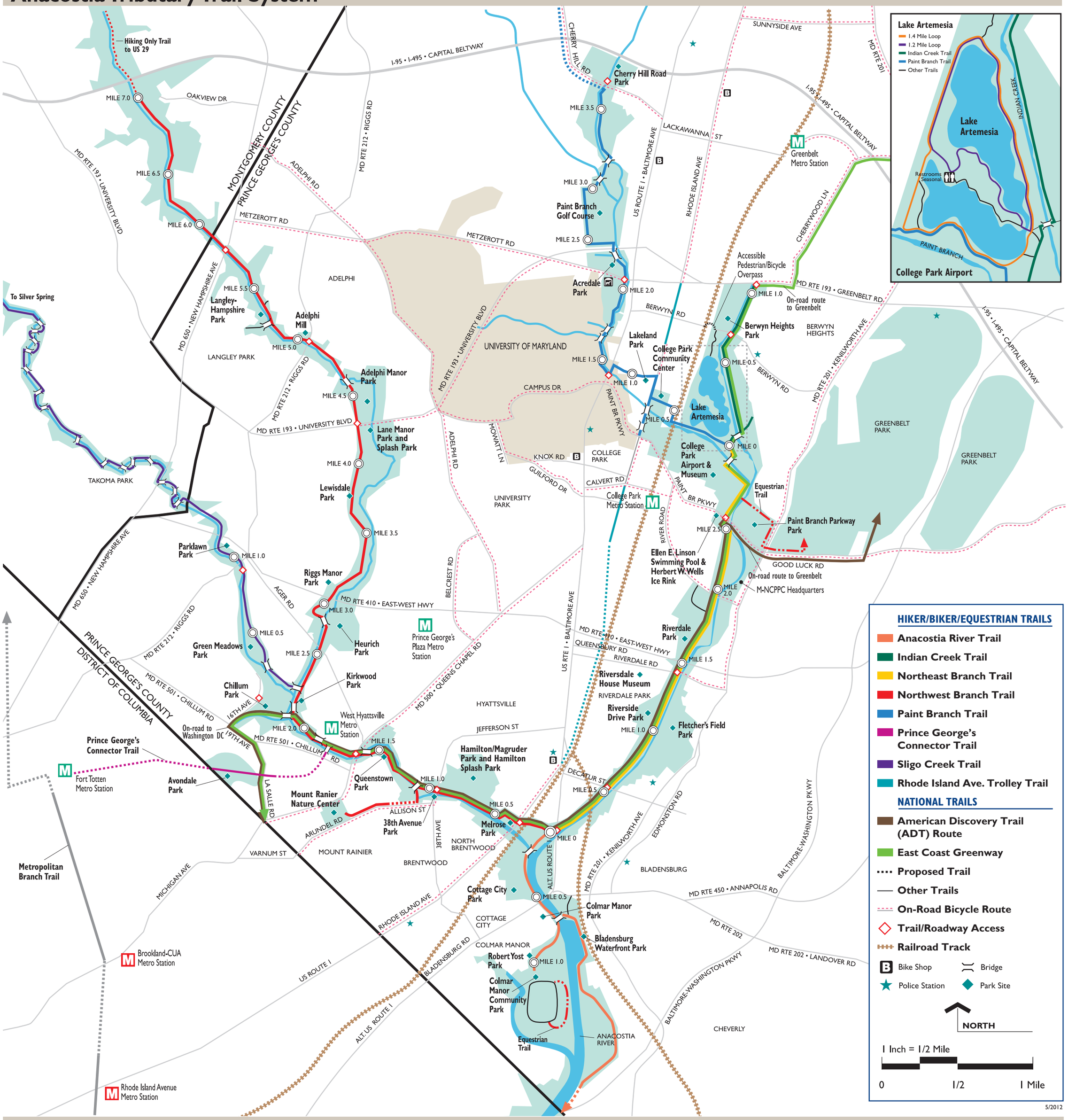

TIPS FOR TRAIL SAFETY

SMART TRAIL USE includes adherence to some basic safety practices. Trails are shared recreation amenities and are accessed by a variety of users at the same time. Please be courteous to all users, and remember that pedestrians have the right-of-way. All trail users should stay to the right on the trail.

- Always follow posted regulations.
- Do not litter. Place trash in receptacles.
- Bicyclists should pull off the trail when stopping to avoid a potential accident.
- Bicyclists approaching pedestrians should make an advanced noise using voice, bell, or horn to avoid startling walkers.
- Carry a cell phone.
- Bicyclists should always wear helmets and ride at speeds that do not exceed 12 miles per hour.
- Horses should be kept on the grass shoulder, when possible.
- With the exception of motorized wheelchairs, motorized vehicles are not allowed on the trails.
- Pets should be kept on a short leash and people must clean up after their pets.
- Be sure to carry identification (which includes name, phone number, and pertinent medical information), and record your bicycle serial number.
- Never wear headsets.
- Wear reflective material and carry a whistleor noisemaker.
- Prior to using trails, familiarize yourself with the trail and plan your route.
- Tell friends or family the route you'll be taking and travel with a partner when possible.
- Avoid unfamiliar areas when on the trails alone.
- Stay alert, be observant about your surroundings and avoid areas where visibility is poor.
- Use discretion when acknowledging strangers, and follow your intuition about unfamiliar people and areas.
- When on roadways, remember to ride with traffic but walk and run against traffic.
- Carry tools for minor repairs, if possible. Have supplies to change a flat tire when biking.
- Trails are available for use from sunrise to sunset each day.

Park Police: 301-459-3232
TTY 301-459-3051

Parks & Recreation M-NCPPC
live more, play more

SP-23-033 North End Storage

-Presented is a site plan to add new storage units to an existing site.

-The site is located at 19729 Longmeadow Road in Hagerstown.

-There will continue to be one access point to the site from Longmeadow Road

-Parking required for the site is 5 spaces, and 9 will be provided

-No proposed water or sewer

-Hours of operation will be 24 hours a day, 7 days a week

-Lighting will be building mounted

-There will be no additional signage

-Forest Conservation will be met by an off site easement.

-All agency approvals received

WASHINGTON COUNTY DEPARTMENT OF PLANNING & ZONING
747 Northern Avenue | Hagerstown, MD 21742-2723 | P:240.313.2430 | F:240.313.2431 | Hearing Impaired: 7-1-1

SITE PLAN STAFF REPORT

BASE INFORMATION

SITE NAME.....:	North End Storage II - Phase 2
NUMBER.....:	SP-23-033
OWNER.....:	OLIVER JOHN R COMPANY INC
LOCATION.....:	19729 LONGMEADOW Road Hagerstown, MD 21742
DESCRIPTION.....:	New Storage Units
ZONING.....:	BL; RS Refer to Map
COMP PLAN LU.....:	Low Density Residential
PARCEL.....:	18002663
PLANNING SECTOR.....:	1
ELECTION DISTRICT.....:	18
TYPE.....:	Commercial
GROSS ACRES.....:	7.48
DWELLING UNITS.....:	0
TOTAL LOTS.....:	0
DENSITY.....:	0 Units Per Acre
PLANNER.....:	Scott A Stotelmyer
ENGINEER.....:	TRIAD ENGINEERING
RECEIVED.....:	September 6, 2023

SITE ENGINEERING

HYDROGRAPHY, SENSITIVE & ENVIRONMENTAL INFORMATION

FLOOD ZONE.....:	No
WETLANDS.....:	None
WATERSHED.....:	Antietam Creek
ENDANGERED SPECIES.....:	None
HISTORIC INVENTORY.....:	No Resources Present
EASEMENTS PRESENT.....:	SP-19-001

SITE DESIGN

Impervious Area Plan	**Impervious Maximum Allowed**	**Open Space Area Planned**
Staff Comments:		
Open Space Minimum Required	**Residential Amenity Plans**	**Solid Waste Disposal Plans**
Not Applicable		
Materials Stored on Site	**Buffer Design Meets Requirements**	**Landscaping Meets Requirements**
Lighting Plan Meets Requirements	**Pedestrian Access is Adequate**	**Bus Stop is Within Walking Distance**
Loading Area Meets Requirements		
Parking Spaces - Total Planned	**Parking Spaces - Per Dwelling Unit**	
Parking Spaces - Minimum Required	**Recreational Parking Provided**	

Not Fast Track

WASHINGTON COUNTY DEPARTMENT OF PLANNING & ZONING
747 Northern Avenue | Hagerstown, MD 21742-2723 | P:240.313.2430 | F:240.313.2431 | Hearing Impaired: 7-1-1

SCHOOL INFORMATION

	ELEMENTARY	MIDDLE	HIGH
SCHOOL DISTRICT	Paramount	Northern	North Hagerstown
PUPIL YIELD			
CURRENT ENROLLMENT			
MAXIMUM CAPACITY			

PUBLIC FACILITIES INFORMATION

FIRE DISTRICT.....:	LONG MEADOW
AMBULANCE DISTRICT.....:	MAUGANSVILLE

WATER & SEWER INFORMATION

	WATER	SEWER
METHOD.....:	City	County Line - City Treatment
SERVICE AREA.....:	City	County Line - City Treatment
PRIORITY.....:	3-Programmed Service	5-Long Term Planned Service
NEW HYDRANTS.....:		
GALLONS PER DAY SEWAGE...:		
PLANT INFO.....:		Hagerstown (City)

NORTH END STORAGE II - PHASE 2

LOCATED AT:
19729 LONGMEADOW ROAD

LOCATION MAP:

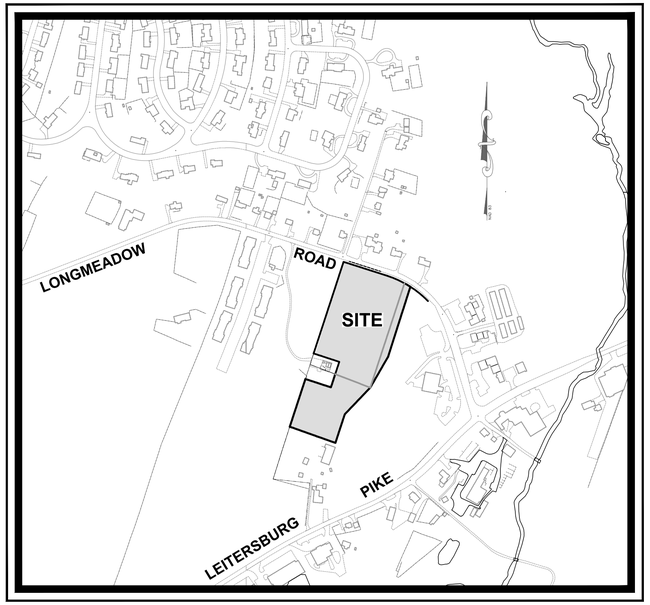

SCALE: 1" = 400'

SITE DATA:

TYPE OF USAGE:	COMMERCIAL
ACREAGE PER DEED:	4.83 ACRES PER DEED 7.48 ACRES TOTAL PENDING
ZONING:	BL - BUSINESS LOCAL
PHYSICAL ADDRESS:	19729 LONGMEADOW ROAD HAGERSTOWN, MD. 21742
PURPOSE OF PLAN:	NEW STORAGE UNITS
STORMWATER QUALITY:	PROVIDED BY ESD PRACTICES
STORMWATER QUANTITY:	ESD PRACTICES
EXCISE TAX CLASSIFICATION:	NONRESIDENTIAL NONRETAIL

PROJECT CONTACTS:

OWNER:	JOHN R. OLIVER CO., INC.
MAILING ADDRESS-	19733 LEITERSBURG PIKE HAGERSTOWN, MD 21742
PHONE-	301-797-0000
CONTACT-	MARK OLIVER
DEVELOPER:	JOHN R. OLIVER CO., INC.
MAILING ADDRESS-	19733 LEITERSBURG PIKE HAGERSTOWN, MD 21742
PHONE-	301-797-0000
CONTACT-	MARK OLIVER

SHEET INDEX:

1. COVER SHEET C.1.0
2. LEGEND & GENERAL SITE NOTES C.1.1
3. EXISTING CONDITIONS C.2.0
4. SITE PLAN C.3.0
5. SITE DETAILS C.4.0
6. LANDSCAPE PLAN & DETAILS C.5.0
7. EROSION AND SEDIMENT CONTROL PLAN C.6.0
8. EROSION AND SEDIMENT CONTROL NOTES AND DETAILS C.6.1
9. STORMWATER MANAGEMENT PLAN - BIORETENTION C.7.0
10. STORMWATER MANAGEMENT PLAN - BIORETENTION C.7.1
11. STORMWATER MANAGEMENT NOTES AND DETAILS C.7.2
12. STORMWATER MANAGEMENT ACCESS EASEMENT C.7.3
13. SOIL BORING LOGS C.7.4
14. STORM DRAIN PLAN & PROFILE, NOTES AND DETAILS C.8.0
15. SITE PLAN-PHOTOMETRICS PH-1

STORMWATER MANAGEMENT SUMMARY TABLE

PROJECT NAME: NORTH END STORAGE II, PHASE 2
COUNTY PROJECT No. (SP,PP,GP): SP-23-033

ESD PRACTICES (CHAPTER 5 -STRUCTURAL & NON-STRUCTURAL)

TYPE	No.	DA (ACRES) (TO STRUCTURE)	IMPERVIOUS DA (acres) (TO STRUCTURE)	RCN	ESDv (c.f. / ac-ft)	WQv(ac-ft)	CPv(ac-ft)	CPv(cfs) (DISCHARGE)	Rev (ac-ft)
A-2	1	0.321	0.321	55	2,742/0.063	-	PROVIDED W / ESD	PROVIDED W / ESD	PROVIDED W / ESD
A-2	2	0.646	0.646	55	5,517/0.127	-	PROVIDED W / ESD	PROVIDED W / ESD	PROVIDED W / ESD
M-6	3	0.374	0.160	55	1,412/0.032	-	PROVIDED W / ESD	PROVIDED W / ESD	PROVIDED W / ESD

NON-ESD PRACTICES (CHAPTER 3 -STRUCTURAL PRACTICES)

TYPE	No.	DA (ACRES) (TO STRUCTURE)	IMPERVIOUS DA (acres) (TO STRUCTURE)	RCN	STORAGE @DHW (ac-ft)	PRINCIPLE SPILLWAY TYPE	PRINCIPLE SPILLWAY Size-(inches)	CPv(cfs) (DISCHARGE)	Qp10 (cfs)	Qf_{100} (cfs)
F-6	1	1.22	0.73	55	0.131	RISER	96	0	0.316	-
F-6	2	1.33	0.509	55	0.105	RISER	96	0	0.144	5.37

TOTAL DA (SITE)	3.71 ACRES		
CONSTRUCTION TYPE (CIRCLE ONE)	NEW	REDEVELOPMENT	RESTORATION

The required Environmental Site Design (ESD) and Stormwater Management for this project are being accounted for by the ESD Practice BMPS A-2 Permeable Pavements AND M-6 Micro-Bioretention Areas per Revised Chapter 5 of the 2000 Maryland Stormwater Management Ordinance AND F-6 Bioretention Structures per Chapter 3. Computations indicate the no change in the Pre-Post Development Peak Storms after being routed through the SWM BMP structures. See these plan and the supplemental "Final SWM and Erosion Sediment Control Design Report" for all supporting information.

VICINITY MAP:

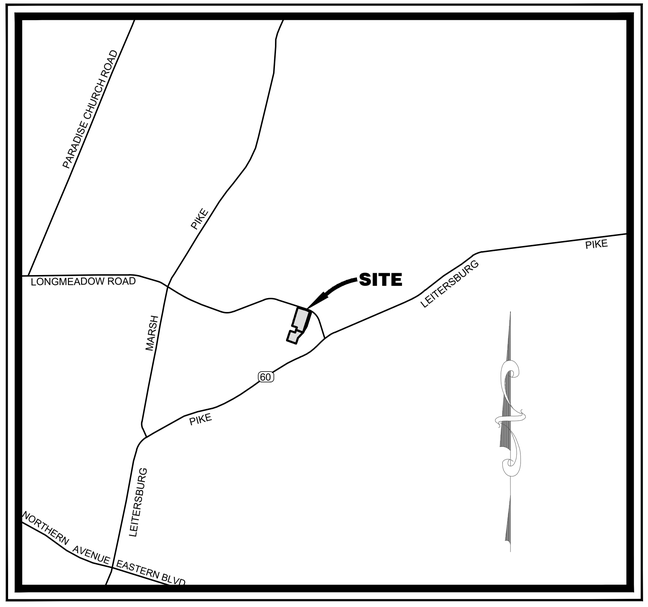

ADC MAP No: 10
GRID: 11K
SCALE: 1"=2,000'

CERTIFICATIONS:

OWNER/DEVELOPER'S CERTIFICATION

I/WE HEREBY CERTIFY THAT ALL CLEARING, GRADING, CONSTRUCTION AND/OR DEVELOPMENT WILL BE DONE PURSUANT TO THIS PLAN AND IN ACCORDANCE WITH THE STORMWATER MANAGEMENT ORDINANCE OF WASHINGTON COUNTY AND THE POLICY ON CONSTRUCTION OF SUBDIVISION INFRASTRUCTURE FOR ACCEPTANCE AND OWNERSHIP BY WASHINGTON COUNTY (S-3).

12/5/2023 — Mark B. Oliver
DATE — PRINTED NAME — SIGNATURE

WASHINGTON COUNTY
DIVISION OF ENGINEERING
GRADING & STORMWATER
MANAGEMENT PLAN -
APPROVAL STAMP HERE

OWNER/DEVELOPER'S CERTIFICATION

I/WE CERTIFY ALL/ANY PARTIES RESPONSIBLE FOR CLEARING, GRADING, CONSTRUCTION, AND/OR DEVELOPMENT WILL; BE DONE PURSUANT TO THIS PLAN AND RESPONSIBLE PERSONNEL INVOLVED IN THE CONSTRUCTION PROJECT WILL HAVE A CERTIFICATE OF TRAINING AT A MARYLAND DEPARTMENT OF THE ENVIRONMENT APPROVED TRAINING PROGRAM FOR THE CONTROL OF SOIL EROSION AND SEDIMENT.

12/5/2023 — Mark B. Oliver
DATE — PRINTED NAME — SIGNATURE

WASHINGTON COUNTY SOIL
CONSERVATION DISTRICT
SOIL EROSION AND SEDIMENT
CONTROL PLAN APPROVAL
STAMP HERE

ENGINEER'S STORM WATER MANAGEMENT CERTIFICATION

I VERIFY AND AFFIRM THAT THE CONSTRUCTION FOR THE STORMWATER MANAGEMENT FACILITIES AS PERFORMED EITHER MEETS OR EXCEEDS THE REQUIREMENTS AND DESIGN INTENT OF THIS PLAN, INCLUDING ALL SPECIFICATIONS AND REFERENCED STANDARDS, AND HAS BEEN COMPLETED IN ACCORDANCE WITH GOOD CONSTRUCTION PRACTICES. I ALSO VERIFY AND AFFIRM THAT I HAVE REVIEWED THE CONSTRUCTION INSPECTION DOCUMENTATION AND THE AS-BUILT INFORMATION; THAT IT HAS BEEN DONE IN ACCORDANCE WITH WASHINGTON COUNTY REQUIREMENTS AND AT A LEVEL DEEMED NECESSARY TO ASSURE THE VERIFICATION MADE HEREIN; AND ALL DISCREPANCIES BETWEEN THE AS-BUILT INFORMATION AND APPROVED PLANS HAVE BEEN NOTED AND ARE CONSIDERED ACCEPTABLE TO THE CONSULTANT.

SIGNATURE — DATE — SEAL

DISTURBED AREA QUANTITIES

THE TOTAL AREA TO BE DISTURBED SHOWN ON THESE PLANS HAS BEEN DETERMINED TO BE APPROXIMATELY 3.71 ACRES AND THE TOTAL AMOUNT OF EXCAVATION AND FILL AS SHOWN ON THESE PLANS HAS BEEN COMPUTED TO BE APPROXIMATELY 2,500 CUBIC YARDS OF EXCAVATION AND 10,500 CUBIC YARDS OF FILL.

NOTES:
1. THE QUANTITIES SHOWN ARE APPROXIMATE AND SHOULD NOT BE USED BY THE CONTRACTOR FOR BIDDING PURPOSES.
2. ALL FILL MUST COME FROM A SITE WITH AN APPROVED AND UPDATED EROSION AND SEDIMENT CONTROL PLAN, AS WELL AS AN UPDATED N.P.D.E.S. PERMIT, WHERE APPLICABLE.
3. ALL SPOIL MUST GO TO A SITE WITH AN APPROVED AND UPDATED EROSION AND SEDIMENT CONTROL PLAN, AS WELL AS AN UPDATED N.P.D.E.S. PERMIT, WHERE APPLICABLE.

ENGINEER/ARCHITECT DESIGN CERTIFICATION

I HEREBY CERTIFY THIS PLAN FOR SOIL EROSION AND SEDIMENT CONTROL HAS BEEN DESIGNED IN ACCORDANCE WITH LOCAL ORDINANCES, COMAR 26.17.01.07, MARYLAND STANDARDS AND SPECIFICATIONS FOR SOIL EROSION AND SEDIMENT CONTROL.

12-04-2023 — 34688
DATE — REG. NO. — SIGNATURE

UTILITY NOTIFICATION

THE SOIL CONSERVATION DISTRICT MAKES NO REPRESENTATION AS TO THE EXISTENCE OR NONEXISTENCE OF ANY UTILITIES AT THE CONSTRUCTION SITE. SHOWN ON THESE CONSTRUCTION DRAWINGS ARE THOSE UTILITIES WHICH HAVE BEEN IDENTIFIED. IT IS THE RESPONSIBILITY OF THE LANDOWNERS OR OPERATORS AND CONTRACTORS TO ASSURE THEMSELVES THAT NO HAZARD EXISTS OR DAMAGE WILL OCCUR TO UTILITIES. THE LAW REQUIRES PRIOR TO EXCAVATION THAT MISS UTILITY BE CONTACTED AT: PHONE NO. **1-800-257-7777**

STANDARD NOTES:

WASHINGTON COUNTY STANDARD GENERAL NOTES FOR SITE PLANS

1. IN CONFORMANCE WITH THE STORMWATER MANAGEMENT ORDINANCE OF WASHINGTON COUNTY, A PERFORMANCE SECURITY AND EXECUTED MAINTENANCE AGREEMENT SHALL BE REQUIRED FROM THE DEVELOPER PRIOR TO ISSUANCE OF ANY BUILDING OR GRADING PERMIT FOR CONSTRUCTION PER THESE PLANS.
2. THE STORMWATER SYSTEM AND PUBLIC ROAD SYSTEM SHOWN ON THIS PLAN IS AN APPROXIMATION OF ITS ULTIMATE SIZE AND SHAPE. IT IS UNDERSTOOD THAT THIS SYSTEM HAS NOT BEEN DESIGNED AND ITS SIZE AND SHAPE MAY CHANGE ALTERING THE NUMBER OF UNITS ALLOCATED FOR THIS DEVELOPMENT.
3. THE DEVELOPER AGREEMENT FOR ROADS AND/OR STORMWATER MANAGEMENT SHALL BE EXECUTED BEFORE THE GRADING PERMIT CAN BE ISSUED FOR THIS DEVELOPMENT. THE COST ESTIMATE FOR ROADS, DRAINAGE AND STORMWATER MANAGEMENT SHALL BE SUBMITTED TO THE WASHINGTON COUNTY DEPARTMENT OF PUBLIC WORKS - ENGINEERING AND CONSTRUCTION PRIOR TO GRADING PERMIT APPLICATION.
4. PLEASE BE ADVISED THAT ANY PROJECT WHICH CREATES A DISTURBANCE OF ONE (1) ACRE OR MORE WILL REQUIRE A "NOTICE OF INTENT TO COMPLY WITH THE GENERAL PERMIT FOR STORM WATER DISCHARGES ASSOCIATED WITH CONSTRUCTION ACTIVITY" (N.O.I.). THE NOI IS REQUIRED UNDER THE CLEAN WATER ACT AS STATED IN 40 CFR 122.26 AND CODE OF MARYLAND REGULATIONS COMAR 26.08.04.09A AND IS REGULATED BY THE MARYLAND DEPARTMENT OF ENVIRONMENT (M.D.E.). THE N.O.I. IS TO BE SUBMITTED WITH THE APPROPRIATE FEES DIRECTLY TO M.D.E. PRIOR TO COMMENCEMENT OF CONSTRUCTION ACTIVITY. NO LAND DISTURBING ACTIVITY THAT REQUIRES A GRADING PERMIT FROM WASHINGTON COUNTY CAN PROCEED UNTIL THE GENERAL PERMIT FOR STORM WATER DISCHARGES ASSOCIATED WITH CONSTRUCTION ACTIVITY (MDR10) HAS BEEN ISSUED BY M.D.E.
5. THIS PROJECT WILL REQUIRE A THIRD PARTY QUALIFIED PROFESSIONAL TO BE PRESENT AT THE PRECONSTRUCTION MEETING SCHEDULED WITH WASHINGTON COUNTY DEPARTMENT OF PUBLIC WORKS AND THE WASHINGTON COUNTY SOIL CONSERVATION DISTRICT. CONSTRUCTION INSPECTION WILL BE REQUIRED FOR THIS PROJECT PER THE "ROADWAY AND STORMWATER MANAGEMENT CONSTRUCTION VERIFICATION PROCEDURES" DATED OCTOBER 17, 2008.
6. A COMPLETE SET OF APPROVED PLANS AND A COPY OF THE GRADING PERMIT MUST BE ON SITE AND AVAILABLE FOR USE BY THE INSPECTOR, OR OTHER REPRESENTATIVE OF WASHINGTON COUNTY DIVISION OF PUBLIC WORKS.

FIRE DEPARTMENT NOTICE

- CONSTRUCTION OCCURRING ON THIS SITE SHALL COMPLY WITH N.F.P.A. 241 STANDARD FOR SAFEGUARDING CONSTRUCTION, ALTERATION AND DEMOLITION OPERATIONS, AND CHAPTER 16 OF N.F.P.A. 1, UNIFORMED FIRE CODE.
- NO OPEN AIR BURNING IS PERMITTED
- A PERMIT IS REQUIRED FROM THE HAGERSTOWN FIRE MARSHALL'S OFFICE, 25 WEST CHURCH STREET, HAGERSTOWN, BEFORE PERFORMING BLASTING OPERATIONS.
- FIRE DEPARTMENT ACCESS SHALL BE MAINTAINED TO ALL BUILDINGS.

SP-23-033

TRIAD ENGINEERING, INC.
1075-D SHERMAN AVENUE
HAGERSTOWN, MD 21740
PH: 301.797.6400 FAX: 301.797.2424
OFFICE LOCATIONS
MARYLAND ◇ PENNSYLVANIA ◇ VIRGINIA ◇ WEST VIRGINIA

REV. #	DATE	DESCRIPTION	BY
2	11-21-2023	PER WCSCD REVIEW COMMENTS	
1	11-21-2023	PER WASH CO. ENGINEERING REVIEW COMMENTS	

CADD FILE: 03-18-0308-PH2-C-1-0	CHECKED BY: BJS	SCALE: AS SHOWN	
DRAWN BY: STAFF		DATE: 7-31-2023	

I HEREBY CERTIFY THAT THESE DOCUMENTS WERE PREPARED OR APPROVED BY ME, AND THAT I AM A DULY LICENSED PROFESSIONAL ENGINEER UNDER THE LAWS OF THE STATE OF MARYLAND, LICENSE NO. 34688 EXPIRATION DATE: 7-09-25

12-04-2023

SITE PLAN
NORTH END STORAGE II - PHASE 2
SITUATED ON SOUTH SIDE LONGMEADOW ROAD, 0.25 MILES WEST OF ITS INTERSECTION WITH MARYLAND ROUTE 60, HAGERSTOWN, MARYLAND

COVER SHEET

ZONING: BL | WATERSHED CODE: 02140502 ANTIETAM CREEK | ELEC. DIST.: 18
TAX MAP: 0025 | GRID: 0020 | PARCEL: 0628

TRIAD ENGINEERING, INC.
www.triadeng.com

SHEET NUMBER:
C.1.0
JOB NO.: 03-22-0792

LEGEND:

EXISTING:	PROPOSED:	
		CENTERLINE
OHE	OHE	OVERHEAD ELECTRIC LINE
EX UGE	UGE	UNDERGROUND ELECTRIC LINE
X X X X	X X X X	FENCE LINE
EX FO	FO FO	FIBER OPTIC LINE
		GUARD RAIL
UGG	GAS	UNDERGROUND GAS LINE
	SS	SANITARY SEWER
EX TEL	TEL	TELECOMMUNICATIONS LINE
	OHW	OVERHEAD WIRE
		WATER LINE
		CABLE TV LINE MARKER
		CABLE TV PEDESTAL
		TYPICAL CATCH BASINS
		DRAINAGE CLEANOUT
		DOWNSPOUT
		STORM DRAIN END SECTION
		TYPICAL INLETS
		STORM DRAIN MANHOLE
		ELECTRIC BOX
		ELECTRICAL MANHOLE
		ELECTRIC LINE MARKER
		ELECTRIC METER
		ELECTRIC TRANSFORMER
		SANITARY SEWER FORCE MAIN BLOW OFF
		SANITARY SEWER FORCE MAIN RELEASE
		SANITARY SEWER CLEANOUT
		SANITARY SEWER MANHOLE
		SEPTIC TANK
		FIBER OPTIC BOX
		FIBER OPTIC MANHOLE
		FIBER OPTIC LINE MARKER
		GAS MANHOLE
		GAS LINE MARKER
		GAS METER
		GAS REGULATOR
		GAS VALVE
		GAS VENT
		GAS WELL
		GAS WELL (ABANDONED)
		TELECOMMUNICATIONS MANHOLE
		TELECOMMUNICATIONS LINE MARKER
		TELECOMMUNICATIONS PEDESTAL
		UTILITY GUY POLE
		UTILITY GUY WIRE
		UTILITY POLE

EXISTING:	PROPOSED:	
		WATER LINE BLOW OFF
		WATER FOUNTAIN
		HOSE BIB
		HYDRANT
		WATER MANHOLE
		WATER LINE MARKER
		WATER METER
		WATER LINE PLUG
		WATER LINE REDUCER
		WATER LINE AIR RELEASE VALVE
		FIRE CONNECTION ("SIAMESE" /STORZ)
		SPRINKLER CONTROL
		SPRINKLER HEAD
		WATER VALVE
		WELL
		GEOTHERMAL WELL
		BBQ GRILL
		BOLLARD
		FLAGPOLE
		FUEL PUMP
		HANDICAP SYMBOL
		HVAC UNIT
		LIGHT POST
		SINGLE FIXTURE OVERHEAD LIGHT POLE
		DOUBLE FIXTURE OVERHEAD LIGHT POLE
		PARKING
		PERCOLATION TEST
		RAILROAD BOX
		RAILROAD SIGNAL
		RAILROAD SWITCH
		SATELITE DISH
		SEEP
		CONIFEROUS SHRUB
		DECIDUOUS SHRUB
		CONIFEROUS TREE
		DECIDUOUS TREE
		SINGLE POLE SIGN
		DOUBLE POLE SIGN
		TOE OF SLOPE
		TRAFFIC BOX
		TRAFFIC SIGNAL
		MAILBOX

PROJECT NOTES:

1. A GEOTECHNICAL EXPLORATION REPORT HAS BEEN PERFORMED BY TRIAD ENGINEERING, INC. FOR THE PROJECT, DATED 9-01-2023.
2. EXISTING UTILITY INFORMATION SHOWN HEREON IS FROM NUMEROUS SOURCES INCLUDING, BUT NOT LIMITED TO PROPERTY OWNER, UTILITY OWNER, PAST SITE PLANS AND DRAWINGS AND LOCATION OF SURFACE FEATURES. EXACT LOCATIONS SHALL BE DETERMINED IN THE FIELD BEFORE BEGINNING CONSTRUCTION. THE CONTRACTOR SHALL NOTIFY MISS UTILITY AND ANY OTHER UTILITY AND SUBSURFACE INVESTIGATIVE SERVICES AT (1-800-257-7777) A MINIMUM OF 48 HOURS BEFORE BEGINNING ANY WORK SHOWN ON THESE DRAWINGS.ANY DAMAGE TO UTILITIES BY THE CONTRACTOR SHALL BE REPAIRED BY THE CONTRACTOR AT HIS EXPENSE AND TO THE SATISFACTION OF THE UTILITY OWNER. HAND PIT EXCAVATION SHALL BE PROVIDED AS NEEDED BY CONTRACTOR TO LOCATE EXISTING UNDERGROUND UTILITIES.
3. THE CONTRACTOR SHALL NOTIFY THE APPLICABLE MUNICIPAL, COUNTY AND/OR STATE AUTHORITIES AT LEAST 48 HOURS BEFORE BEGINNING ANY WORK WITHIN PUBLIC RIGHT (S) OF WAY.
4. THE CONTRACTOR SHALL VERIFY ALL SURFACE AND SUBSURFACE CONDITIONS (LOCATIONS AND ELEVATIONS) PRIOR TO BIDDING AND START OF CONSTRUCTION. ANY DISCREPANCIES BETWEEN THE DRAWINGS AND ACTUAL FIELD CONDITIONS SHALL BE REPORTED TO THE OWNER AND/OR ENGINEER BEFORE PROCEEDING IF THEY AFFECT THE DESIGN FEASIBILITY OF THIS PROJECT. ANY DAMAGE TO FACILITIES, STRUCTURES, PAVEMENT OR OTHER MAN-MADE ITEMS ON OR ADJACENT TO THE SITE OR NOT SPECIFICALLY INDICATED FOR DEMOLITION SHALL BE REPAIRED OR REPLACED AT CONTRACTOR'S EXPENSE AND TO THE SATISFACTION OF THE OWNER.
5. THE CONTRACTOR SHALL BE RESPONSIBLE FOR OBTAINING ALL NECESSARY PERMITS AND FOR COMPLYING WITH ALL APPLICABLE LEGAL AND REGULATORY REQUIREMENTS. CONTRACTOR SHALL OBTAIN ANY BONDS REQUIRED BY COUNTY/ STATE FOR WORK WITHIN COUNTY/ STATE RIGHT-OF-WAYS.
6. TEMPORARY EROSION CONTROL MEASURES WILL BE USED TO CORRECT CONDITIONS THAT DEVELOP DURING CONSTRUCTION THAT ARE UNFORESEEN DURING THE DESIGN STAGE OR THAT ARE NEEDED TO TEMPORARILY CONTROL EROSION THAT DEVELOPS DURING NORMAL CONSTRUCTION PRACTICES.
7. TRIAD ENGINEERING, INC. WILL NOT BE RESPONSIBLE FOR ANYTHING TO DO WITH CONSTRUCTION UNLESS CONTRACTED BY THE OWNER OR CONTRACTOR TO PERFORM A SPECIFIC SERVICE.
8. JOB SITE SAFETY SHALL BE THE SOLE RESPONSIBILITY OF THE CONTRACTOR.
9. NO TITLE REPORT HAS BEEN PROVIDED TO TRIAD ENGINEERING FOR THE PROJECT.
10. IT SHALL BE THE SOLE RESPONSIBILITY OF THE OWNER AND/OR DEVELOPER TO OBTAIN ALL NECESSARY EASEMENTS AND/OR RIGHT OF WAYS NECESSARY IN ORDER TO COMPLETE THE PROJECT SHOWN ON THESE PLANS. TRIAD ENGINEERING, INC. WILL ASSUME NO RESPONSIBILITY OR LIABILITY ASSOCIATED WITH THE ACQUIRING OF OFFSITE EASEMENTS AND RIGHT OF WAYS.
11. IF A STORM WATER MANAGEMENT STRUCTURE IS PRESENT ON THIS SITE, CONSTRUCTION INSPECTION AND ASBUILT CERTIFICATION OF THIS STRUCTURE OR STRUCTURES BY A REGISTERED PROFESSIONAL ENGINEER WILL BE REQUIRED. IT SHALL BE THE RESPONSIBILITY OF THE CONTRACTOR TO NOTIFY THE INSPECTING ENGINEER PRIOR TO THE START OF CONSTRUCTION IN ORDER TO DETERMINE WHEN INSPECTIONS WILL BE REQUIRED. IT SHALL ALSO BE THE RESPONSIBILITY OF THE CONTRACTOR TO NOTIFY THE ENGINEER WHEN THE STRUCTURE HAS BEEN COMPLETED AND STABILIZED IN ORDER THAT THE ASBUILT SURVEY MAY BE PERFORMED. STABILIZATION IS DEFINED AS HAVING A STAND OF GRASS OR OTHER SUITABLE VEGETATIVE COVER AS SPECIFIED ON THESE PLANS.
12. FINAL APPROVAL OF A STORMWATER MANAGEMENT STRUCTURE MUST BE GRANTED BY THE APPROPRIATE GOVERNMENT AGENCY/AGENCIES. APPROVAL BY THE INSPECTING ENGINEER DOES NOT GUARANTEE THAT ADDITIONAL WORK WILL NOT HAVE TO BE PERFORMED ON A STORMWATER MANAGEMENT STRUCTURE IN ORDER FOR IT TO COMPLY WITH THE STANDARDS OF THE GOVERNMENT AGENCY OR AGENCIES THAT ARE RESPONSIBLE FOR APPROVING THE STRUCTURE. TRIAD ENGINEERING, INC., ITS PERSONNEL AND ITS SUBCONTRACTORS WILL NOT BE LIABLE FOR ANY ADDITIONAL WORK ASSOCIATED WITH A STORMWATER MANAGEMENT STRUCTURE IN ORDER TO HAVE IT CONFORM TO NECESSARY STANDARDS.
13. ALL SPECIFICATIONS SHOWN HEREIN SHALL BE USED AND LOCAL, STATE AND FEDERAL SPECIFICATIONS SHALL BE MINIMUM STANDARD.
14. IF SITE THIRD PARTY CONSTRUCTION INSPECTIONS ARE REQUIRED BY WASHINGTON COUNTY , MARYLAND, THEN THE INSPECTION/CERTIFYING ENGINEER SHOULD BE CONTACTED ONE (1) WEEK IN ADVANCE TO START OF WORK.

GENERAL NOTES:

1. TAX MAP 0025, GRID 0020, PARCEL 0628
2. ELECTION DISTRICT: 18
3. DEED REFERENCE: BEING PART OF THE LANDS CONVEYED UNTO THE JOHN R. OLIVER COMPANY, INC. FROM DOUGLAS G. MOUL, TRUSTEE, OF THE MICHAEL G. CALLAS CHARITABLE TRUST , BY DEED DATED NOVERMBER 13, 2018 , AND RECORDED AMONG THE LAND RECORDS OF WASHINGTON COUNTY, MARYLAND IN BOOK 5870, PAGE 336.
4. SITE AREA PER DEED = 7.47 AC.±
5. THE PROPERTY LINES SHOWN HEREON ARE FROM DEEDS AND/OR PLATS OF RECORD. NO BOUNDARY SURVEY HAS BEEN PERFORMED BY TRIAD ENGINEERING, INC.
6. TOPOGRAPHIC INFORMATION WAS PRIMARILY SOURCED FROM THE WASHINGTON COUNTY TOPOGRAPHIC GIS MAPPING AND WAS SUPPLEMENTED BY A TOPOGRAPHIC SURVEY, ALONG LONGMEADOW ROAD, PERFORMED BY TRIAD ENGINEERING, INC. DATE OF SURVEY IS 02-10-2023
7. SITE IS ZONED "BL" - BUSINESS LOCAL DISTRICT
8. EXISTING USAGE IS SELF- STORAGE UNITS. PROPOSED USAGE IS A SELF- STORAGE UNITS, WHICH IS A PRINCIPAL PERMITTED USAGE IN THE BUSINESS LOCAL DISTRICT .
9. THE PURPOSE OF THIS SITE PLAN IS FOR A SELF-STORAGE UNITS.
10. MINIMUM LOT REQUIREMENTS PER ARTICLE 6.5 OF THE WASHINGTON COUNTY ZONING ORDINANCE:

LOT AREA	LOT WIDTH	FRONT YARD	SIDE YARD	REAR YARD	MAX. BLDG HEIGHT
NONE	NONE	25 ft.	10 ft.	10 ft.*	25 ft.

*WHERE ADJOINING ANY RR,RT,RS,RU, OR RM DISTRICT, NOT LESS THAN 25 FEET.

11. THERE IS NO PROPOSED WATER OR SEWER FOR THE SITE.
12. HORIZONTAL DATUM IS N.A.D. 83/(91) AND VERTICAL DATUM IS N.A.V.D.88, BOTH ESTABLISHED BY G.P.S. OBSERVATIONS MADE NEAR THIS SITE, AND ARE BASED ON WASHINGTON COUNTY CONTROL MONUMENTS 10-03-96 AND 10-04-96.
13. HOURS OF OPERATION: 24 HR. A DAY, 7 DAYS A WEEK
14. NUMBER OF EMPLOYEES: 0 -- MINI WAREHOUSE IS SELF SUSTAINING
15. PARKING REQUIREMENTS PER SECTION 22.12(b) OF THE WASHINGTON COUNTY ZONING ORDINANCE:
    15.1. 1 SPACE REQUIRED PER 50 UNITS: 74 EXISTING UNITS - 2 SPACES
    95 PROPOSED UNITS -2 SPACES
    15.2. 4 GUEST SPACES REQUIRED
    1 HANDICAP SPACE REQUIRED
16. PARKING PROVIDED:

REGULAR SPACES	8
HANDICAP SPACES	1
TOTAL PARKING	9

17. ON-SITE IMPERVIOUS AREA:

PRE-DEVELOPMENT

BUILDINGS	31,207.5 SQ. FT.
PARKING, DRIVE AREAS, ETC.	26,321.5 SQ. FT.
TOTAL	57,529.0 SQ. FT.

POST-DEVELOPMENT TOTAL

BUILDINGS	71,107.5 SQ. FT.
PARKING, DRIVE AREAS, ETC.	89,568.5 SQ. FT.
TOTAL	160,676.0 SQ. FT.
% IMPERVIOUS	= 49.48%

WHICH IS LESS THAN THE MAXIMUM - % IMPERVIOUS PER SECTION 11.6(a) OF THE WASHINGTON COUNTY ZONING ORDINANCE

18. PER SECTION 4.12 OF ZONING ORDINANCE
    18.a. IF ANY AIR POLLUTION OCCURS IT WILL MEET THE MARYLAND AIR POLLUTION CONTROL STANDARDS.
    18.b. THERE WILL BE NO HEAT OR GLARE ADVERSELY AFFECTING ADJOINING PROPERTIES.
    18.c. THERE WILL BE NO VIBRATIONS AFFECTING ADJOINING PROPERTIES.
    18.d. THE EMISSION OF RADIOACTIVITY OF ELECTRICAL DISTURBANCES WILL COMPLY WITH STATE AND FEDERAL CODES.
    18.e. NO OUTSIDE SOURCES OF POWER WILL BE USED ON-SITE OTHER THAN PUBLIC UTILITY.
    18.f. NO SPECIAL SEWER WASTE WILL BE GENERATED ON SITE.
    18.g. THERE WILL BE NO OUTSIDE STORAGE OF MATERIALS.
19. PROPOSED SIGNAGE: ALL SIGNAGE SHALL COMPLY WITH SECTION 22.24 OF THE WASHINGTON COUNTY ZONING ORDINANCE. NO PROPOSED SIGNS WITH THIS PLAN.
20. TRASH AND RECYCLABLES: NO TRASH TO BE GENERATED BY THE INTENDED USE NEEDING DISPOSED OF ON-SITE OR OFF-SITE. OWNER TO INCORPORATE TRASH DISPOSAL BY TENANT IN RENTAL AGREEMENT.
21. PROPOSED SITE LIGHTING: ALL PROPOSED LIGHTING WILL BE BUILDING MOUNTED AND SHALL BE INSTALLED AS DOWN SHIELDED IN SUCH A MANNER SO AS TO ELIMINATE GLARE ONTO ADJOINING PROPERTIES AND ROADWAYS.
22. PROPOSED BUILDING AREA = 0.92 AC.
23. PROPOSED EAVE HEIGHT = 14 FT.
24. THERE ARE TWO INTERMITTENT STREAM SYMBOLS ASSOCIATED WITHIN THE PROJECT LIMITS AS SHOWN ON SHEET NUMBER 26 OF 56 OF THE SOIL SURVEY OF WASHINGTON COUNTY, MARYLAND; HOWEVER THE INTERMITTENT STREAM SYMBOLS DO NOT MEET THE STREAM BUFFER CRITERIA. SEE STREAM BUFFER CRITERIA NOTES ON SHEET C.2.0.
25. THERE ARE NO AREAS OF STEEP SLOPES (AS DEFINED BY ARTICLE 28.631 OF THE WASHINGTON COUNTY ZONING ORDINANCE) WITHIN THE SITE.
26. THIS SITE IS NOT WITHIN THE LIMITS OF THE APPALACHIAN TRAIL CORRIDOR OF THE WATERSHEDS OF THE EDGEMEONT-SMITHSBURG RESERVOIR OR THE UPPER BEAVER CREEK DRAINAGE BASIN.
27. THERE ARE NO AREAS OF KNOWN HABITATS OF THREATENED OF ENDANGERED SPECIES IDENTIFIED BY THE U.S. FISH AND WILDLIFE SERVICE AS PER 50 CFR 17.
28. THE PROJECT LIMITS ARE NOT WITHIN THE 100 YEAR FLOOD PLAIN AS SHOWN ON FEMA FIRM COMMUNITY PANEL NO. 24043C0141 D, WITH AN EFFECTIVE DATE OF AUGUST 15, 2017.
29. THERE ARE NO WETLANDS WITHIN THE PROJECT LIMITS PER THE U.S. FISH AND WILDLIFE SERVICE NATIONAL WETLANDS INVENTORY.
30. FOREST CONSERVATION OBLIGATIONS WILL BE MET BY OFFSITE FOREST CONSERVATION EASEMENT. ADDITIONAL DETAILS ABOUT THE FOREST CONSERVATION PLAN CAN BE FOUND ON THE PLAT ENTITLED "COMBINED PRELIMINARY/ FINAL PLAT OF SUBDIVISION, COMBINED PRELIMINARY / FINAL FOREST CONSERVATION PLAN AND FOREST CONSERVATION EASEMENT PLAT / REPLAT, JOHN R. OLIVER COMPANY, LIBER 5870, FOLIO 336, THE GOOD SHEPHERD MINISTRIES, INC. LIBER 1890, FOLIO 588, RECORDED IN WASHINGTON COUNTY, MD. PLAT FOLIO 11,692 - 11,695.
31. NO OFFICE SPACE WILL BE REQUIRED ON SITE FOR THE PROPOSED USE. ALL BUSINESS CONDUCTED THROUGH JOHN R. OLIVER COMPANY, INC. LOCATED AT 19733 LEITERSBURG PIKE, HAGERSTOWN, MARYLAND 21742.
32. EACH ADDRESS IS BASED ON THE ENTRANCE LOCATION AS SHOWN ON THE PLAT. IF DRIVEWAYS ARE CONSTRUCTED AT A DIFFERENT LOCATION, THE ADDRESS FOR THAT LOT IS VOID, AND THE OWNER/DEVELOPER OF THE LOT MUST REAPPLY TO THE OFFICE OF ADDRESS REVIEW FOR A NEW ADDRESS ASSIGNMENT.

OWNER/DEVELOPER:
JOHN R. OLIVER CO., INC.
C/O TAYLOR OLIVER
19733 LEITERSBURG PIKE
HAGERSTOWN, MD 21742
PHONE: 301-797-0000

SP-23-033

TRIAD ENGINEERING, INC.
1075-D SHERMAN AVENUE
HAGERSTOWN, MD 21740
PH: 301.797.6400 FAX: 301.797.2424
OFFICE LOCATIONS
MARYLAND ◇ PENNSYLVANIA ◇ VIRGINIA ◇ WEST VIRGINIA

REV. #	DATE	DESCRIPTION	BY
1	11-21-2023	PER WASH CO. FOREST CONSERV. PLAN REVIEW COMMENTS	
1	11-21-2023	PER WASH CO. ENGINEERING REVIEW COMMENTS	

CADD FILE: 03-18-0308-PH2-C-1-1
DRAWN BY: STAFF
CHECKED BY: BJS
DATE: 7-31-2023
SCALE: AS SHOWN

I HEREBY CERTIFY THAT THESE DOCUMENTS WERE PREPARED OR APPROVED BY ME, AND THAT I AM A DULY LICENSED PROFESSIONAL ENGINEER UNDER THE LAWS OF THE STATE OF MARYLAND, LICENSE NO. 34688 EXPIRATION DATE: 7-09-25

12-04-2023

SITE PLAN
NORTH END STORAGE II - PHASE 2
SITUATED ON SOUTH SIDE LONGMEADOW ROAD, 0.25 MILES WEST OF ITS INTERSCTION WITH MARYLAND ROUTE 60, HAGERSTOWN, MARYLAND

LEGEND AND GENERAL SITE NOTES

ZONING: BL | WATERSHED CODE: 02140502 ANTIETAM CREEK | PARCEL: 0628 | ELEC. DIST.: 18
TAX MAP: 0025 | GRID: 0020

TRIAD ENGINEERING, INC.
www.triadeng.com

SHEET NUMBER:
C.1.1
JOB NO.: 03-22-0792

STREAM BUFFER CRITERIA NOTES

- NO USGS BLUELINE STREAM STREAM SYMBOLS ARE PRESENT WITHIN THE PROJECT AREA PER USGS QUADRANGLE MAP "HAGERSTOWN, MD.-PA" . HENCE NO STREAM BUFFERS ARE REQUIRED.
- THE THREE DOT INTERMITTENT STREAM SYMBOLS ARE PRESENT WITHIN THE PROJECT AREA PER THE SOIL SURVEY WITH A DRAINAGE AREA OF APPROXIMATELY 18 AND 56 ACRES RESPECTIVELY. THE HAGERSTOWN SOIL GROUP IS PRESENT WITH NO WELL DEFINED CHANNEL AND NO EVIDENCE OF PERSISTENT OR CONCENTRATED FLOW. THE INTERMITTENT STREAM DOES NOT DRAIN A SPRING HEAD AND NO KNOWN SINKHOLES ARE PRESENT. THE INTERMITTENT STREAM SYMBOL HAS NO FLOW PATH OR CONNECTION TO DOWNSTREAM WETLAND. NO EROSION AT THE EXISTING CULVERT AT LONGMEADOW ROAD AND NO EVIDENCE OF PONDING ON SITE. THEREFORE, BASED ON THE SENSITIVE AREA CRITERIA AND ARTICLE IV, SECTION 409 OF THE WASHINGTON COUNTY SUBDIVISION ORDINANCE, A STREAM BUFFER IS NOT REQUIRED.

SENSITIVE AREA NOTES

1. THERE ARE TWO INTERMITTENT STREAM SYMBOLS ASSOCIATED WITHIN THE PROJECT LIMITS AS SHOWN ON SHEET NUMBER 26 OF 56 OF THE SOIL SURVEY OF WASHINGTON COUNTY, MARYLAND; HOWEVER THE INTERMITTENT STREAM SYMBOLS DO NOT MEET THE STREAM BUFFER CRITERIA. SEE STREAM BUFFER CRITERIA NOTES THIS SHEET.
2. THERE ARE NO AREAS OF STEEP SLOPES (AS DEFINED BY ARTICLE 28.631 OF THE WASHINGTON COUNTY ZONING ORDINANCE) WITHIN THE SITE.
3. THIS SITE IS NOT WITHIN THE LIMITS OF THE APPALACHIAN TRAIL CORRIDOR OR THE WATERSHEDS OF THE EDGEMONT-SMITHSBURG RESERVOIR OR THE UPPER BEAVER CREEK DRAINAGE BASIN.
4. THERE ARE NO AREAS OF KNOWN HABITATS OF THREATENED OR ENDANGERED SPECIES IDENTIFIED BY THE U.S. FISH AND WILDLIFE SERVICE AS PER 50 CFR 17.
5. THE PROJECT LIMITS ARE NOT WITHIN THE 100 YEAR FLOOD PLAIN AS SHOWN ON FEMA FIRM COMMUNITY PANEL NO. 24043C0141 D, WITH AN EFFECTIVE DATE OFAUGUST 15,2017.
6. THERE ARE NO WETLANDS WITHIN THE PROJECT LIMITS PER THE U.S. FISH AND WILDLIFE SERVICE NATIONAL WETLANDS INVENTORY.
7. CONSISTENT WITH A LANDSCAPE OF KARST TOPOGRAPHY, THERE ARE ROCK OUTCROPS AND THE POTENTIAL EXISTS FOR SINKHOLE HOWEVER NO KNOWN SINKHOLES OR CLOSED DEPRESSIONS ARE KNOWN TO EXIST ON SITE OR WITHIN THE PROJECT GRADING AREAS.

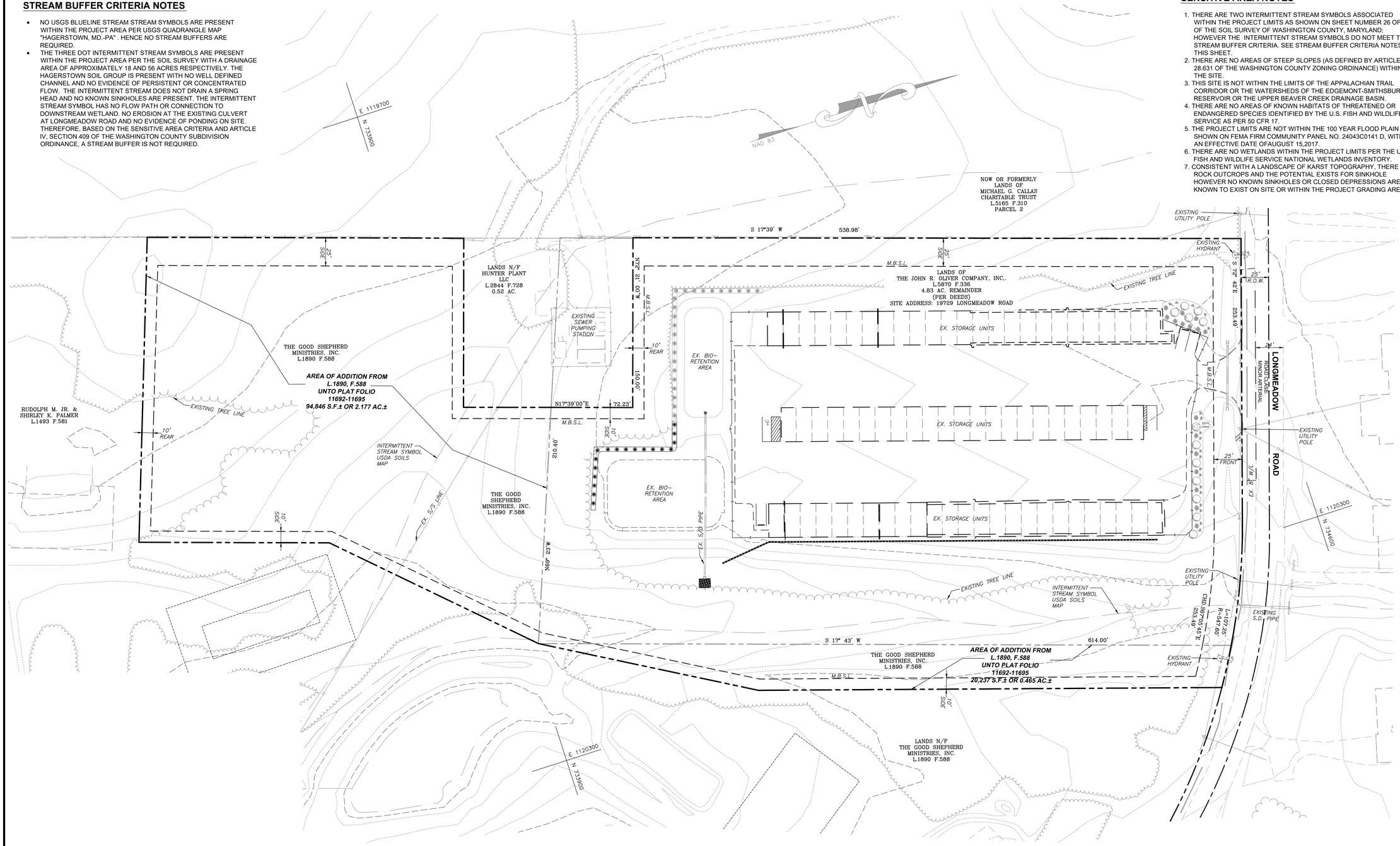

GRAPHIC SCALE

40 0 20 40 80 160

(IN FEET)
1 inch = 40 ft.

SOIL TYPE ON SITE

SYMBOL	DESCRIPTION	K FACTOR (WHOLE)	HYDROLOGIC SOILS GROUP
HcC	HAGERSTOWN-ROCK OUTCROP COMPLEX, 8 TO 15% SLOPES	0.32	B

OWNER/DEVELOPER:
JOHN R. OLIVER CO., INC.
C/O MARK OLIVER
19733 LEITERSBURG PIKE
HAGERSTOWN, MD 21742
PHONE: 301-797-0000

SP-23-033

TRIAD ENGINEERING, INC.
1075-D SHERMAN AVENUE
HAGERSTOWN, MD 21740
PH: 301.797.6400 FAX: 301.797.2424
OFFICE LOCATIONS
MARYLAND ◇ PENNSYLVANIA ◇ VIRGINIA ◇ WEST VIRGINIA

REV. #	DATE	DESCRIPTION	BY

CADD FILE: 03-22-0792-PH2-C-2-0
DRAWN BY: STAFF
CHECKED BY: BJS
DATE: 7-31-2023
SCALE: 1"=40'

I HEREBY CERTIFY THAT THESE DOCUMENTS WERE PREPARED OR APPROVED BY ME, AND THAT I AM A DULY LICENSED PROFESSIONAL ENGINEER UNDER THE LAWS OF THE STATE OF MARYLAND, LICENSE NO. 34688 EXPIRATION DATE: 7-09-25

STATE OF MARYLAND · BILLIE JON SWARTZ · No. 34688 · PROFESSIONAL ENGINEER

12-04-2023

SITE PLAN
NORTH END STORAGE II - PHASE 2
SITUATED ON SOUTH SIDE LONGMEADOW ROAD, 0.25 MILES WEST OF ITS INTERSCTION WITH MARYLAND ROUTE 60, HAGERSTOWN, MARYLAND
EXISTING CONDITIONS

ZONING: BL | WATERSHED CODE: 02140502 ANTIETAM CREEK | ELEC. DIST.: 18
TAX MAP: 0025 | GRID: 0020 | PARCEL: 0628

TRIAD ENGINEERING, INC.
www.triadeng.com

SHEET NUMBER:
C.2.0
JOB NO.: 03-22-0792

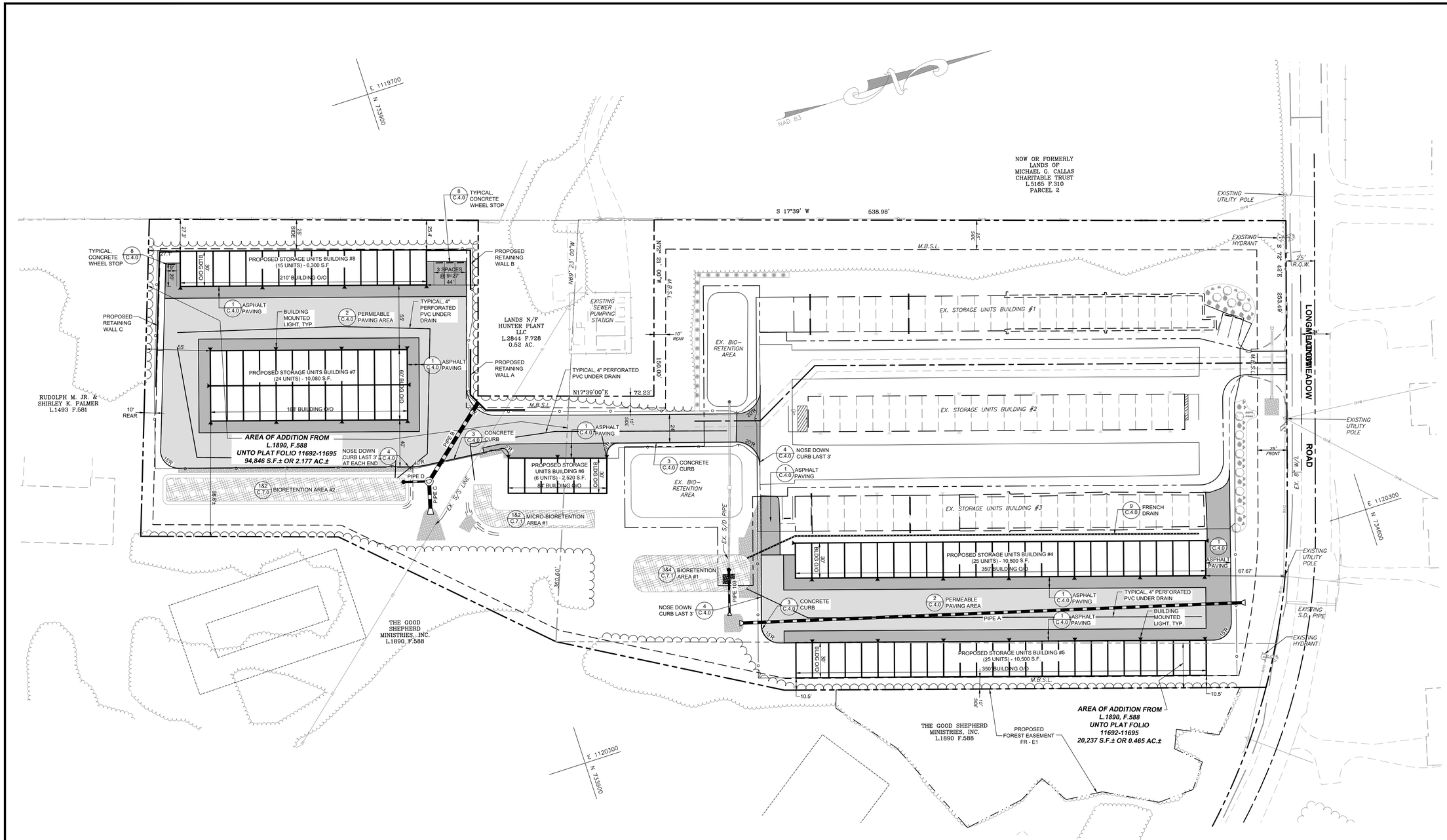

GRAPHIC SCALE

40 0 20 40 80 160

(IN FEET)
1 inch = 40 ft.

OWNER/DEVELOPER:
JOHN R. OLIVER CO., INC.
C/O TAYLOR OLIVER
19733 LEITERSBURG PIKE
HAGERSTOWN, MD 21742
PHONE: 301-797-0000

SP-23-033

TRIAD ENGINEERING, INC.
1075-D SHERMAN AVENUE
HAGERSTOWN, MD 21740
PH: 301.797.6400 FAX: 301.797.2424
OFFICE LOCATIONS
MARYLAND ◇ PENNSYLVANIA ◇ VIRGINIA ◇ WEST VIRGINIA

REV. #	DATE	DESCRIPTION	BY
2	11-21-2023	PER WASH CO. FOREST CONSERV. PLAN REVIEW COMMENTS	BDB
1	11-21-2023	PER WASH CO. ENGINEERING REVIEW COMMENTS	BDB

CADD FILE: 03-22-0792-PH2-C-3-0
DRAWN BY: STAFF
CHECKED BY: BJS
DATE: 7-31-2023
SCALE: 1"=40'

I HEREBY CERTIFY THAT THESE DOCUMENTS WERE PREPARED OR APPROVED BY ME, AND THAT I AM A DULY LICENSED PROFESSIONAL ENGINEER UNDER THE LAWS OF THE STATE OF MARYLAND, LICENSE NO. 34688 EXPIRATION DATE: 7-09-25

12-04-2023

SITE PLAN
NORTH END STORAGE II - PHASE 2
SITUATED ON SOUTH SIDE LONGMEADOW ROAD, 0.25 MILES WEST OF ITS INTERSECTION WITH MARYLAND ROUTE 60, HAGERSTOWN, MARYLAND

SITE PLAN

ZONING: BL | WATERSHED CODE: 02140502 ANTIETAM CREEK | ELEC. DIST.: 18
TAX MAP: 0025 | GRID: 0020 | PARCEL: 0628

TRIAD ENGINEERING, INC.
www.triadeng.com

SHEET NUMBER:
C.3.0
JOB NO.: 03-22-0792

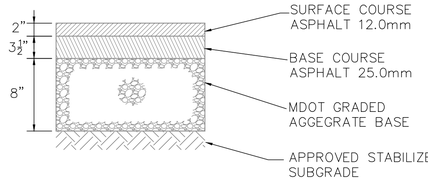

1 **PAVING SECTION**
NOT TO SCALE

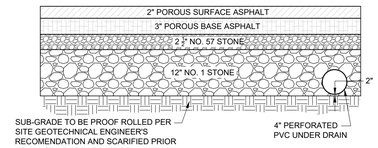

NOTES:
1. SEE PERMEABLE PAVEMENT NOTES THIS SHEET.
2. THE POROUS ASPHALT MIX SHALL BE PRE-BLENDED PG 76-22 MODIFIED WITH SBS AND 5 POUNDS OF FIBERS PER TON OF ASPHALT MIX, MINIMUM OF 5.75 PERCENT BINDER BY WEIGHT OF TOTAL MIX. MINIMUM AIR VOIDS OF 16%. DRAINDOWN TEST OF 0.3% MAXIMUM. THE SBS WILL BE SUPPLIED BY AN APPROVED PGAB SUPPLIER HOLDING A QUALITY CONTROL PLAN APPROVED BY MDOT. A BILL OF LADING WILL BE DELIVERED WITH EACH TRANSPORT OF PG 76-22 SBS. A COPY OF THE BILL OF LADING WILL BE FURNISHED TO THE QA INSPECTOR AT THE PLANT.

2 **PERMEABLE PAVING - PARKING LOT**
NOT TO SCALE

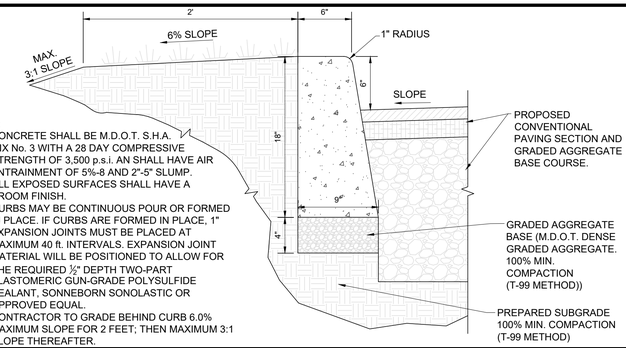

NOTES:
1. CONCRETE SHALL BE M.D.O.T. S.H.A. MIX No. 3 WITH A 28 DAY COMPRESSIVE STRENGTH OF 3,500 p.s.i. AN SHALL HAVE AIR ENTRAINMENT OF 5%-8 AND 2"-5" SLUMP.
2. ALL EXPOSED SURFACES SHALL HAVE A BROOM FINISH.
3. CURBS MAY BE CONTINUOUS POUR OR FORMED IN PLACE. IF CURBS ARE FORMED IN PLACE, 1" EXPANSION JOINTS MUST BE PLACED AT MAXIMUM 40 ft. INTERVALS. EXPANSION JOINT MATERIAL WILL BE POSITIONED TO ALLOW FOR THE REQUIRED ½" DEPTH TWO-PART ELASTOMERIC GUN-GRADE POLYSULFIDE SEALANT, SONNEBORN SONOLASTIC OR APPROVED EQUAL.
4. CONTRACTOR TO GRADE BEHIND CURB 6.0% MAXIMUM SLOPE FOR 2 FEET; THEN MAXIMUM 3:1 SLOPE THEREAFTER.

3 **6" CONCRETE CURB DETAIL**
NOT TO SCALE

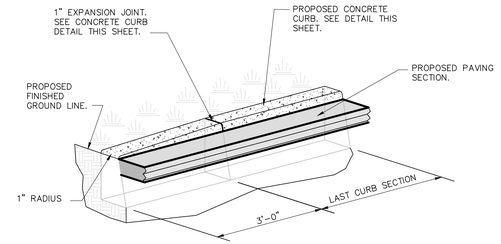

4 **CURB NOSE DOWN DETAIL**
NOT TO SCALE

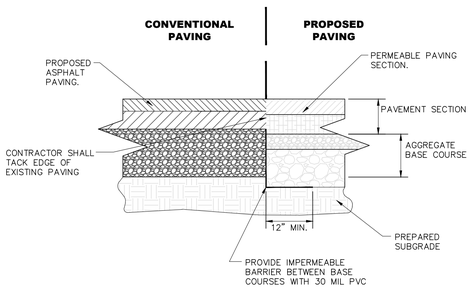

5 **PERMEABLE PAVING TRANSITION DETAIL**
NOT TO SCALE

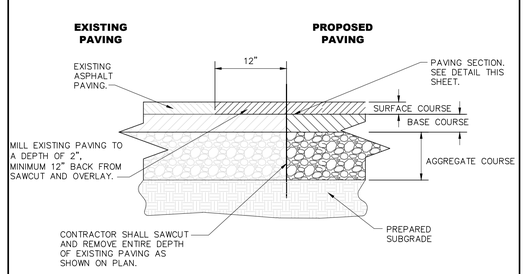

NOTE: ANY PAVEMENT WITH THE PUBLIC RIGHT-OF-WAY MUST BE EQUAL TO THE EXISTING LONGMEADOW ROAD PAVING SECTION.

6 **TRADITIONAL PAVING TRANSITION DETAIL**
NOT TO SCALE

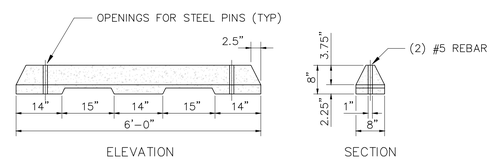

8 **CONCRETE WHEEL STOP DETAIL**
NOT TO SCALE

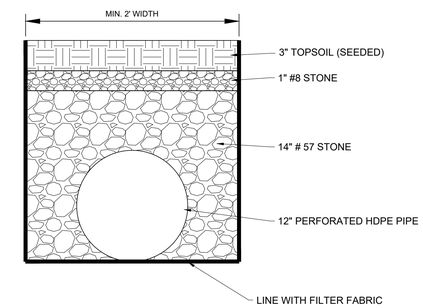

9 **GRAVEL FRENCH DRAIN DETAIL**
NOT TO SCALE

OWNER/DEVELOPER:
JOHN R. OLIVER CO., INC.
C/O TAYLOR OLIVER
19733 LEITERSBURG PIKE
HAGERSTOWN, MD 21742
PHONE: 301-797-0000

SP-23-033

TRIAD ENGINEERING, INC.
1075-D SHERMAN AVENUE
HAGERSTOWN, MD 21740
PH: 301.797.6400 FAX: 301.797.2424
OFFICE LOCATIONS
MARYLAND ◇ PENNSYLVANIA ◇ VIRGINIA ◇ WEST VIRGINIA

REV. #	DATE	DESCRIPTION	BY
			BDB
			BDB

CADD FILE: 03-22-0792-PH2-C-3-0
DRAWN BY: STAFF
CHECKED BY: BJS
DATE: 7-31-2023
SCALE: AS SHOWN

I HEREBY CERTIFY THAT THESE DOCUMENTS WERE PREPARED OR APPROVED BY ME, AND THAT I AM A DULY LICENSED PROFESSIONAL ENGINEER UNDER THE LAWS OF THE STATE OF MARYLAND, LICENSE NO. 34688 EXPIRATION DATE: 7-09-25

12-04-2023

SITE PLAN
NORTH END STORAGE II - PHASE 2
SITUATED ON SOUTH SIDE LONGMEADOW ROAD, 0.25 MILES WEST OF ITS INTERSCTION WITH MARYLAND ROUTE 60, HAGERSTOWN, MARYLAND

SITE DETAILS

ZONING: BL | WATERSHED CODE: 02140502 ANTIETAM CREEK | ELEC. DIST.: 18
TAX MAP: 0025 | GRID: 0020 | PARCEL: 0628

TRIAD ENGINEERING, INC.
www.triadeng.com

SHEET NUMBER:
C.4.0
JOB NO.: 03-22-0792

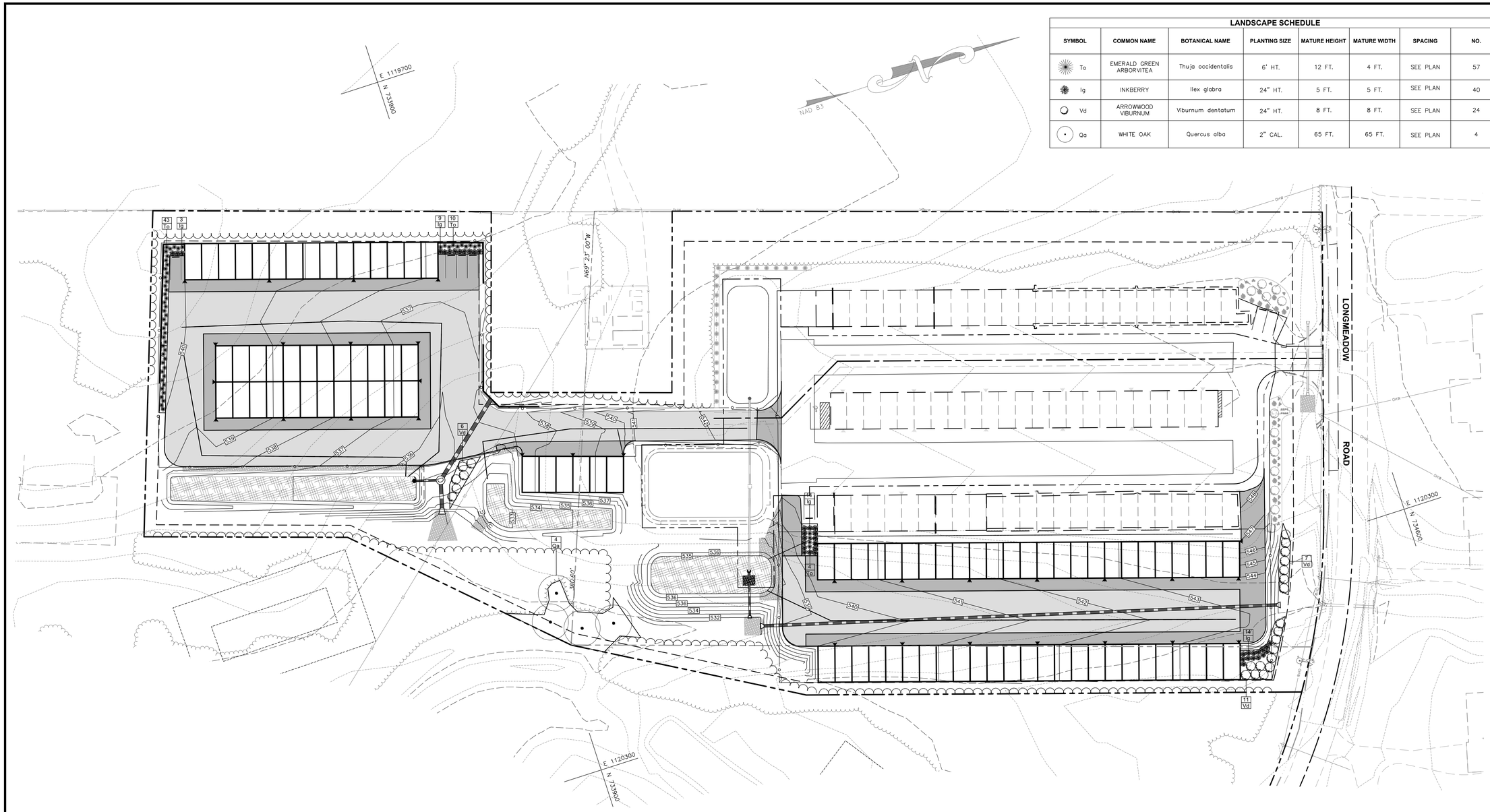

LANDSCAPE SCHEDULE

SYMBOL	COMMON NAME	BOTANICAL NAME	PLANTING SIZE	MATURE HEIGHT	MATURE WIDTH	SPACING	NO.
To	EMERALD GREEN ARBORVITEA	Thuja occidentalis	6' HT.	12 FT.	4 FT.	SEE PLAN	57
Ig	INKBERRY	Ilex glabra	24" HT.	5 FT.	5 FT.	SEE PLAN	40
Vd	ARROWWOOD VIBURNUM	Viburnum dentatum	24" HT.	8 FT.	8 FT.	SEE PLAN	24
Qa	WHITE OAK	Quercus alba	2" CAL.	65 FT.	65 FT.	SEE PLAN	4

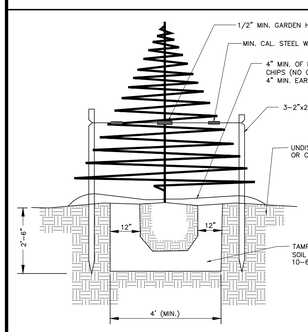

CONIFEROUS TREE DETAIL

(LESS THAN 8' HIGH)

N.T.S

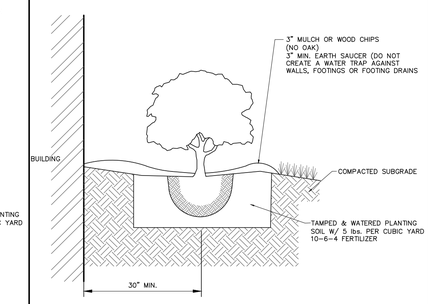

SHRUB PLANTING DETAIL

N.T.S

PLANTING SEASON:

MARCH 1 TO MAY 15 AND AUGUST 15 TO NOVEMBER 15.

1) ALL TREES SHALL BE OF NURSERY STOCK QUALITY, SYMMETRICAL GROWTH AND FREE OF INSECT PESTS AND DISEASE.
2) TREES WHICH HAVE DIED OR BECOME DISEASED OR PEST RIDDEN SHALL BE REPLACED BY THE DEVELOPER.
3) MINIMUM SIZE. THE TRUNK DIAMETER (MEASURED AT A HEIGHT OF ONE [1] FOOT ABOVE THE FINISHED GRADE LEVEL) SHALL BE A MINIMUM OF ONE AND ONE-HALF (1-1/2) inches OR GREATER.
4) TREES SHALL BE PLANTED IN CONFORMANCE WITH GOOD LANDSCAPING PRACTICES.
5) TREES SHALL BE PROPERLY PROTECTED BY RAISED CURBS OR SIMILAR DEVICES FROM DAMAGE FROM VEHICLES.
6) TREES SHALL BE PROPERLY MAINTAINED AND SHALL NOT BE REMOVED WITHOUT BEING REPLACED BY ANOTHER TREE OF THE SAME KIND OR ANOTHER TREE THAT MEETS THE REQUIREMENTS OF "C-5" ZONING.

LANDSCAPING REQUIREMENTS TABULATION

PER DIVISION XI §22.11.1(c)(1)(ii) THE REQUIRED LANDSCAPING AREA REQUIRED FOR THE SITE IS TO BE FIVE PERCENT OF THE TOTAL SITE AREA (LOD).

TOTAL AREA = 0.05 X 3.71 AC. = 0.19 AC. or 8,080 SF
PLUS AREA REMOVED FROM SP-19-001 AREA 3=0.014 AC. OR 591 SF

REQUIRED AREA	0.204 AC. or	8,671	SF
LESS 30% FOR BIO AREA PER §22.11.1(c)(3)	0.070 AC. or	3,035	SF
REQUIRED AREA REMAINING	0.134 AC. or	5,636	SF
PLANTING AREA 1	0.020 AC. or	820	SF
PLANTING AREA 2	0.008 AC. or	332	SF
PLANTING AREA 3	0.009 AC. or	412	SF
PLANTING AREA 4	0.058 AC. or	2,536	SF
PLANTING AREA 5	0.010 AC. or	438	SF
PLANTING AREA 6	0.022 AC. or	948	SF
PLANTING AREA 7	0.010 AC. or	436	SF
PLANTING AREA PROVIDED	0.136 AC. or	5,912	SF

GRAPHIC SCALE

40 0 20 40 80 160

(IN FEET)
1 inch = 40 ft.

OWNER/DEVELOPER:

JOHN R. OLIVER CO., INC.
C/O TAYLOR OLIVER
19733 LEITERSBURG PIKE
HAGERSTOWN, MD 21742
PHONE: 301-797-0000

SP-23-033

TRIAD ENGINEERING, INC.
1075-D SHERMAN AVENUE
HAGERSTOWN, MD 21740
PH: 301.797.6400 FAX: 301.797.2424
OFFICE LOCATIONS
MARYLAND ◇ PENNSYLVANIA ◇ VIRGINIA ◇ WEST VIRGINIA

REV. #	DATE	DESCRIPTION	BY
			BDB
			BDB

CADD FILE: 03-22-0792-PH2-C-5-0
DRAWN BY: STAFF
CHECKED BY: BJS
DATE: 7-31-2023
SCALE: 1"=40'

I HEREBY CERTIFY THAT THESE DOCUMENTS WERE PREPARED OR APPROVED BY ME, AND THAT I AM A DULY LICENSED PROFESSIONAL ENGINEER UNDER THE LAWS OF THE STATE OF MARYLAND, LICENSE NO. 34688 EXPIRATION DATE: 7-09-25

STATE OF MARYLAND
BILLIE JON SMITH, JR.
No. 34688
PROFESSIONAL ENGINEER

12-04-2023

SITE PLAN
NORTH END STORAGE II - PHASE 2
SITUATED ON SOUTH SIDE LONGMEADOW ROAD, 0.25 MILES WEST OF ITS INTERSECTION WITH MARYLAND ROUTE 60, HAGERSTOWN, MARYLAND

LANDSCAPE PLAN AND DETAILS

ZONING: BL | WATERSHED CODE: 02140502 ANTIETAM CREEK | ELEC. DIST.: 18
TAX MAP: 0025 | GRID: 0020 | PARCEL: 0629(p.o 0113)

TRIAD ENGINEERING, INC.
www.triadeng.com

SHEET NUMBER:
C.5.0
JOB NO.: 03-22-0792

SEQUENCE OF OPERATIONS

I. NOTIFICATION

A. FIVE (5) DAYS PRIOR TO THE START OF CONSTRUCTION NOTIFY THE WASHINGTON COUNTY SOIL CONSERVATION DISTRICT AT (301) 797-6821 TO SCHEDULE A PRE CONSTRUCTION MEETING.
B. NOTIFY THE WASHINGTON COUNTY DIVISION OF PUBLIC WORKS (ENGINEERING & CONSTRUCTION) 5 DAYS PRIOR TO THE START OF CONSTRUCTION AT (240) 313-2400 TO SCHEDULE A PRE CONSTRUCTION MEETING.
C. NOTIFY THE WASHINGTON COUNTY PLANNING DEPARTMENT (ENGINEERING & LAND USE PLAN REVIEW) 5 DAYS PRIOR TO THE START OF CONSTRUCTION AT (240) 313-2442 TO SCHEDULE A PRE CONSTRUCTION MEETING.
D. NOTIFY TRIAD ENGINEERING, INC. OF PRE-CONSTRUCTION MEETING TIME AND DATE - (301) 797-6400.

II. PHASE 1 - INITIAL STABILIZATION

A. INSTALL STABILIZED CONSTRUCTION ENTRANCE. INSTALL TEMPORARY PIPE AS PART OF SCE CONSTRUCTION.
B. INSTALL SILT FENCE, SMART FENCE, TEMPORARY FILTER DIKES AND INLET PROTECTION AT EXISTING INLETS AS SHOWN WITHIN THE LIMITS OF DISTURBANCE (LOD).

III. PHASE 2 - INITIAL GRADING ACTIVITIES

A. STRIP TOPSOIL FROM GRADING AREA AND PLACE IN SOILS STOCKPILE AREA AND INSTALL SOIL/EROSION SEDIMENT CONTROLS ON THE DOWNHILL SIDE OF STOCKPILE. ANY SPOIL AND OR BORROW MUST GO TO OR COME FROM A SITE THAT HAS A CURRENT AND APPROVED SOIL EROSION AND SEDIMENT CONTROL PLAN. TEMPORALLY SEED AND MULCH SOILS STOCKPILE AS PER SEEDING AND STABILIZATION NOTES THIS SHEET.
B. BEGIN ROUGH GRADING OF SOUTH END OF SITE (AREA OF BUILDINGS 6-8). GENERALLY MOVING SOIL FROM SOUTHWEST CORNER OF SITE TO NORTHEAST PORTION OF SITE. TEMPORARY SEED AND MULCH IN ACCORDANCE WITH SEEDING AND STABILIZATION NOTES PER SHEET C.6.1 AS REQUIRED.
C. BEGINNING FROM DOWNSTREAM TO UPSTREAM INSTALL PIPES B AND C WITH REQUIRED HEADWALL/RETAINING WALL. SDMH C AND END SECTION. PROVIDE BRICK INSIDE SDMH C TO CLOSE OFF PIPE D INFLOW UNTIL PIPE D IS CONSTRUCTED WITH SWM STRUCTURES AT END OF CONSTRUCTION. INSTALL ROCK OUTLET PROTECTION PER THIS SHEET AND NOTES AND DETAILS ON SHEET C.6.1. UPON COMPLETION, TIE SMART FENCE 42 INTO THE OUTLET AS SHOWN PER PLAN.
D. UTILIZE ANY EXCESS FILL FROM SOUTH PORTION OF SITE AS WELL AS OFFSITE BORROW MATERIAL FOR FILL IN ROUGH GRADING OPERATIONS TOWARDS THE NORTHERN PORTION OF THE SITE (BUILDINGS 4-5). BEGINNING FROM DOWNSTREAM TO UPSTREAM, INSTALL PIPE A AND ASSOCIATED END SECTIONS DURING FILL OPERATIONS IN THIS PORTION OF THE SITE. INSTALL ROCK OUTLET PROTECTION PER THIS SHEET AND NOTES AND DETAILS ON SHEET C.6.1. UPON COMPLETION, TIE SMART FENCE 42 INTO THE OUTLETS AS SHOWN PER PLAN.
E. TEMPORARY SEED AND MULCH IN ACCORDANCE WITH SEEDING AND STABILIZATION NOTES PER SHEET C.6.1 AS REQUIRED.

IV. PHASE 3 - STORAGE WAREHOUSES CONSTRUCTION

A. FINE GRADE AREA FOR STORAGE WAREHOUSES AND DRIVE AREAS.
B. CONSTRUCT STORAGE WAREHOUSES AND PAVING (BOTH CONVENTIONAL AND PERMEABLE) AND RETAINING WALLS, CURB AND OTHER SITE STRUCTURES.
C. REPLACE TOPSOIL OVER GRADED AREAS AND TEMPORARY SEED AND MULCH IN ACCORDANCE WITH SEEDING AND STABILIZATION NOTES SHEET C.6.1.

V. PHASE 4 - STORMWATER BMP CONSTRUCTION

A. UPON UPGRADE SITE STABILIZATION IN PLACE AS SPECIFIED AND BUILDING CONSTRUCTION COMPLETE, NOTIFY WASHINGTON COUNTY SOIL CONSERVATION AT 301-797-6821 AND WASHINGTON COUNTY DIVISION OF PUBLIC WORKS (ENGINEERING AND CONSTRUCTION) AT 240-313-2400 FOR NOTICE TO PROCEED WITH CONSTRUCTION OF STORMWATER MANAGEMENT STRUCTURES.
B. WITH NOTICE TO PROCEED CONSTRUCT SWM BIO-RETENTION FACILITIES AND CORRESPONDING STORM DRAIN SYSTEMS. INSTALL STANDARD INLET PROTECTION ON NEW INLETS WITHIN BIO-RETENTION STRUCTURES UNTIL CONSTRUCTION COMPLETION. INSTALL PIPES 103 AND PIPE D RESPECTIVELY. REMOVE BRICK FROM SDMH C TO ALLOW FOR CONNECTION OF PIPE D.
C. REPLACE TOPSOIL OVER GRADED AREAS AND FINAL SEED AND MULCH IN ACCORDANCE WITH PERMANENT SEEDING AND STABILIZATION NOTES THIS SHEET. INSTALL LANDSCAPING WITHIN STORMWATER MANAGEMENT AREAS.
D. INSTALL REMAINING SITE FEATURES, SUCH AS FENCING, SIGNS, ADDITIONAL LANDSCAPING, ETC.

VI. PHASE 5 - CLOSE-OUT

A. UPON SITE STABILIZATION IN PLACE WITH VEGETATIVE COVER, NOTIFY THE WASHINGTON COUNTY SOIL CONSERVATION DISTRICT AT (301) 797-6821 AT LEAST 5 DAYS PRIOR TO THE REMOVAL OF ANY SOIL EROSION AND SEDIMENT CONTROL FEATURES, TO SCHEDULE A FINAL SITE CLOSE-OUT REVIEW MEETING. (VEGETATION MUST MEET THE 95% OVERALL STABILIZATION REQUIREMENT PER THE 2011 MARYLAND STANDARDS AND SPECIFICATIONS FOR SOIL EROSION AND SEDIMENT CONTROL PRIOR TO SCHEDULING SAID MEETING)
B. UPON APPROVAL BY WASHINGTON COUNTY SOIL CONSERVATION DISTRICT REMOVE PHASE 1 SEDIMENT CONTROL DEVICES.
C. FINAL GRADE AND STABILIZE AREA OF SEDIMENT CONTROL REMOVAL WITH FINAL SEEDING AND MULCH.

PROPOSED START - FINISH CONSTRUCTION
FEBRUARY 2024 - SEPTEMBER 2024

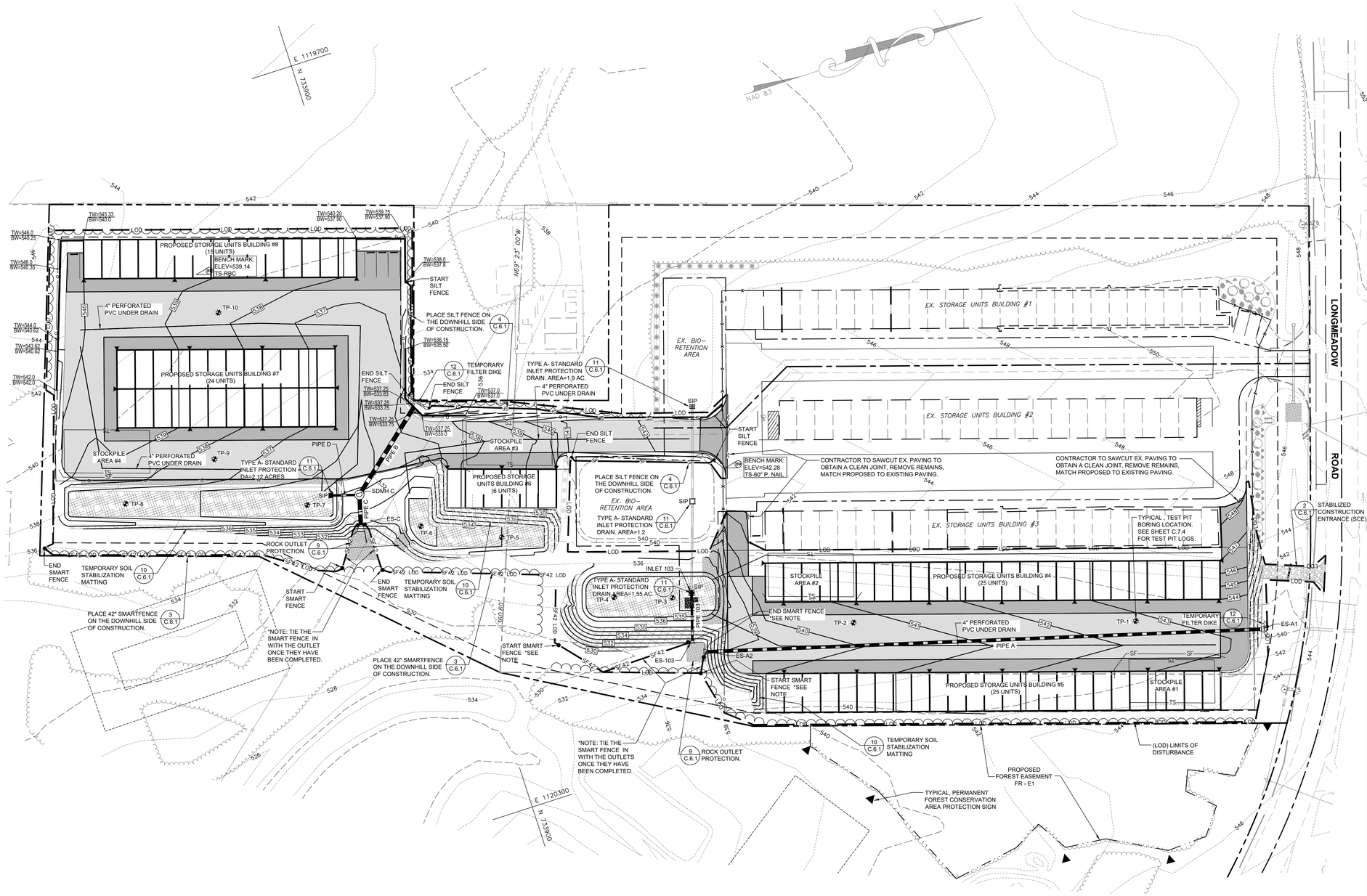

GRAPHIC SCALE

40 0 20 40 80 160

(IN FEET)
1 inch = 40 ft.

SOIL TYPE ON SITE

SYMBOL	DESCRIPTION	K FACTOR (WHOLE)	HYDROLOGIC SOILS GROUP
HcC	HAGERSTOWN-ROCK OUTCROP COMPLEX, 8 TO 15% SLOPES	0.32	B

OWNER/DEVELOPER:
JOHN R. OLIVER CO., INC.
C/O TAYLOR OLIVER
19733 LEITERSBURG PIKE
HAGERSTOWN, MD 21742
PHONE: 301-797-0000

SP-23-033

TRIAD ENGINEERING, INC.
1075-D SHERMAN AVENUE
HAGERSTOWN, MD 21740
PH: 301.797.6400 FAX: 301.797.2424
OFFICE LOCATIONS
MARYLAND ◇ PENNSYLVANIA ◇ VIRGINIA ◇ WEST VIRGINIA

REV. #	DATE	DESCRIPTION	BY
2	11-21-2023	PER WCSCD REVIEW COMMENTS	
1	11-21-2023	PER WASH CO. FOREST CONSERV. PLAN REVIEW COMMENTS	

CADD FILE: 03-22-0792-PH2-C-3-0
DRAWN BY: STAFF
CHECKED BY: BJS
DATE: 12-22-2022
SCALE: 1"=40'

I HEREBY CERTIFY THAT THESE DOCUMENTS WERE PREPARED OR APPROVED BY ME, AND THAT I AM A DULY LICENSED PROFESSIONAL ENGINEER UNDER THE LAWS OF THE STATE OF MARYLAND. LICENSE NO. 34688 EXPIRATION DATE: 7-09-25

STATE OF MARYLAND — BRIAN JON SHUTTLES — No. 34688 — PROFESSIONAL ENGINEER

12-04-2023

SITE PLAN
NORTH END STORAGE II - PHASE 2
SITUATED ON SOUTH SIDE LONGMEADOW ROAD, 0.25 MILES WEST OF ITS INTERSCTION WITH MARYLAND ROUTE 60, HAGERSTOWN, MARYLAND
EROSION AND SEDIMENT CONTROL PLAN

ZONING: BL | WATERSHED CODE: 02140502 ANTIETAM CREEK | ELEC. DIST.: 18
TAX MAP: 0025 | GRID: 0020 | PARCEL: 0628

TRIAD ENGINEERING, INC.
www.triadeng.com

SHEET NUMBER:
C.6.0
JOB NO.: 03-22-0792

SOIL EROSION, SEDIMENT CONTROL, & SEEDING NOTES

1. All soil erosion/sediment control measures shall comply with the "2011 Maryland Standards and Specifications for Soil Erosion and Sediment Control" and the provisions of the approved plan.
2. All grading and stabilization shall comply with the "2011 Maryland Standards and Specifications for Soil Erosion and Sediment Control", "Section B - Grading and Stabilization" and the provisions of the approved plan.
3. All soil erosion and sediment control practices (BMP's) are to be constructed and/or installed prior to or at the initiation of grading in accordance with "2011 Maryland Standards and Specifications for Soil Erosion and Sediment Control", and the approved plan.
4. A grading unit is the maximum contiguous area allowed to be graded at a given time and is limited to 20 acres. Work may proceed to a subsequent grading unit when at least 50 percent of the disturbed area in the preceding grading unit has been stabilized and approved by the enforcement authority and/or the Washington County Soil Conservation District (approval authority). Unless otherwise specified and approved by the approval authority, no more than 30 acres cumulatively may be disturbed at a given time.
5. For initial soil disturbance or re-disturbance, temporary or permanent stabilization must be completed within:

a) Three (3) calendar days as to the surface of all perimeter dikes, swales, ditches, perimeter slopes, and all slopes steeper than 3 horizontal to 1 vertical (3:1); and
b) Seven (7) calendar days as to all other disturbed or graded areas on the project site not under active grading.

6. Stockpiles must be stabilized in accordance within the 7 day stabilization requirement, as well as, Standard B-4-1 Incremental Stabilization and Standard B-4-4 Temporary Stabilization (as applicable).
7. All constructed channels and swales shall have specified treatment installed to the design flow depth completed downstream to upstream as construction progresses. An installation detail shall be shown on the plans.
8. All storm drain and sanitary sewer lines not in paved areas are to be mulched and seeded within 3 days of initial backfill unless otherwise specified on plans.
9. Electric Power, telephone, and gas lines are to be compacted, seeded, and mulched within 3 days after initial backfill unless otherwise specified on plans.
10. No slope shall be greater than 2:1.
11. As required by Section B, of the Maryland Standards and Specifications for Soil Erosion and Sediment Control, "Adequate Vegetative Stabilization", is defined as 95 percent ground cover. The Washington County Soil Conservation District requires the project adhere to this for scheduling of the Final Site Closeout Review, and/or release of the site for soil erosion and sediment control.

1 SEDIMENT AND EROSION CONTROL NOTES
NOT TO SCALE

DETAIL B-1 STABILIZED CONSTRUCTION ENTRANCE — SCE

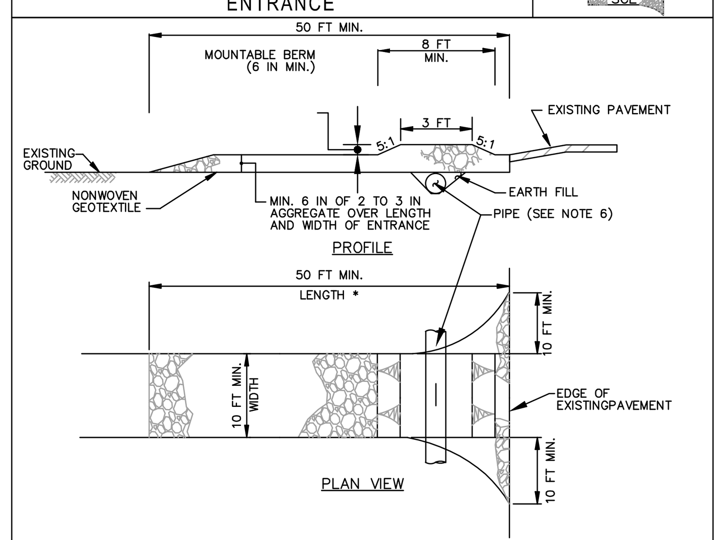

CONSTRUCTION SPECIFICATIONS

1. PLACE STABILIZED CONSTRUCTION ENTRANCE IN ACCORDANCE WITH THE APPROVED PLAN. VEHICLES MUST TRAVEL OVER THE ENTIRE LENGTH OF THE SCE. USE MINIMUM LENGTH OF 50 FEET (*30 FEET FOR SINGLE RESIDENCE LOT). USE MINIMUM WIDTH OF 10 FEET. FLARE SCE 10 FEET MINIMUM AT THE EXISTING ROAD TO PROVIDE A TURNING RADIUS.
2. PIPE ALL SURFACE WATER FLOWING TO OR DIVERTED TOWARD THE SCE UNDER THE ENTRANCE, MAINTAINING POSITIVE DRAINAGE. PROTECT PIPE INSTALLED THROUGH THE SCE WITH A MOUNTABLE BERM WITH 5:1 SLOPES AND A MINIMUM OF 12 INCHES OF STONE OVER THE PIPE. PROVIDE PIPE AS SPECIFIED ON APPROVED PLAN. WHEN THE SCE IS LOCATED AT A HIGH SPOT AND HAS NO DRAINAGE TO CONVEY, A PIPE IS NOT NECESSARY. A MOUNTABLE BERM IS REQUIRED WHEN SCE IS NOT LOCATED AT A HIGH SPOT.
3. PREPARE SUBGRADE AND PLACE NONWOVEN GEOTEXTILE, AS SPECIFIED IN SECTION H-1 MATERIALS.
4. PLACE CRUSHED AGGREGATE (2 TO 3 INCHES IN SIZE) OR EQUIVALENT RECYCLED CONCRETE (WITHOUT REBAR) AT LEAST 6 INCHES DEEP OVER THE LENGTH AND WIDTH OF THE SCE.
5. MAINTAIN ENTRANCE IN A CONDITION THAT MINIMIZES TRACKING OF SEDIMENT. ADD STONE OR MAKE OTHER REPAIRS AS CONDITIONS DEMAND TO MAINTAIN CLEAN SURFACE, MOUNTABLE BERM, AND SPECIFIED DIMENSIONS. IMMEDIATELY REMOVE STONE AND/OR SEDIMENT SPILLED, DROPPED, OR TRACKED ONTO ADJACENT ROADWAY BY VACUUMING, SCRAPING, AND/OR SWEEPING. WASHING ROADWAY TO REMOVE MUD TRACKED ONTO PAVEMENT IS NOT ACCEPTABLE UNLESS WASH WATER IS DIRECTED TO AN APPROVED SEDIMENT CONTROL PRACTICE.

MARYLAND STANDARDS AND SPECIFICATIONS FOR SOIL EROSION AND SEDIMENT CONTROL

U.S. DEPARTMENT OF AGRICULTURE NATURAL RESOURCES CONSERVATION SERVICE	2011	MARYLAND DEPARTMENT OF ENVIRONMENT WATER MANAGEMENT ADMINISTRATION

2 STABILIZED CONSTRUCTION ENTRANCE
NOT TO SCALE

LET'S GET IT DONE

SMARTfence® 42 Detail:

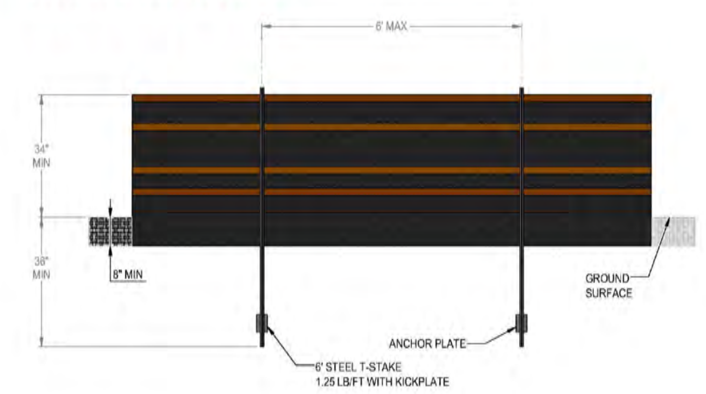

SMARTfence® 42 is NTPEP Compliant
GTX-2018-01-187

ACF ENVIRONMENTAL — LET'S GET IT DONE®
800.448.3636
acfenvironmental.com

SMARTFENCE 42" — SEDIMENT & PERIMETER CONTROL
INSTALLATION INSTRUCTIONS

STEP 1: EXCAVATE TRENCH
Excavate trench a maximum of 4" wide and 6" deep. The trench shall be hand-cleaned following excavation to remove bulky debris such as rocks, sticks, and soil clods.

STEP 2: PREPARE FENCE
Lay SMARTfence 42 out on the ground along the proposed fence line and next to the anchor trench. Reference NOTE ONE prior to beginning.

STEP 3: INSTALL INITIAL POST
3A) For the initial post, place the end of SMARTfence 42 along the post height and rotate the post 360 degrees, maintaining tension on the fabric. Secure the fence to the post at all four (4) orange-colored band locations with steel wire or nylon ties as per NOTE TWO.

3B) Drive the initial post (72" metal t-post) with the attached fence to a depth of 36" below surface.

STEP 4: INSTALL INTERIOR POSTS
Using spacing no greater than 6' on center, drive interior posts to 36" depth below surface and attach the fencing as you go (see NOTE ONE and SMARTfence detail on page 2).

To attach fencing, position SMARTfence 42 in front of the adjacent t-post, pulling the fencing tight and fasten it to the post at all four (4) orange-colored band locations (as per NOTE TWO). It is critical that SMARTfence 42 is pulled tight prior to attaching it to each interior post.

STEP 5: INSTALL FINAL POST
After the interior posts have been fastened, secure the fence to the final post by pulling the final section of fencing taut, and then rotating the post 360 degrees while maintaining tension on the fence system. Secure the fence to the post at all four (4) orange-colored band locations with the steel wire or nylon ties as per NOTE TWO. Drive the final post into the ground to a 36" depth below the surface.

STEP 6: BACKFILL TRENCH
Ensure bottom 8" of fabric has been placed in trench. Backfill trench (overfill) with soil placed around fabric. Compact soil backfill manually or via mechanical equipment such as the front wheel of a tractor, skid steer, roller, or other device (per Note 5 of ASTM D 6462 Standard Practice for Silt Fence Installation).

**Be careful not to damage the fabric during compaction (damaged fabric will not be replaced).

NOTE ONE - INSTALL SPECIFICATIONS:
SMARTfence 42 shall be installed using a 6' (72") metal t-post, 1.25 lbs per foot with a kick plate embedded 3' (36") deep on no more than 6' (72") centers (see detail on page 2.)

NOTE TWO - SUPPLIES FOR ATTACHING FENCING:
To fasten SMARTfence 42 to studded, metal T-posts, use one of following methods:

- Steel wire: Wire-attach SMARTfence 42 to metal T-posts using 16-gage 304 SS wire with mitered ends, securing with safety pliers.

- Nylon ties: Puncture two 0.25" openings, spaced at a width apart that is roughly equivalent to the post width, and secure the fence to the post using 8" nylon heavy-duty cable ties (zip-ties) that are UV resistant and have a minimum 120-lb tensile strength.

Please contact our team at 800-448-3636 or info@acfenv.com with any questions regarding the installation process.

SMARTfence

For more information, contact our Inside Sales team at 800.448.3636 email at info@acfenv.com

3 SMARTFENCE 42"
NOT TO SCALE

DETAIL E-1 SILT FENCE — STANDARD SYMBOL —SF—

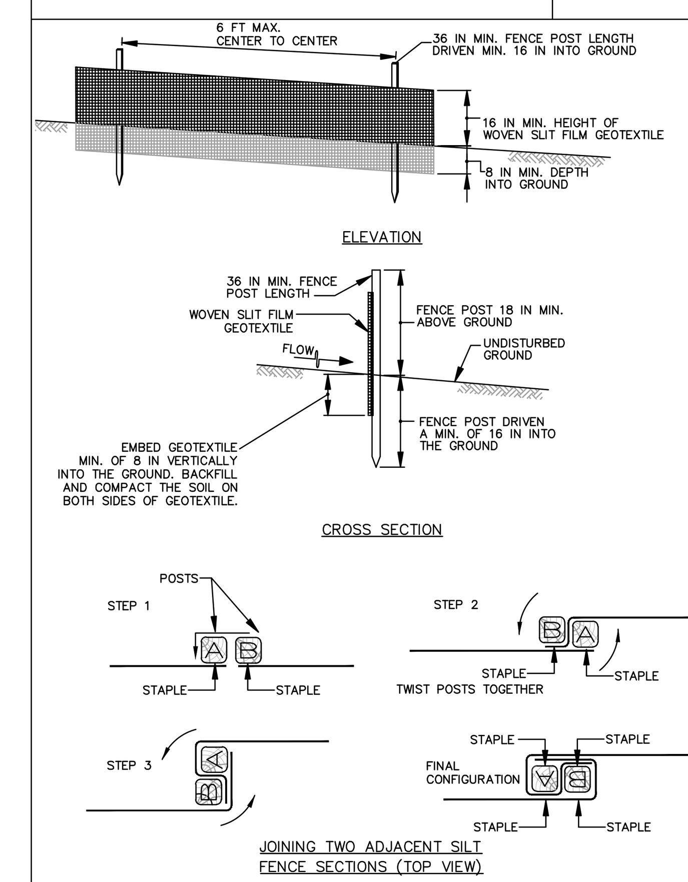

MARYLAND STANDARDS AND SPECIFICATIONS FOR SOIL EROSION AND SEDIMENT CONTROL

U.S. DEPARTMENT OF AGRICULTURE NATURAL RESOURCES CONSERVATION SERVICE	2011	MARYLAND DEPARTMENT OF ENVIRONMENT WATER MANAGEMENT ADMINISTRATION

4 SILT FENCE
NOT TO SCALE

TEMPORARY SEEDING SUMMARY

HARDINESS ZONE (FROM FIGURE B.3): 6-b
SEED MIXTURE (FROM TABLE B.1):

No.	SPECIES	APPLICATION RATE (LB. / AC.)	SEEDING DATES	SEEDING DEPTHS (inches)	FERTILIZER RATE (10-20-20)	LIME RATE
	BARLEY (HORDEUM VULGARE)	96 lb/ac. 2.2 lb/1000 s.f.	MAR. 1 - MAY 15 AUG. 1 - OCT. 15	1.0	436 lb./ac. (10 lb./1,000 sq.ft.)	2 tons/ac. (90 lb./1,000 sq.ft.)

5 TEMPORARY SEEDING NOTES
NOT TO SCALE

PERMANENT SEEDING SUMMARY

HARDINESS ZONE (FROM FIGURE B.3): 6-b
SEED MIXTURE (FROM TABLE B.3):

No.	SPECIES	APPLICATION RATE (LB. / AC.)	SEEDING DATES	SEEDING DEPTHS (inches)	FERTILIZER RATE (10-20-20) N	P205	K20	LIME RATE
6	TALL FESCUE (85%)	40	MAR. 1-MAY 15 AUG. 1-OCT. 15	¼" - ½"	45 lb./ac. (1.0 lb./ 1,000 sq.ft.)	90 lb/ac. (2 lb./1,000 sq.ft.)	90 lb/ac. (2 lb./1,000 sq.ft.)	2 tons/ac. (90 lb./1,000 sq.ft.)
	PERENNIAL RYEGRASS (10%)	25	MAR. 1-MAY 15 AUG. 1-OCT. 15	¼" - ½"				
	WHITE CLOVER (5%)	5	MAR. 1-MAY 15 AUG. 1-OCT. 15	¼" - ½"				

6 PERMANENT SEEDING NOTES
NOT TO SCALE

DETAIL D-4-1-B ROCK OUTLET PROTECTION II — STANDARD SYMBOL ROPII

DISCHARGE TO CONFINED CHANNEL SECTION

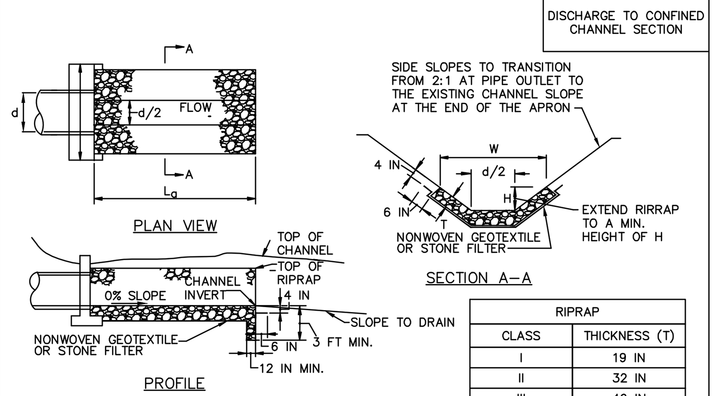

RIPRAP	
CLASS	THICKNESS (T)
I	19 IN
II	32 IN
III	46 IN

CONSTRUCTION SPECIFICATIONS

1. RIPRAP AND STONE MUST CONFORM TO THE SPECIFIED CLASS.
2. USE NONWOVEN GEOTEXTILE AS SPECIFIED IN SECTION H-1 MATERIALS, AND PROTECT FROM PUNCTURING, CUTTING, OR TEARING. REPAIR ANY DAMAGE OTHER THAN AN OCCASIONAL SMALL HOLE BY PLACING ANOTHER PIECE OF GEOTEXTILE OVER THE DAMAGED PART OR BY COMPLETELY REPLACING THE GEOTEXTILE. PROVIDE A MINIMUM OF ONE FOOT OVERLAP FOR ALL REPAIRS AND FOR JOINING TWO PIECES OF GEOTEXTILE TOGETHER.
3. PREPARE THE SUBGRADE FOR GEOTEXTILE OR STONE FILTER (⅜ TO 1½ INCH STONE FOR 6 INCH MINIMUM DEPTH) AND RIPRAP TO THE REQUIRED LINES AND GRADES. COMPACT ANY FILL REQUIRED IN THE SUBGRADE TO A DENSITY OF APPROXIMATELY THAT OF THE SURROUNDING UNDISTURBED MATERIAL.
4. EXTEND GEOTEXTILE AT LEAST 6 INCHES BEYOND EDGES OF RIPRAP AND EMBED AT LEAST 4 INCHES AT SIDES OF RIPRAP.
5. CONSTRUCT RIPRAP OUTLET TO FULL COURSE THICKNESS IN ONE OPERATION AND IN SUCH A MANNER AS TO AVOID DISPLACEMENT OF UNDERLYING MATERIALS. PLACE STONE FOR RIPRAP OUTLET IN A MANNER THAT WILL ENSURE THAT IT IS REASONABLY HOMOGENOUS WITH THE SMALLER STONES AND SPALLS FILLING THE VOIDS BETWEEN THE LARGER STONES. PLACE RIPRAP IN A MANNER TO PREVENT DAMAGE TO THE STONE FILTER BLANKET OR GEOTEXTILE. HAND PLACE TO THE EXTENT NECESSARY.
6. WHERE NO ENDWALL IS USED, CONSTRUCT THE UPSTREAM END OF THE APRON SO THAT THE WIDTH IS TWO TIMES THE DIAMETER OF THE OUTLET PIPE, AND EXTEND THE STONE UNDER THE OUTLET BY A MINIMUM OF 18 INCHES.
7. CONSTRUCT APRON WITH 0% SLOPE ALONG ITS LENGTH AND WITHOUT OBSTRUCTIONS. PLACE STONE SO THAT IT BLENDS IN WITH EXISTING GROUND.
8. MAINTAIN LINE, GRADE, AND CROSS SECTION. KEEP OUTLET FREE OF EROSION. REMOVE ACCUMULATED SEDIMENT AND DEBRIS. AFTER HIGH FLOWS INSPECT FOR SCOUR AND DISLODGED RIPRAP. MAKE NECESSARY REPAIRS IMMEDIATELY.

MARYLAND STANDARDS AND SPECIFICATIONS FOR SOIL EROSION AND SEDIMENT CONTROL

U.S. DEPARTMENT OF AGRICULTURE NATURAL RESOURCES CONSERVATION SERVICE	2011	MARYLAND DEPARTMENT OF ENVIRONMENT WATER MANAGEMENT ADMINISTRATION

7 ROCK OUTLET PROTECTION II
NOT TO SCALE

DETAIL D-4-1-C ROCK OUTLET PROTECTION III — STANDARD SYMBOL ROPIII

DISCHARGE TO AN UNCONFINED CHANNEL OR FLAT AREA

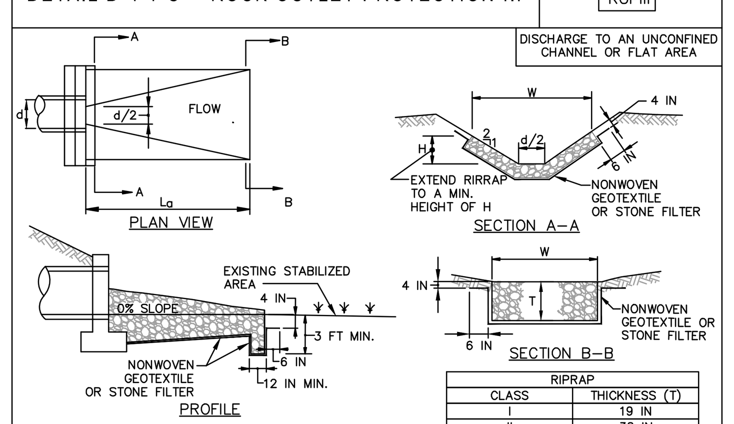

RIPRAP	
CLASS	THICKNESS (T)
I	19 IN
II	32 IN
III	46 IN

CONSTRUCTION SPECIFICATIONS

1. RIPRAP AND STONE MUST CONFORM TO THE SPECIFIED CLASS.
2. USE NONWOVEN GEOTEXTILE, AS SPECIFIED IN SECTION H-1 MATERIALS, AND PROTECT FROM PUNCTURING, CUTTING, OR TEARING. REPAIR ANY DAMAGE OTHER THAN AN OCCASIONAL SMALL HOLE BY PLACING ANOTHER PIECE OF GEOTEXTILE OVER THE DAMAGED PART OR BY COMPLETELY REPLACING THE GEOTEXTILE. PROVIDE A MINIMUM OF ONE FOOT OVERLAP FOR ALL REPAIRS AND FOR JOINING TWO PIECES OF GEOTEXTILE TOGETHER.
3. PREPARE THE SUBGRADE FOR GEOTEXTILE OR STONE FILTER (⅜ TO 1½ INCH MINIMUM STONE FOR 6 INCH MINIMUM DEPTH) AND RIPRAP TO THE REQUIRED LINES AND GRADES. COMPACT ANY FILL REQUIRED IN THE SUBGRADE TO A DENSITY OF APPROXIMATELY THAT OF THE SURROUNDING UNDISTURBED MATERIAL.
4. EXTEND GEOTEXTILE AT LEAST 6 INCHES BEYOND EDGES OF RIPRAP AND EMBED AT LEAST 4 INCHES AT SIDES OF RIPRAP.
5. CONSTRUCT RIPRAP OUTLET TO FULL COURSE THICKNESS IN ONE OPERATION AND IN SUCH A MANNER AS TO AVOID DISPLACEMENT OF UNDERLYING MATERIALS. PLACE STONE FOR RIPRAP OUTLET IN A MANNER THAT WILL ENSURE THAT IT IS REASONABLY HOMOGENOUS WITH THE SMALLER STONES AND SPALLS FILLING THE VOIDS BETWEEN THE LARGER STONES. PLACE RIPRAP IN A MANNER TO PREVENT DAMAGE TO THE FILTER BLANKET OR GEOTEXTILE. HAND PLACE TO THE EXTENT NECESSARY.
6. WHERE NO ENDWALL IS USED, CONSTRUCT THE UPSTREAM END OF THE APRON SO THAT THE WIDTH IS TWO TIMES THE DIAMETER OF THE OUTLET PIPE, AND EXTEND THE STONE UNDER THE OUTLET BY A MINIMUM OF 18 INCHES.
7. CONSTRUCT APRON WITH 0% SLOPE ALONG ITS LENGTH AND WITHOUT OBSTRUCTIONS. PLACE STONE SO THAT IT BLENDS IN WITH EXISTING GROUND.
8. MAINTAIN LINE, GRADE, AND CROSS SECTION. KEEP OUTLET FREE OF EROSION. REMOVE ACCUMULATED SEDIMENT AND DEBRIS. AFTER HIGH FLOWS INSPECT FOR SCOUR AND RIPRAP DISLODGED RIPRAP. MAKE NECESSARY REPAIRS IMMEDIATELY.

MARYLAND STANDARDS AND SPECIFICATIONS FOR SOIL EROSION AND SEDIMENT CONTROL

U.S. DEPARTMENT OF AGRICULTURE NATURAL RESOURCES CONSERVATION SERVICE	2011	MARYLAND DEPARTMENT OF ENVIRONMENT WATER MANAGEMENT ADMINISTRATION

8 ROCK OUTLET PROTECTION III
NOT TO SCALE

NOTES:
1. SEE N.R.C.S. RIP-RAP DETAIL FOR INFORMATION CONCERNING THE INSTALLATION OF RIPRAP OUTLET PROTECTION.
2. TRAPEZOIDAL PORTION OF OUTLET PROTECTION AT MAXIMUM 2:1 SLOPE.

CLASS I RIP-RAP OULET PROTECTION.
D_{50}=9.5" D_{MAX}=15"
MIN. DEPTH=19"
ON CLASS 'SE' FILTER CLOTH AT 0% SLOPE

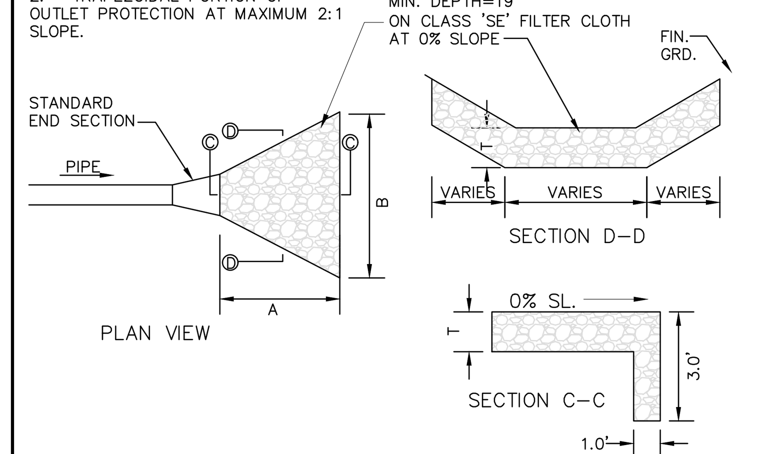

ROCK OUTLET PROTECTION CHART								
NAME	PIPE SIZE / TYPE	RIPRAP SIZE	PROTECTION TYPE	Q_{10} (cfs)	V_{10} (fps)	A (ft.)	B (ft.)	T (in.)
PIPE A	24" HDPE	CLASS I	ROPII	17.21	10.56	13	15	19
PIPE C	30" HDPE	CLASS I	ROPIII	49.10	10.15	22	24.5	19
PIPE 103	15" HDPE	CLASS I	ROPII	0.90	2.94	8	9.25	19

9 ROCK OUTLET PROTECTION
NOT TO SCALE

DETAIL B-4-6-B TEMPORARY SOIL STABILIZATION MATTING SLOPE APPLICATION — STANDARD SYMBOL TSSMS – * lb/ft² (* INCLUDE SHEAR STRESS)

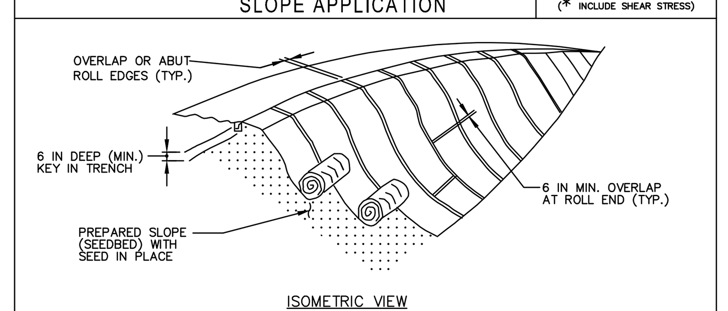

CONSTRUCTION SPECIFICATIONS

1. USE MATTING THAT HAS A DESIGN VALUE FOR SHEAR STRESS EQUAL TO OR HIGHER THAN THE SHEAR STRESS DESIGNATED ON APPROVED PLANS.
2. USE TEMPORARY SOIL STABILIZATION MATTING MADE OF DEGRADABLE (LASTS 6 MONTHS MINIMUM) NATURAL OR MAN-MADE FIBERS (MOSTLY ORGANIC). MAT MUST HAVE UNIFORM THICKNESS AND DISTRIBUTION OF FIBERS THROUGHOUT AND BE SMOLDER RESISTANT. CHEMICALS USED IN THE MAT MUST BE NON-LEACHING AND NON-TOXIC TO VEGETATION AND SEED GERMINATION AND NON-INJURIOUS TO THE SKIN. IF PRESENT, NETTING MUST BE EXTRUDED PLASTIC WITH A MAXIMUM MESH OPENING OF 2x2 INCHES AND SUFFICIENTLY BONDED OR SEWN ON 2 INCH CENTERS ALONG LONGITUDINAL AXIS OF THE MATERIAL TO PREVENT SEPARATION OF THE NET FROM THE PARENT MATERIAL.
3. SECURE MATTING USING STEEL STAPLES, WOOD STAKES, OR BIODEGRADABLE EQUIVALENT. STAPLES MUST BE "U" OR "T" SHAPED STEEL WIRE HAVING A MINIMUM GAUGE OF NO. 11 AND NO. 8 RESPECTIVELY. "U" SHAPED STAPLES MUST AVERAGE 1 TO 1½ INCHES WIDE AND BE A MINIMUM OF 6 INCHES LONG. "T" SHAPED STAPLES MUST HAVE A MINIMUM 8 INCH MAIN LEG, A MINIMUM 1 INCH SECONDARY LEG, AND A MINIMUM 4 INCH HEAD. WOOD STAKES MUST BE ROUGH-SAWN HARDWOOD, 12 TO 24 INCHES IN LENGTH, 1x3 INCH IN CROSS SECTION, AND WEDGE SHAPED AT THE BOTTOM.
4. PERFORM FINAL GRADING, TOPSOIL APPLICATION, SEEDBED PREPARATION, AND PERMANENT SEEDING IN ACCORDANCE WITH SPECIFICATIONS. PLACE MATTING WITHIN 48 HOURS OF COMPLETING SEEDING OPERATIONS UNLESS END OF WORKDAY STABILIZATION IS SPECIFIED ON THE APPROVED EROSION & SEDIMENT CONTROL PLAN.
5. UNROLL MATTING DOWNSLOPE. LAY MAT SMOOTHLY AND FIRMLY UPON THE SEEDED SURFACE. AVOID STRETCHING THE MATTING.
6. OVERLAP OR ABUT ROLL EDGES PER MANUFACTURER RECOMMENDATIONS. OVERLAP ROLL ENDS BY 6 INCHES (MINIMUM), WITH THE UPSLOPE MAT OVERLAPPING ON TOP OF THE DOWNSLOPE MAT.
7. KEY IN THE UPSLOPE END OF MAT 6 INCHES (MINIMUM) BY DIGGING A TRENCH, PLACING THE MATTING ROLL END IN THE TRENCH, STAPLING THE MAT IN PLACE, REPLACING THE EXCAVATED MATERIAL, AND TAMPING TO SECURE THE MAT END IN THE KEY.
8. STAPLE/STAKE MAT IN A STAGGERED PATTERN ON 4 FOOT (MAXIMUM) CENTERS THROUGHOUT AND 2 FOOT (MAXIMUM) CENTERS ALONG SEAMS, JOINTS, AND ROLL ENDS.
9. ESTABLISH AND MAINTAIN VEGETATION SO THAT REQUIREMENTS FOR ADEQUATE VEGETATIVE ESTABLISHMENT ARE CONTINUOUSLY MET IN ACCORDANCE WITH SECTION B-4 VEGETATIVE STABILIZATION.

MARYLAND STANDARDS AND SPECIFICATIONS FOR SOIL EROSION AND SEDIMENT CONTROL

U.S. DEPARTMENT OF AGRICULTURE NATURAL RESOURCES CONSERVATION SERVICE	2011	MARYLAND DEPARTMENT OF ENVIRONMENT WATER MANAGEMENT ADMINISTRATION

10 TEMPORARY SOIL STABILIZATION MATTING SLOPE APPLICATION
NOT TO SCALE

DETAIL E-9-1 STANDARD INLET PROTECTION — STANDARD SYMBOL SIP

NOTE: INLET PROTECTION IS ONLY ADDED FOR ADDITIONAL PROTECTION AND ARE NOT EXPECTED TO RECEIVE FLOW FROM DISTURBED AREAS AS THE INLETS ARE RAISED ABOVE GRADE.

TYPE A MAXIMUM DRAINAGE AREA = ¼ ACRE
TYPE B MAXIMUM DRAINAGE AREA = 1 ACRE

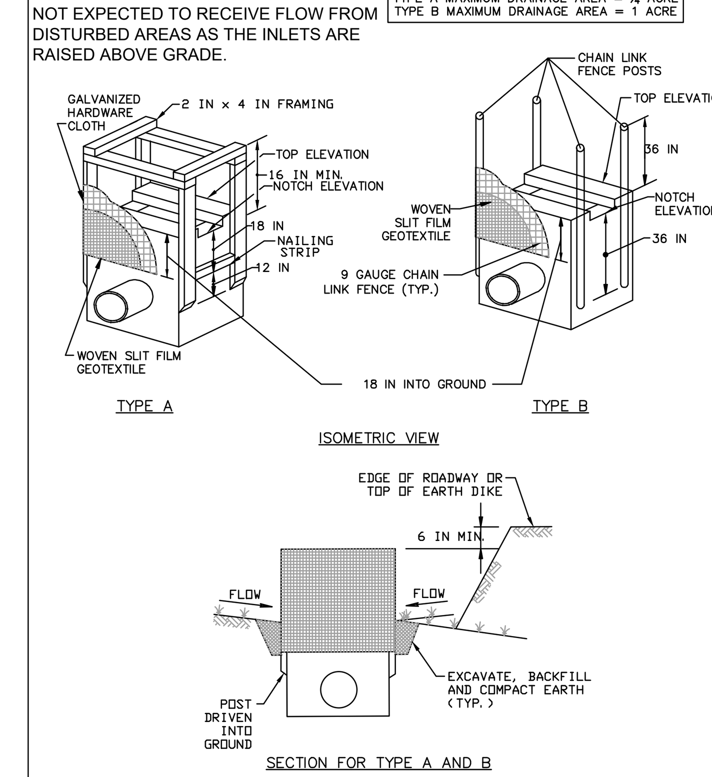

1 OF 2

MARYLAND STANDARDS AND SPECIFICATIONS FOR SOIL EROSION AND SEDIMENT CONTROL

U.S. DEPARTMENT OF AGRICULTURE NATURAL RESOURCES CONSERVATION SERVICE	2011	MARYLAND DEPARTMENT OF ENVIRONMENT WATER MANAGEMENT ADMINISTRATION

11 STANDARD INLET PROTECTION
NOT TO SCALE

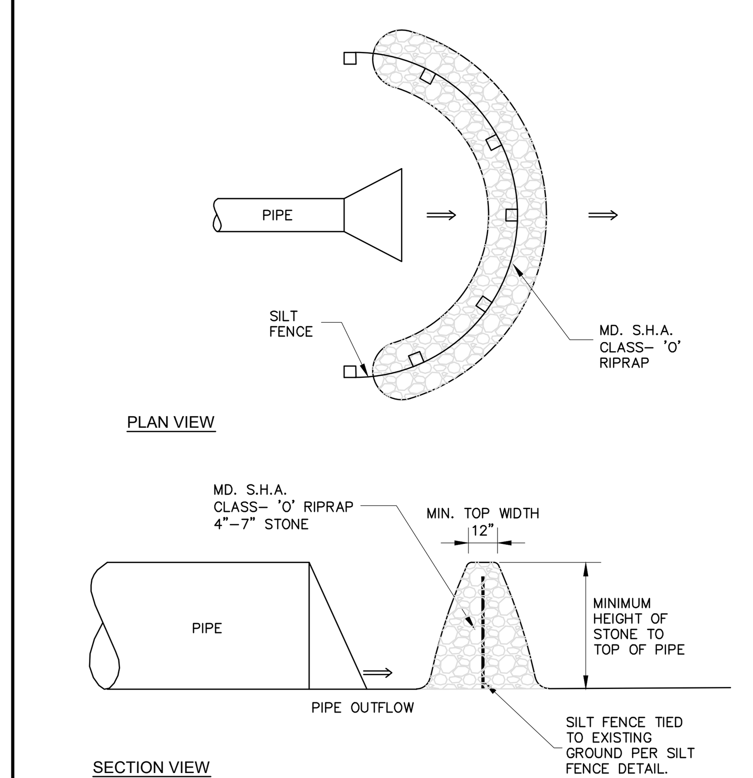

SEE M.D.E. – W.M.A. STANDARD DETAILS E-15-3 AND B-8-5

12 TEMPORARY FILTER DIKE DETAIL
NOT TO SCALE

STANDARD UTILITY NOTES

1. CONTRACTOR TO ONLY OPEN UP LENGTH OF TRENCH THAT CAN BE CONSTRUCTED AND BACKFILLED IN ONE WORKING DAY IN PAVED AREAS.
2. CONTRACTOR TO PLACE EXCAVATED MATERIALS IN A DUMP TRUCK AND HAULED TO AN APPROVED LOCATION TO WASTED MATERIALS TO PAVED AREAS.
3. CONTRACTOR TO BACKFILL TRENCH WITH APPROVED MATERIALS AND STABILIZED DISTURBED AREAS THE SAME WORKING DAY.
4. IN AREAS WHERE THE CONSTRUCTION TAKES TO PLACE OUTSIDE OF THE EXISTING ROADBED, CONTRACTOR TO INSTALL SILT FENCE ALONG THE DOWNHILL SIDE OF THE TRENCH BEFORE BEGINNING CONSTRUCTION AND PLACE EXCAVATED MATERIAL FROM THE TRENCH ON THE UPHILL SIDE.
5. IF DEWATERING OF THE TRENCH IS REQUIRED, CONTRACTOR TO PUMP WATER TO A FILTER BAG TO DEWATER.
6. CONTRACTOR TO SWEEP STREETS OF ANY DEBRIS OR SEDIMENTS CAUSED BY CONSTRUCTION OPERATIONS AND DISPOSE OF AT AN APPROVED LOCATION.
7. CONTRACTOR TO STABILIZE ALL DISTURBED AREAS WITH SEED AND MULCH OR APPROPRIATE STREET REPAIR.

13 STANDARD UTILITY NOTES
NOT TO SCALE

KARST NOTIFICATION

LIMESTONE SOILS ARE SUBJECT TO SINKHOLE DEVELOPMENT. IF ANY SINK HOLES ARE FOUND ONSITE THEY MUST BE EVALUATED BY A GEOTECHNICAL ENGINEER. A REMEDIATION / REPAIR PLAN MUST BE SUBMITTED TO WASHINGTON COUNTY ENGINEERING AND THE WASHINGTON COUNTY SOIL CONSERVATION DISTRICT FOR REVIEW AND APPROVAL PRIOR TO ANY FIELD SINKHOLE REMEDIATION CONSTRUCTION.

14 KARST NOTIFICATION
NOT TO SCALE

UTILITY NOTIFICATION

THE SOIL CONSERVATION DISTRICT MAKES NO REPRESENTATION AS TO THE EXISTENCE OR NONEXISTENCE OF ANY UTILITIES AT THE CONSTRUCTION SITE. SHOWN ON THESE CONSTRUCTION DRAWINGS ARE THOSE UTILITIES WHICH HAVE BEEN IDENTIFIED. IT IS THE RESPONSIBILITY OF THE LANDOWNERS OR OPERATORS AND CONTRACTORS TO ASSURE THEMSELVES THAT NO HAZARD EXISTS OR DAMAGE WILL OCCUR TO UTILITIES. THE LAW REQUIRES PRIOR TO EXCAVATION THAT MISS UTILITY BE CONTACTED AT: PHONE NO. **1-800-257-7777.**

15 UTILITY NOTIFICATION
NOT TO SCALE

For sites 1.0 acre or more, the following are required:

A. Maryland Department of the Environment, General Permit for Stormwater Associated with a Construction Activity, NPDES Permit Number MDRC, State Discharge Permit Number 14GP, or an Individual Permit.

B. The Maryland Department of the Environment (General/Individual Permit - Notice of Intent- NOI) application and permit shall be posted and/or available on-site at all times.

C. During construction, all soil erosion and sediment control practices (BMP's) shall be inspected and recorded on the "Standard Inspection Form", "General Permit for Stormwater Associated with Construction Activity" per the Maryland Department of the Environment (General/Individual Permit - Notice of Intent - NOI).

D. Following construction and release of the sight for soil erosion and sediment control by the Washington County Soil Conservation District, i.e., all portions of a site have been permanently stabilized, and all stormwater discharges from construction sites that are authorized by the permit are eliminated, the authorized permittee shall submit the Maryland Department of the Environment, General/Individual Permit - Notice of Termination-NOT.

OWNER/DEVELOPER:
JOHN R. OLIVER CO., INC.
C/O TAYLOR OLIVER
19733 LEITERSBURG PIKE
HAGERSTOWN, MD 21742
PHONE: 301-797-0000

SP-23-033

TRIAD ENGINEERING, INC.
1075-D SHERMAN AVENUE
HAGERSTOWN, MD 21740
PH: 301.797.6400 FAX: 301.797.2424
OFFICE LOCATIONS
MARYLAND ○ PENNSYLVANIA ○ VIRGINIA ○ WEST VIRGINIA

REV. #	DATE	DESCRIPTION	BY
1	11-21-2023	PER WCSCD REVIEW COMMENTS	

CADD FILE: 03-22-0792-PH2-C-3-0
DRAWN BY: STAFF
CHECKED BY: BJS
DATE: 7-31-2023
SCALE: AS SHOWN

I HEREBY CERTIFY THAT THESE DOCUMENTS WERE PREPARED OR APPROVED BY ME, AND THAT I AM A DULY LICENSED PROFESSIONAL ENGINEER UNDER THE LAWS OF THE STATE OF MARYLAND, LICENSE NO. 34688 EXPIRATION DATE: 7-09-25

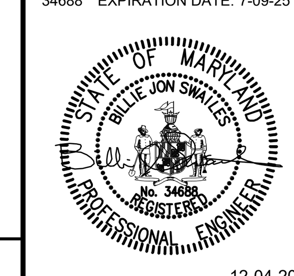

12-04-2023

SITE PLAN
NORTH END STORAGE II - PHASE 2
SITUATED ON SOUTH SIDE LONGMEADOW ROAD, 0.25 MILES WEST OF ITS INTERSCTION WITH MARYLAND ROUTE 60, HAGERSTOWN, MARYLAND
EROSION AND SEDIMENT CONTROL NOTES AND DETAILS

ZONING: BL | WATERSHED CODE: 02140502 ANTIETAM CREEK
TAX MAP: 0025 | GRID: 0020 | PARCEL: 0628/po 0113 | ELEC. DIST.: 18

TRIAD ENGINEERING, INC.
www.triadeng.com

SHEET NUMBER:
C.6.1
JOB NO.: 03-22-0792

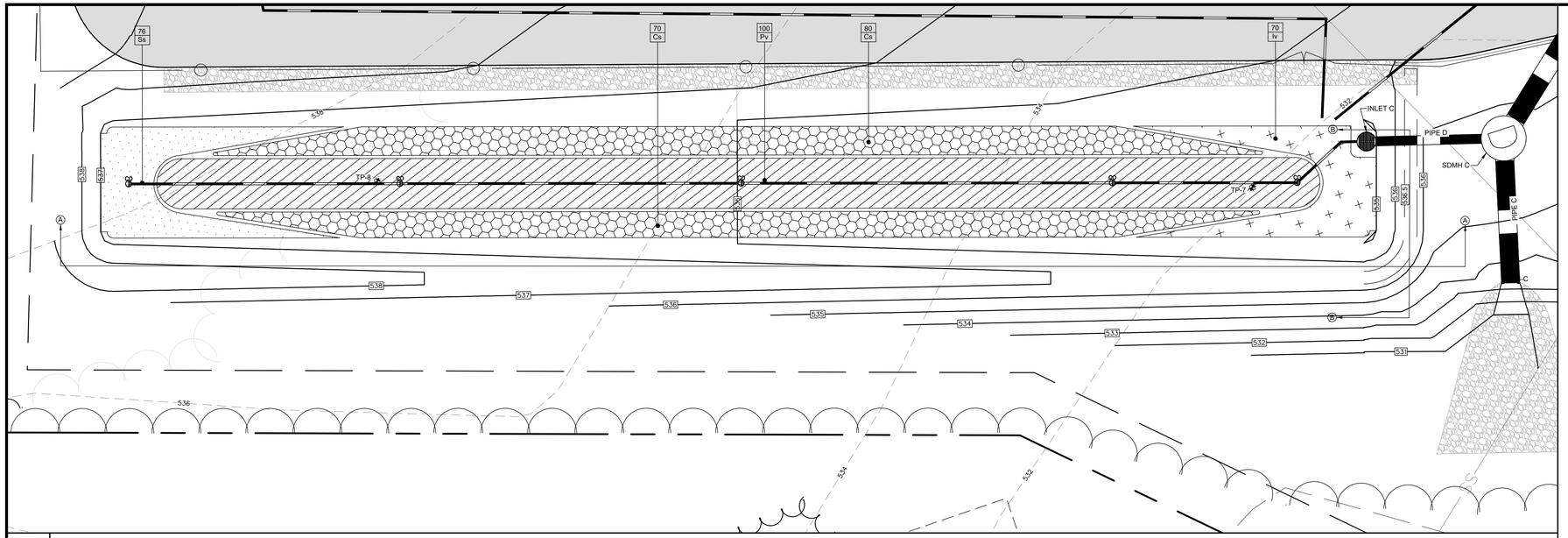

1 BIORETENTION AREA #2 DETAIL PLAN VIEW

SCALE: 1" = 10'

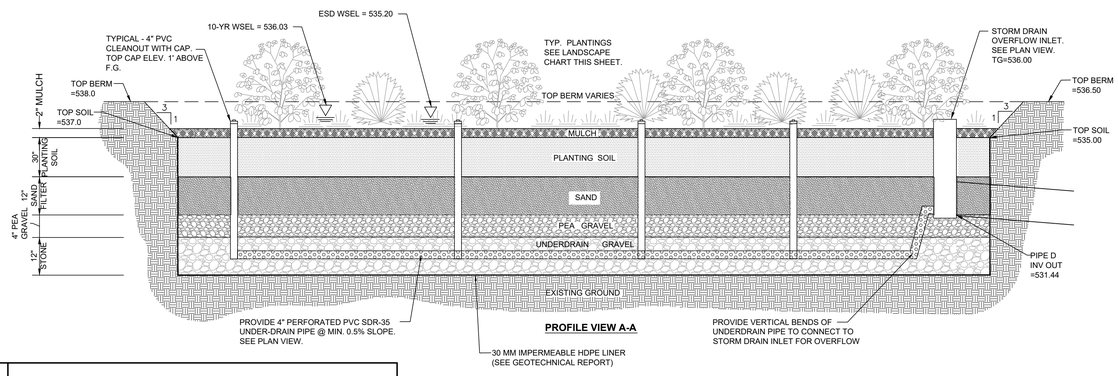

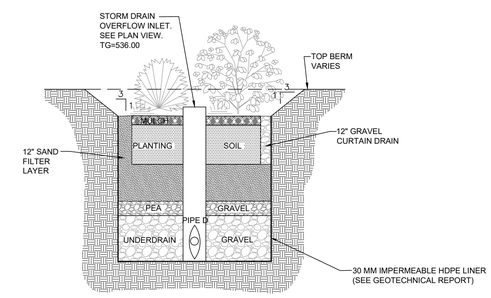

2 BIORETENTION AREA #2 - TYPICAL SECTION DETAIL

NOTE:
CONTRACTOR MUST MINIMIZE COMPACTION WITHIN MICRO-BIORETENTION AREAS. WHEN POSSIBLE, USE EXCAVATION HOES TO REMOVE ORIGINAL SOIL AND TO PLACE REQUIRED MATERIAL TO CONSTRUCT MICRO-BIORETENTION AREAS.

MICRO-BIORETENTION SIZING CHART

	PROVIDED		AS-BUILT	
BMP NUMBER	ESD Vol. (cf.)	Af (sf.)	ESD Vol. (cf.)	Af (sf.)
BIO-2	4,587	4,012		

LANDSCAPE SCHEDULE
BMP M-6 MICRO BIORETENTION NO. MB-1

	SYMBOL	COMMON NAME	BOTANICAL NAME	SIZE	QUANTITY	SPACING
HERBACEOUS PLANTS	Cs	TUSSOCK SEDGE	CAREX STRICTA	#1	150	3ft Stag. O/C
	Iv	BLUE FLAG	IRIS VERSICOLOR	#1	70	2ft. Stag. O/C
	Pv	BLUE SWITCHGRASS	Panicum virgatum 'Heavy Metal'	#1	100	4ft. Stag. O/C
	Ss	GOLDEROD	Solidago speciosa	#1	76	2ft. Stag. O/C

NOTES:
1. PLANT AT THE SPECIFIED SPACING STAGGERED OFF CENTER THROUGHOUT MICRO-BIORETENTION AREA.
2. A SEED PACKET MIX WITH EQUIVALENT QUANTITY OF HERBACEOUS PLANTS MAY BE USED INSTEAD OF PLUG/BARE ROOT.
3. SIZE COLUMN ABOVE INDICATES STANDARD LANDSCAPE TRADE CONTAINER SIZE.

GRAPHIC SCALE

10 0 5 10 20 40

(IN FEET)
1 inch = 10 ft.

OWNER/DEVELOPER:
JOHN R. OLIVER CO., INC.
C/O TAYLOR OLIVER
19733 LEITERSBURG PIKE
HAGERSTOWN, MD 21742
PHONE: 301-797-0000

SP-23-033

TRIAD ENGINEERING, INC.
1075-D SHERMAN AVENUE
HAGERSTOWN, MD 21740
PH: 301.797.6400 FAX: 301.797.2424
OFFICE LOCATIONS
MARYLAND ◇ PENNSYLVANIA ◇ VIRGINIA ◇ WEST VIRGINIA

REV. #	DATE	DESCRIPTION	BY
1	11-21-2023	PER WASH.CO. ENGINEERING REVIEW COMMENTS	BDB

CADD FILE: 03-22-0792-PH2-C-3-0
DRAWN BY: STAFF
CHECKED BY: BJS
DATE: 7-31-2023
SCALE: 1"=40'

I HEREBY CERTIFY THAT THESE DOCUMENTS WERE PREPARED OR APPROVED BY ME, AND THAT I AM A DULY LICENSED PROFESSIONAL ENGINEER UNDER THE LAWS OF THE STATE OF MARYLAND, LICENSE NO 34688 EXPIRATION DATE: 7-09-25

STATE OF MARYLAND · BRITTE JON SIMMONS · No. 34688 · PROFESSIONAL ENGINEER

12-04-2023

SITE PLAN
NORTH END STORAGE II - PHASE 2
SITUATED ON SOUTH SIDE LONGMEADOW ROAD, 0.25 MILES WEST OF ITS INTERSCTION WITH MARYLAND ROUTE 60, HAGERSTOWN, MARYLAND

SWM PLAN - BIORETENTION

ZONING: BL | WATERSHED CODE: 02140502 ANTIETAM CREEK | ELEC. DIST.: 18
TAX MAP: 0025 | GRID: 0020 | PARCEL: 0628

TRIAD ENGINEERING, INC.
www.triadeng.com

SHEET NUMBER:
C.7.0
JOB NO.: 03-22-0792

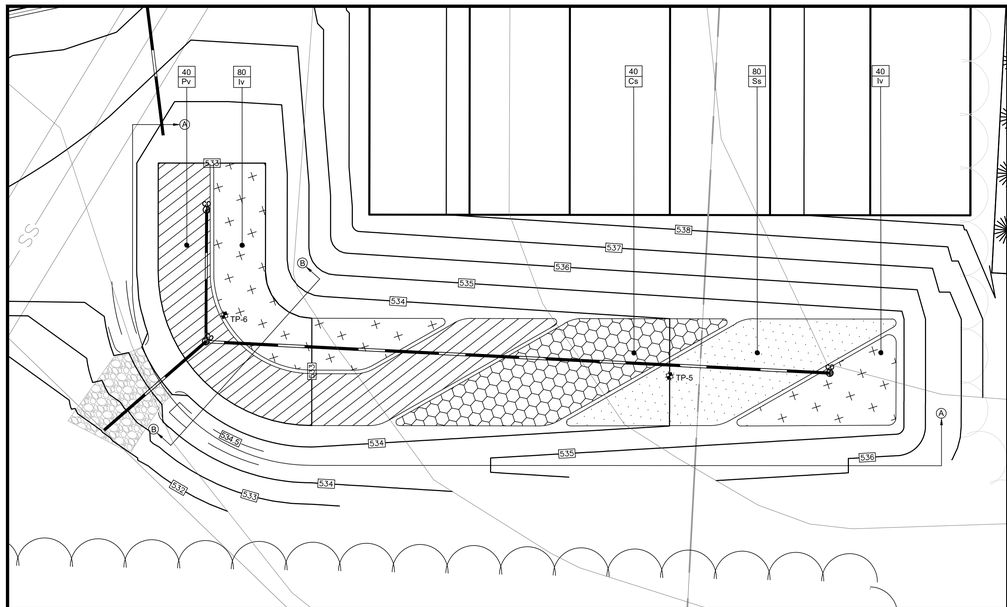

1 **MICRO-BIORETENTION AREA #1 DETAIL PLAN VIEW**
SCALE: 1" = 10'

NOTE:
CONTRACTOR MUST MINIMIZE COMPACTION WITHIN MICRO–BIORETENTION AREAS. WHEN POSSIBLE, USE EXCAVATION HOES TO REMOVE ORIGINAL SOIL AND TO PLACE REQUIRED MATERIAL TO CONSTRUCT MICRO–BIORETENTION AREAS.

MICRO-BIORETENTION SIZING CHART

	PROVIDED		AS-BUILT	
BMP NUMBER	ESD Vol. (cf.)	Af (sf.)	ESD Vol. (cf.)	Af (sf.)
MB-1	1,412	1,782		

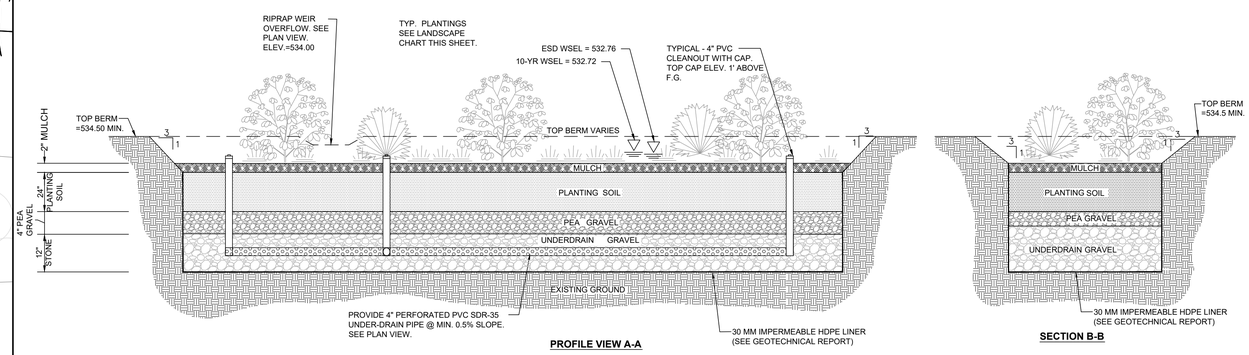

2 **MICRO-BIORETENTION AREA #1 - TYPICAL SECTION DETAIL**

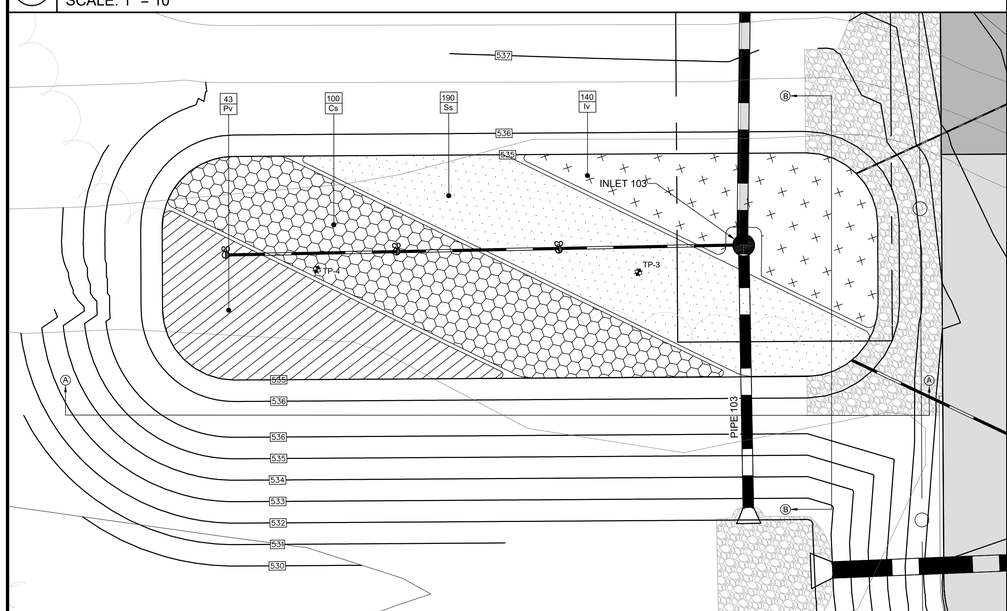

3 **BIORETENTION AREA #1 DETAIL PLAN VIEW**
SCALE: 1" = 10'

NOTE:
CONTRACTOR MUST MINIMIZE COMPACTION WITHIN BIORETENTION AREAS. WHEN POSSIBLE, USE EXCAVATION HOES TO REMOVE ORIGINAL SOIL AND TO PLACE REQUIRED MATERIAL TO CONSTRUCT BIORETENTION AREAS.

MICRO-BIORETENTION SIZING CHART

	PROVIDED		AS-BUILT	
BMP NUMBER	ESD Vol. (cf.)	Af (sf.)	ESD Vol. (cf.)	Af (sf.)
BIO-1	5,702	3,040		

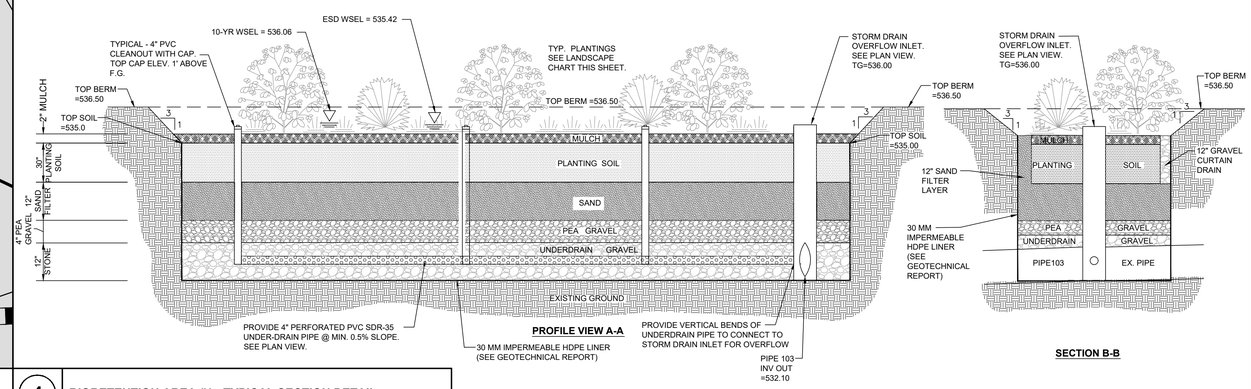

4 **BIORETENTION AREA #1 - TYPICAL SECTION DETAIL**

LANDSCAPE SCHEDULE
BMP M-6 MICRO BIORETENTION NO. MB-2

HERBACEOUS PLANTS	SYMBOL	COMMON NAME	BOTANICAL NAME	SIZE	QUANTITY	SPACING
	Cs	TUSSOCK SEDGE	CAREX STRICTA	#1	40	3ft Stag. O/C
	Iv	BLUE FLAG	IRIS VERSICOLOR	#1	120	2ft. Stag. O/C
	Pv	BLUE SWITCHGRASS	Panicum virgatum "Heavy Metal"	#1	40	4ft. Stag. O/C
	Ss	GOLDEROD	Solidago speciosa	#1	80	2ft. Stag. O/C

LANDSCAPE SCHEDULE
BMP M-6 MICRO BIORETENTION NO. MB-3

HERBACEOUS PLANTS	SYMBOL	COMMON NAME	BOTANICAL NAME	SIZE	QUANTITY	SPACING
	Cs	TUSSOCK SEDGE	CAREX STRICTA	#1	100	3ft Stag. O/C
	Iv	BLUE FLAG	IRIS VERSICOLOR	#1	70	2ft. Stag. O/C
	Pv	BLUE SWITCHGRASS	Panicum virgatum "Heavy Metal"	#1	43	4ft. Stag. O/C
	Ss	GOLDEROD	Solidago speciosa	#1	190	2ft. Stag. O/C

NOTES:
1. PLANT AT THE SPECIFIED SPACING STAGGERED OFF CENTER THROUGHOUT MICRO-BIORETENTION AREA.
2. A SEED PACKET MIX WITH EQUILVALENT QUANTITY OF HERBACEOUS PLANTS MAY BE USED INSTEAD OF PLUG/BARE ROOT.
3. SIZE COLUMN ABOVE INDICATES STANDARD LANDSCAPE TRADE CONTAINER SIZE.

GRAPHIC SCALE
10 0 5 10 20 40
(IN FEET)
1 inch = 10 ft.

OWNER/DEVELOPER:
JOHN R. OLIVER CO., INC.
C/O TAYLOR OLIVER
19733 LEITERSBURG PIKE
HAGERSTOWN, MD 21742
PHONE: 301-797-0000

SP-23-033

TRIAD ENGINEERING, INC.
1075-D SHERMAN AVENUE
HAGERSTOWN, MD 21740
PH: 301.797.6400 FAX: 301.797.2424
OFFICE LOCATIONS
MARYLAND ◇ PENNSYLVANIA ◇ VIRGINIA ◇ WEST VIRGINIA

REV. #	DATE	DESCRIPTION	BY
1	11-21-2023	PER WASH.CO. ENGINEERING REVIEW COMMENTS	BDB

CADD FILE: 03-22-0792-PH2-C-3-0
DRAWN BY: STAFF
CHECKED BY: BJS
SCALE: 1"=40'
DATE: 7-31-2023

I HEREBY CERTIFY THAT THESE DOCUMENTS WERE PREPARED OR APPROVED BY ME, AND THAT I AM A DULY LICENSED PROFESSIONAL ENGINEER UNDER THE LAWS OF THE STATE OF MARYLAND. LICENSE NO. 34688 EXPIRATION DATE: 7-09-25

STATE OF MARYLAND — BRIAN JON SMOLEN — No. 34688 — PROFESSIONAL ENGINEER
12-04-2023

SITE PLAN
NORTH END STORAGE II - PHASE 2
SITUATED ON SOUTH SIDE LONGMEADOW ROAD, 0.25 MILES WEST OF ITS INTERSCTION WITH MARYLAND ROUTE 60, HAGERSTOWN, MARYLAND
SWM PLAN - BIORETENTION

ZONING: BL | WATERSHED CODE: 02140502 ANTIETAM CREEK | ELEC. DIST.: 18
TAX MAP: 0025 | GRID: 0020 | PARCEL: 0628

TRIAD ENGINEERING, INC.
www.triadeng.com

SHEET NUMBER:
C.7.1
JOB NO.: 03-22-0792

B.4.C Specifications for Micro-Bioretention. Rain Gardens, Landscape Infiltration & Infiltration Berms

1. **Material Specifications**

The allowable materials to be used in these practices are detailed in Table B.4.1.

2. **Filtering Media or Planting Soil**

The soil shall be a uniform mix, free of stones, stumps, roots or other similar objects larger than two inches. No other materials or substances shall be mixed or dumped within the micro-bioretention practice that may be harmful to plant growth, or prove a hindrance to the planting or maintenance operations. The planting soil shall be free of Bermuda grass, Quackgrass, Johnson grass, or other noxious weeds as specified under COMAR 15.08.01.05.

The planting soil shall be tested and shall meet the following criteria:

Soil Component - Loamy Sand or Sandy Loam (USDA Soil Textural Classification)

Organic Content - Minimum 10% by dry weight (ASTM D 2974). In general, this can be met with a mixture of loamy sand (60%-65%) and compost (35% to 40%) or sandy loam (30%), coarse sand (30%), and compost (40%).

Clay Content - Media shall have a clay content of less than 5%.

pH Range - Should be between 5.5 - 7.0. Amendments (e.g., lime, iron sulfate plus sulfur) may be mixed into the soil to increase or decrease pH.

There shall be at least one soil test per project. Each test shall consist of both the standard soil test for pH, and additional tests of organic matter, and soluble salts. A textural analysis is required from the site stockpiled topsoil. If topsoil is imported, then a texture analysis shall be performed for each location where the topsoil was excavated.

3. **Compaction**

It is very important to minimize compaction of both the base of bioretention practices and the required backfill. When possible, use excavation hoes to remove original soil. If practices are excavated using a loader, the contractor should use wide track or marsh track equipment, or light equipment with turf type tires. Use of equipment with narrow tracks or narrow tires, rubber tires with large lugs, or high-pressure tires will cause excessive compaction resulting in reduced infiltration rates and is not acceptable. Compaction will significantly contribute to design failure. Compaction can be alleviated at the base of the bioretention facility by using a primary tilling operation such as a chisel plow, ripper, or subsoiler. These tilling operations are to refracture the soil profile through the 12 inch compaction zone. Substitute methods must be approved by the engineer. Rototillers typically do not till deep enough to reduce the effects of compaction from heavy equipment.

Rototill 2 to 3 inches of sand into the base of the bioretention facility before backfilling the optional sand layer. Pump any ponded water before preparing (rototilling) base.

When backfilling the topsoil over the sand layer, first place 3 to 4 inches of topsoil over the sand, then rototill the sand/topsoil to create a gradation zone. Backfill the remainder of the topsoil to final grade.

When backfilling the bioretention facility, place soil in lifts 12" to 18". Do not use heavy equipment within the bioretention basin. Heavy equipment can be used around the perimeter of the basin to supply soils and sand. Grade bioretention materials with light equipment such as a compact loader or a dozer/loader with marsh tracks.

4. **Plant Material**

Recommended plant material for micro-bioretention practices can be found in Appendix A, Section A.2.3.

5. **Plant Installation**

Compost is a better organic material source, is less likely to float, and should be placed in the invert and other low areas. Mulch should be placed in surrounding to a uniform thickness of 2" to 3". Shredded or chipped hardwood mulch is the only accepted mulch. Pine mulch and wood chips will float and move to the perimeter of the bioretention area during a storm event and are not acceptable. Shredded mulch must be well aged (6 to 12 months) for acceptance.

Rootstock of the plant material shall be kept moist during transport and on-site storage. The plant root ball should be planted so 1/8th of the ball is above final grade surface. The diameter of the planting pit shall be at least six inches larger than the diameter of the planting ball. Set and maintain the plant straight during the entire planting process. Thoroughly water ground bed cover after installation.

Trees shall be braced using 2" by 2" stakes only as necessary and for the first growing season only. Stakes are to be equally spaced on the outside of the tree ball.

Grasses and legume seed should be drilled into the soil to a depth of at least one inch. Grass and legume plugs shall be planted following the non-grass ground cover planting specifications.

The topsoil specifications provide enough organic material to adequately supply nutrients from natural cycling. The primary function of the bioretention structure is to improve water quality. Adding fertilizers defeats, or at a minimum, impedes this goal. Only add fertilizer if wood chips or mulch are used to amend the soil. Rototill urea fertilizer at a rate of 2 pounds per 1000 square feet.

6. **Underdrains**

Underdrains should meet the following criteria:

- Pipe- Should be 4" to 6" diameter, slotted or perforated rigid plastic pipe (ASTMF 758, Type PS 28, or AASHTO-M-278) in a gravel layer. The preferred material is slotted, 4" rigid pipe (e.g., PVC or HDPE).
- Perforations - If perforated pipe is used, perforations should be 3/8" diameter located 6" on center with a minimum of four holes per row. Pipe shall be wrapped with a 1/4" (No. 4 or 4x4) galvanized hardware cloth.
- Gravel - The gravel layer (No. 57 stone preferred) shall be at least 3" thick above and below the underdrain.
- The main collector pipe shall be at a minimum 0.5% slope.
- A rigid, non-perforated observation well must be provided (one per every 1,0000 square feet) to provide a clean-out port and monitor performance of the filter.
- A 4" layer of pea gravel (1/8" to 3/8" stone) shall be located between the filter media and underdrain to prevent migration of fines into the underdrain. This layer may be considered part of the filter bed when bed thickness exceeds 24".The main collector pipe for underdrain systems shall be constructed at a minimum slope of 0.5%. Observation wells and/or clean-out pipes must be provided (one minimum per every 1000 square feet of surface area).

7. **Miscellaneous**

These practices may not be constructed until all contributing drainage area has been stabilized.

APPENDIX B.4. CONSTRUCTION SPECIFICATIONS FOR ENVIRONMENTAL SITE DESIGN PRACTICES

TABLE B.4.1 MATERIALS SPECIFICATIONS FOR MICRO-BIORETENTION, RAIN GARDENS & LANDSCAPE INFILTRATION

Material	Specification	Size	Notes
Plantings	see Appendix A, Table A.4	n/a	plantings are site-specific
Planting soil [2' to 4' deep]	loamy sand (60 - 65%) & compost (35 - 40%) or sandy loam (30%), coarse sand (30%) & compost (40%)	n/a	USDA soil types loamy sand or sandy loam; clay content < 5%
Organic content	Min. 10% by dry weight (ASTM D 2974)		
Mulch	shredded hardwood		aged 6 months, minimum; no pine or wood chips
Pea gravel	pea gravel: ASTM-D-448	No. 8 or No. 9 (¼" to ⅜")	
* Curtain drain/gravel slopes/diaphragm	AASHTO M-43	No. 57 or No. 6 aggregate (¾" to ⅜")	
Geotextile		n/a	PE Type 1 nonwoven
Gravel (underdrains and infiltration berms)	AASHTO M-43	No. 57 or No. 6 aggregate (¾" to ⅜")	
Underdrain piping	F 758, Type PS 28 or AASHTO M-278	4" to 6" rigid schedule 40 PVC or SDR 35	Slotted or perforated pipe ⅜" perf. @ 6" on center, 4 holes per row; minimum of 3" of gravel over pipes; not necessary underneath pipes. Perforated pipe shall be wrapped with ¼-inch galvanized hardware cloth
Poured in place concrete (if required)	MSHA Mix No. 3; f'c = 3500 psi @ 28 days, normal weight, air-entrained; reinforcing to meet ASTM-61 5-60	n/a	on-site testing of poured-in-place concrete required: 28 day strength and slump test; all concrete design (cast-in-place or pre-cast) *not using previously approved State or local standards* requires design drawings sealed by a professional and approved by a professional structural engineer licensed in the State of Maryland - design to include meeting ACI Code 350.R/89; vertical loading [H-10 or H-20]; allowable horizontal loading (based on soil pressures); and analysis of potential cracking
Sand	AASHTO-M-6 or ASTM-C-33	0.02" to 0.04"	Sand substitutions such as Diabase and Graystone (AASHTO #10) are not acceptable. No calcium carbonated or dolomitic sand substitutions are acceptable. No "rock dust" can be used for sand.

* Revised per Washington County Land Development Engineering

BIORETENTION MAINTENANCE SCHEDULE

INSPECTION ITEM	FREQUENCY
SOIL	
Inspect and Repair Erosion Damage	Once a Month
Inspect and Repair Rodent/Pest Damage	Once a Month
Repair, Reseed and Remulch Disturbed Areas	As Required
STRUCTURE	
Inspect Outlet Pipe and Riser Structure/Weir Wall	Twice Yearly
PLANTINGS	
Water Grass	Once a Day for the First 14 Days
Remove Invasive Plants/Weeds/Trees	As Needed
Mow Berm and Impound Area	Minimum Once a Month During Season

NOTICE OF REQUIRED STORMWATER MANAGEMENT INSPECTIONS
SAND FILTERS, BIORETENTION AND RAIN GARDEN FACILITIES (FOR ALL BIORETENTION AREAS AND MICRO-BIORETENTION AREAS)

The following inspections are required to be performed by the Qualified Professional for the construction of any Sand Filter, Bioretention or Rain Garden Facility. Additional inspections may be needed based on professional engineering judgment. Each inspection is required at the start of each stage.

EXCAVATION OF FACILITY - Prior to excavation, verify sediment and erosion control features are in place to prevent sediment inflow. Verify all flagging required in the area of sensitive area protection. Verify grading is accurately staked-out and re-staked as needed. Facility dimensions shall be verified and soils checked for infiltration. Verify contributing area is permanently stabilized. Verify that water is not present. Ensure roughening of side walls if sheared and sealed by heavy equipment. Verify that compaction of facility base is minimized.			
PLACEMENT OF FILTER CLOTH (Trenches)- Ensure filter fabric is overlapping six (6) inches between strips of cloth. Ensure tree roots or other obstacles are removed from facility walls or sides and base to prevent tearing. Verify that uphill fabric roll overlaps two (2) feet over downhill roll.			
PLACEMENT OF UNDERDRAINS AND OBSERVATION WELLS - Location size, and material of under drain and observation wells shall be verified prior to stone placement. Verify pipe ends capped. Verify 3" gravel cover.			
PLACEMENT OF FILTERING MEDIA - Verify bottom layer material and thickness. Verify sand and/or filter media layer material and thickness. Verify filter fabric or pea gravel used between sand layers. Verify top filter media layer.			
PLACEMENT OF SAND FILTER LAYER OR GRAVEL DIAPHRAGM - Verify depth and width of sand and/or diaphragm layer. Verify fill material.			
STABILIZATION AND LANDSCAPING - Verify site top soiled, seeded and mulched. Verify embankment top soiled and seeded. Verify location, size, type and number of planted landscape material. Verify no more than 1/8 inch root bal exposed. Verify planting stock kept moist during on-site storage. Verify installation location, size, material type of fencing or other safety barriers			

The Qualified Professional may request the presence of a County Construction Standards Inspector at least 24 hours in advance.

OPERATION AND MAINTENANCE PLAN - BIORETENTION

INSPECTION ITEM	INSPECTION REQUIREMENTS	REMEDIAL ACTION
Maintenance Access		
General	Check for accessibility to facility; excessive vegetation; surface stability	Repair erosion and maintain access surface in good condition
Pretreatment		
Grass filter strip or sand layer	Check for sediment accumulation	Remove sediment as needed
Optional sand layer	Check sand for staining and sediment accumulation	If contaminated, replace first three inches of sand layer
Gravel diaphragm	Check for sediment accumulation and evidence of erosion	Remove sediment and replace gravel as needed
Mulch layer	Check for a (2-3) inch mulch layer	Remove mulch and replace as needed
Filter Bed		
Dewatering	Check for dewatering within 48 hours of rainfall; noticeable odors; water stains on the filter surface or at the outlet; presence of algae or aquatic vegetation	Remove mulch and the top (3-6) inches of soil/sediment and replace with suitable materials per plan specifications; follow up inspections shall confirm adequate dewatering; contact the plan approval authority if the facility does not function as intended
Sediment	Check for sediment accumulation	Remove sediment as needed
Mulch layer	Check for adequate cover; sediment accumulation; discoloration	Remove and replace mulch and excess sediment as needed
Vegetation		
Plant composition and health	Check for plant composition according to approved plans; invasive species, weeds and dead or dying vegetation	Remove and replace plants as necessary
Vegetative cover/erosion	Check for erosion, runoff channelizing or bare spots	Repair/grade and stabilize as needed
Outlets		
Underdrain system	Check outlet end to ensure that discharge is not obstructed; check for erosion	Remove any flow obstructions; grade and stablize any eroded areas to provide stable conveyance
Overflow spillway	Check for displacement of rip-rap, stable conveyance and erosion below the outlet	Repair and replace as needed
Conveyance Systems		
General	Check for erosion, flow blockages or bypass and stable conveyance	Repair/replace and stabilize as needed
Flow diversion	Check flow splitter for proper functioning	Repair as necessary
Trash and Debris		
	Check for trash and debris accumulation	Trash and debris shall be disposed of in an acceptable manner
Structural Components		
	Check for structural deterioration, spalling or cracking	Repair according to specifications on the approved plans

Field conditions may require a modification to the original approval in order to achieve the intended design function. The plan approval authority should be contacted for review and approval of all proposed modifications. Inspection and maintenance should occur after any major rain event (e.g., meeting or exceeding the design rainfall depth for the facility).

1 **BIORETENTION, RAIN GARDEN AND INFILITRATION NOTES, MAINTENANCE AND INSPECTIONS**
NOT TO SCALE

Permeable Pavement Construction

- Contractor must have a minimum of 3 projects where pervious asphalt pavement was successfully installed. Project examples should be provided to design team and owner for review prior to selection of the contractor. Site visits may be performed by the design team and owner prior to approving contractor.
- Porous asphalt supplier must have a minimum of 3 years' experience batching pervious asphalt pavement. Supplier must provide examples of projects where pervious pavement was batched.
- The permeable asphalt mix design should be in strict accordance with industry standard and MDSHA specifications and should be approved by Design Team prior to placement.
- Permeable parking lot soil subgrade shall be adequately sloped to an underdrain. All final soil subgrades should be avoided with construction traffic and compaction equipment after excavations and prior to aggregate placement. If adverse weather conditions, construction traffic and compaction occur any unsuitable or densified subgrade should be over excavated prior to placement of sub-base aggregate materials. Triad should be on-site for final subgrade approval and to provide recommendations for any over-excavations required.
- Sub-base aggregate shall be placed in full depth thicknesses and compacted with a minimum of one pass of a lightweight vibratory smooth drum roller.
- The asphalt shall be placed in lift thicknesses determined by the asphalt contractor and supplier to achieve appropriate compaction and finish aesthetics suitable to the owner. Compaction of the pervious asphalt should not exceed 85 percent compaction based on the in place void content. Lower densities are acceptable if mix design is appropriate.
- Triad should be on site full time to monitor and provide recommendations during grading and construction for permeable pavement subgrade and asphalt placement.
- During all site construction and until final site stabilization, methods must be implemented by the contractor to ensure that pavement section materials are not clogged with fines, mud or other possible sediment from sources such as storm water runoff or construction equipment.
- After final paving, traffic should be prohibited on permeable pavements for 24 hours.
- After construction is completed, the parking area must be maintained and cleaned in order to ensure that the permeability of the permeable asphalt is retained during the design life.
- All asphalt placement should be in strict accordance with MDSHA requirements.

Maintenance Criteria of Permeable Pavement

The following procedures should be considered essential for maintaining permeable pavement systems:

- Pavements should be used only where regular maintenance can be performed. Maintenance agreements should clearly specify how to conduct routine tasks to ensure long-term performance.
- Pavement surfaces should be swept and vacuumed to reduce sediment accumulation and ensure continued surface porosity. Sweeping should be performed at least twice annually with a commercial cleaning unit. Washing systems and compressed air units should not be used to perform surface cleaning.
- Drainage pipes, inlets, stone edge drains, and other structures within or draining to the subbase should be cleaned out at regular intervals.
- Trucks and other heavy vehicles can grind dirt into the porous surfaces, leading to clogging and premature failure. These vehicles should be prevented from tracking and spilling material onto the pavement.
- Deicers should be used in moderation. When used, deicers should be non-toxic and organic and can be applied either as blended magnesium chloride-based liquid products, or as pretreated salt. Snow plowing should be done carefully with blades set one-inch higher than normal. Plowed snow piles and snowmelt should not be directed to permeable pavement.

NOTICE OF REQUIRED STORMWATER MANAGEMENT INSPECTIONS
PERMEABLE PAVEMENT FACILITIES

The following inspections are required to be performed by the Qualified Professional for the construction of any Permeable Pavement Facility. Additional inspections may be needed based on professional engineering judgment. Each inspection is required at the start of each stage.

EXCAVATION OF FACILITY - Prior to excavation, verify sediment and erosion control features are in place to prevent sediment inflow. Verify all flagging required in the area of sensitive area protection. Verify grading is accurately staked-out and re-staked as needed. Facility dimensions shall be verified and soils checked for infiltration. Verify contributing area is permanently stabilized. Verify that water is not present. Ensure roughening of side walls if sheared and sealed by heavy equipment. Verify that compaction of facility base is minimized.			
PLACEMENT AND BACKFILL OF DRAINAGE OR DISTRIBUTION SYSTEMS - Location, size and material of under drains, over drains or distribution systems shall be verified prior to stone placement. Verify pipe ends capped. Verify 3" gravel cover.			
PLACEMENT OF SUBBASE MATERIAL - Verify subbase layer material and thickness. Verify open graded base layer material and thickness.			
PLACEMENT OF SURFACE MATERIAL - Verify surface layer material and thickness.			
FINAL GRADING AND STABILIZATION - Verify facility and surround is final graded, top soiled, seeded and mulched.			

The Qualified Professional may request the presence of a County Construction Standards Inspector at least 24 hours in advance by calling 240-313-2400.

2 **PERMEABLE PAVEMENT NOTES, MAINTENANCE AND INSPECTIONS**
NOT TO SCALE

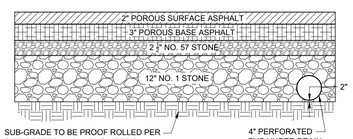

NOTES:

1. SEE PERMEABLE PAVEMENT NOTES THIS SHEET.
2. THE POROUS ASPHALT MIX SHALL BE PRE-BLENDED PG 76-22 MODIFIED WITH SBS AND 5 POUNDS OF FIBERS PER TON OF ASPHALT MIX, MINIMUM OF 5.75 PERCENT BINDER BY WEIGHT OF TOTAL MIX. MINIMUM AIR VOIDS OF 16%. DRAINDOWN TEST OF 0.3% MAXIMUM. THE SBS WILL BE SUPPLIED BY AN APPROVED PGAB SUPPLIER HOLDING A QUALITY CONTROL PLAN APPROVED BY MDOT. A BILL OF LADING WILL BE DELIVERED WITH EACH TRANSPORT OF PG 76-22 SBS. A COPY OF THE BILL OF LADING WILL BE FURNISHED TO THE QA INSPECTOR AT THE PLANT.

3 **PERMEABLE PAVING - PARKING LOT**
NOT TO SCALE

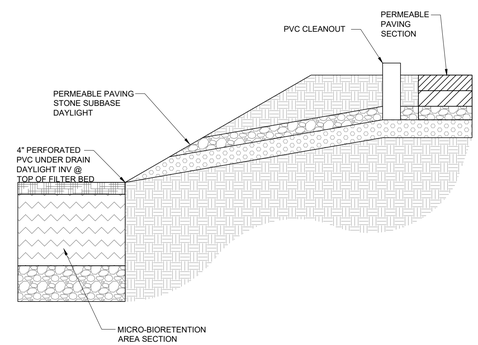

4 **PERMEABLE PAVING SUBBASE EXTENSION TO BIORETENTION AREA**
NOT TO SCALE

OWNER/DEVELOPER:
JOHN R. OLIVER CO., INC.
C/O TAYLOR OLIVER
19733 LEITERSBURG PIKE
HAGERSTOWN, MD 21742
PHONE: 301-797-0000

SP-23-033

TRIAD ENGINEERING, INC.
1075-D SHERMAN AVENUE
HAGERSTOWN, MD 21740
PH: 301.797.6400 FAX: 301.797.2424
OFFICE LOCATIONS
MARYLAND ◇ PENNSYLVANIA ◇ VIRGINIA ◇ WEST VIRGINIA

REV. #	DATE	DESCRIPTION	BY
1	11-21-2023	PER WASH.CO. ENGINEERING REVIEW COMMENTS	BDB

CADD FILE: 03-22-0792-PH2-C-3-0
DRAWN BY: STAFF
CHECKED BY: BJS
DATE: 7-31-2023
SCALE: 1"=40'

I HEREBY CERTIFY THAT THESE DOCUMENTS WERE PREPARED OR APPROVED BY ME, AND THAT I AM A DULY LICENSED PROFESSIONAL ENGINEER UNDER THE LAWS OF THE STATE OF MARYLAND, LICENSE NO. 34688 EXPIRATION DATE: 7-05-25

12-04-2023

SITE PLAN
NORTH END STORAGE II - PHASE 2
SITUATED ON SOUTH SIDE LONGMEADOW ROAD, 0.25 MILES WEST OF ITS INTERSECTION WITH MARYLAND ROUTE 60, HAGERSTOWN, MARYLAND

SWM NOTES AND DETAILS

ZONING: BL | WATERSHED CODE: 02140502 ANTIETAM CREEK
TAX MAP: 0025 | GRID: 0020 | PARCEL: 0620pc 0113 | ELEC. DIST.: 18

TRIAD ENGINEERING, INC.
www.triadeng.com

SHEET NUMBER:
C.7.2
JOB NO.: 03-22-0792

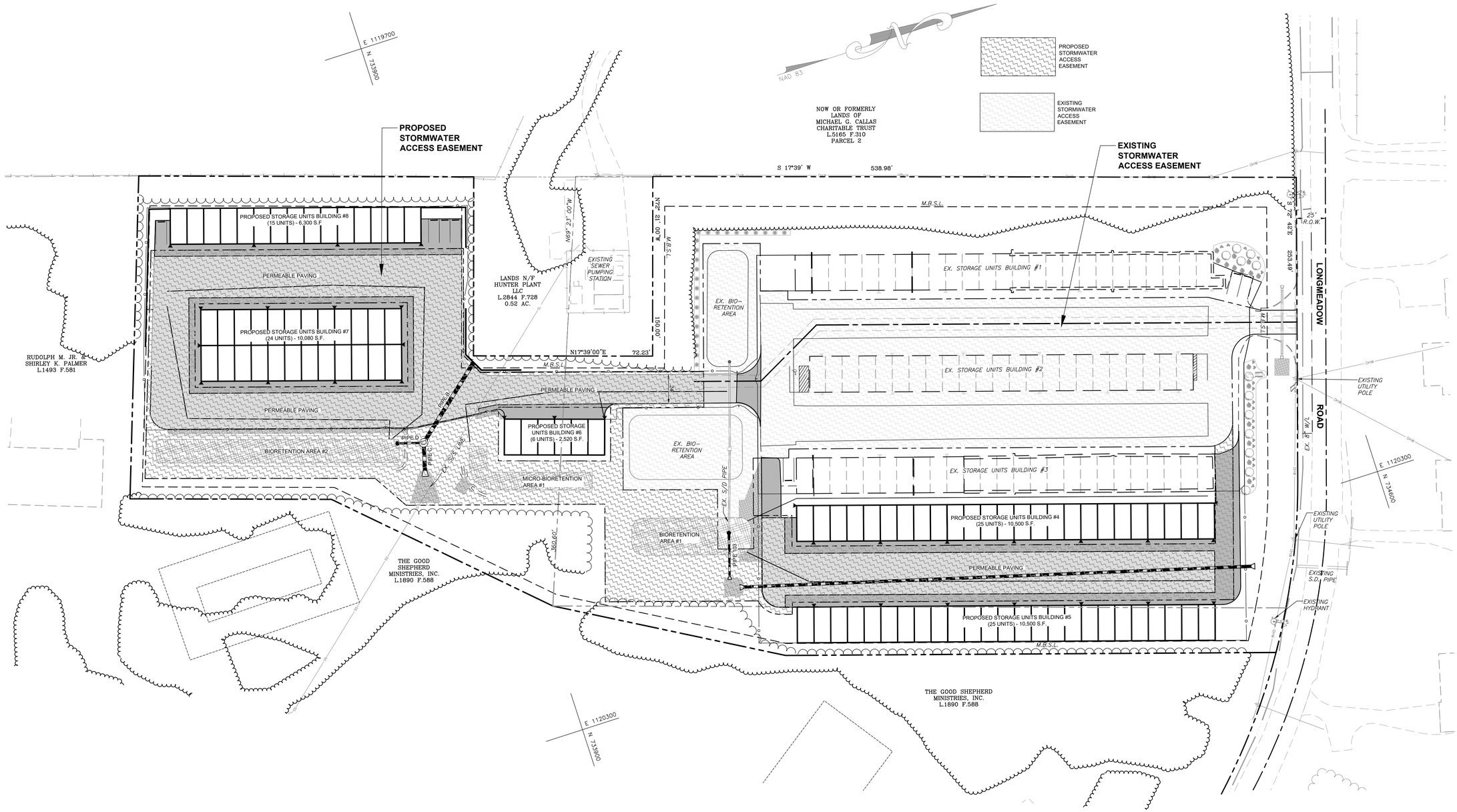

GRAPHIC SCALE

40 0 20 40 80 160

(IN FEET)
1 inch = 40 ft.

OWNER/DEVELOPER:
JOHN R. OLIVER CO., INC.
C/O TAYLOR OLIVER
19733 LEITERSBURG PIKE
HAGERSTOWN, MD 21742
PHONE: 301-797-0000

SP-23-033

TRIAD ENGINEERING, INC.
1075-D SHERMAN AVENUE
HAGERSTOWN, MD 21740
PH: 301.797.6400 FAX: 301.797.2424
OFFICE LOCATIONS
MARYLAND ◇ PENNSYLVANIA ◇ VIRGINIA ◇ WEST VIRGINIA

REV. #	DATE	DESCRIPTION	BY
			BDB
			BDB

CADD FILE: 03-22-0792-PH2-C-3-0
DRAWN BY: STAFF
CHECKED BY: BJS
DATE: 7-31-2023
SCALE: 1"=40'

I HEREBY CERTIFY THAT THESE DOCUMENTS WERE PREPARED OR APPROVED BY ME, AND THAT I AM A DULY LICENSED PROFESSIONAL ENGINEER UNDER THE LAWS OF THE STATE OF MARYLAND, LICENSE NO. 34688 EXPIRATION DATE: 7-09-25

12-04-2023

SITE PLAN
NORTH END STORAGE II - PHASE 2
SITUATED ON SOUTH SIDE LONGMEADOW ROAD, 0.25 MILES WEST OF ITS INTERSECTION WITH MARYLAND ROUTE 60, HAGERSTOWN, MARYLAND

SWM ACCESS EASEMENT

ZONING: BL | WATERSHED CODE: 02140502 ANTIETAM CREEK | ELEC. DIST.: 18
TAX MAP: 0025 | GRID: 0020 | PARCEL: 0628

TRIAD ENGINEERING, INC.
www.triadeng.com

SHEET NUMBER:
C.7.3
JOB NO.: 03-22-0792

TEST PIT LOG — TP-1

Sheet 1 of 1

Project Number: 03-22-0792 | Project Name: Longmeadow Jumbo Storage | Test Pit No.: **TP- 1**
Inspector: TK | Test Pit Location: See Figure A-2
Date Started: 8/10/23 | Method: Mid-Sized Excavator
Date Completed: 8/10/23 | Operator: Triad Engineering, Inc. | Ground Elev.: 538

Columns: Depth (feet), Pocket Penetrometer (tsf), Sample Type, Penetration Blows/ 3/4 inch, Recovery (%), RQD (RUN), Strata Depth (ft), MATERIAL DESCRIPTION, RQD (Strata), Water Level, Graphic Log, Strata Elevation. Legend: Shelby Tube, Standard Split Spoon, Core Sample, Auger Probe

Strata Depth (ft)	MATERIAL DESCRIPTION	Strata Elevation
	8.0" TOPSOIL little roots	
0.7	Tan **SILT**, non plastic, trace roots, dry	537.3
2.0	- RESIDUUM - TEST PIT TERMINATED AT 2.0 FEET	536.0

Depth (feet): 5.0

Remarks: Test pit dry during and upon completion of excavation

TRIAD C TEST PIT 03-22-0792 TEST PITS.GPJ 03-12-0039 YALE DRIVE EXTENSION TEST PITS.GPJ 8/25/23

TRIAD ENGINEERING, INC.

TEST PIT LOG — TP-2

Sheet 1 of 1

Project Number: 03-22-0792 | Project Name: Longmeadow Jumbo Storage | Test Pit No.: **TP- 2**
Inspector: TK | Test Pit Location: See Figure A-2
Date Started: 8/10/23 | Method: Mid-Sized Excavator
Date Completed: 8/10/23 | Operator: Triad Engineering, Inc. | Ground Elev.: 534

Strata Depth (ft)	MATERIAL DESCRIPTION	Strata Elevation
	8.0" TOPSOIL little roots	
0.7	Tan **SILT**, non plastic, trace roots, dry	533.3
2.0	- RESIDUUM - TEST PIT TERMINATED AT 2.0 FEET	532.0

Depth (feet): 5.0

Remarks: Test pit dry during and upon completion of excavation

TRIAD ENGINEERING, INC.

TEST PIT LOG — TP-3

Sheet 1 of 1

Project Number: 03-22-0792 | Project Name: Longmeadow Jumbo Storage | Test Pit No.: **TP- 3**
Inspector: TK | Test Pit Location: See Figure A-2
Date Started: 8/10/23 | Method: Mid-Sized Excavator
Date Completed: 8/10/23 | Operator: Triad Engineering, Inc. | Ground Elev.: 532.9

Strata Depth (ft)	MATERIAL DESCRIPTION	Strata Elevation
	8.0" TOPSOIL little roots	
0.7	Tan **SILT**, non plastic, trace gravel, trace roots, dry	532.2
2.5	- RESIDUUM - Tan orange **CLAY**, medium plasticity, trace sand, trace gravel, moist	530.4
5.3	- RESIDUUM - TEST PIT TERMINATED AT 5.3 FEET	527.6

Depth (feet): 5.0

Remarks: Test pit dry during and upon completion of excavation. Rock in southeastern end of test pit at 4.33'.

TRIAD ENGINEERING, INC.

TEST PIT LOG — TP-4

Sheet 1 of 1

Project Number: 03-22-0792 | Project Name: Longmeadow Jumbo Storage | Test Pit No.: **TP- 4**
Inspector: TK | Test Pit Location: See Figure A-2
Date Started: 8/10/23 | Method: Mid-Sized Excavator
Date Completed: 8/10/23 | Operator: Triad Engineering, Inc. | Ground Elev.: 532.9

Strata Depth (ft)	MATERIAL DESCRIPTION	Strata Elevation
	8.0" TOPSOIL	
0.7	Tan **SILT**, non plastic, trace roots, trace gravel, dry	532.2
3.3	- RESIDUUM - BUCKET REFUSAL AT 3.3 FEET	529.7

Depth (feet): 5.0

Remarks: Test pit dry during and upon completion of excavation. Bucket refusal at 3.25', offset 5' Southwest. Rock in northwestern end of offset test pit at 1.83'. Bucket refusal at 2.33'.

TRIAD ENGINEERING, INC.

TEST PIT LOG — TP-5

Sheet 1 of 1

Project Number: 03-22-0792 | Project Name: Longmeadow Jumbo Storage | Test Pit No.: **TP- 5**
Inspector: TK | Test Pit Location: See Figure A-2
Date Started: 8/10/23 | Method: Mid-Sized Excavator
Date Completed: 8/10/23 | Operator: Triad Engineering, Inc. | Ground Elev.: 536.6

Strata Depth (ft)	MATERIAL DESCRIPTION	Strata Elevation
	4.0" TOPSOIL	
0.3	Tan orange **CLAY**, high plasticity, little sand, trace cobbles, trace boulders, moist, boulders up to 1.5' in largest dimension	536.3
2.7	- RESIDUUM - BUCKET REFUSAL AT 2.7 FEET	533.9

Depth (feet): 5.0

Remarks: Test pit dry during and upon completion of excavation. Surface rock all around test pit location within 5'. Rock in southwestern end of test pit at 0.5'. Rock in northeastern end of test pit at 2'. Multiple rock outcrops in woods running north-to-south.

TRIAD ENGINEERING, INC.

TEST PIT LOG — TP-6

Sheet 1 of 1

Project Number: 03-22-0792 | Project Name: Longmeadow Jumbo Storage | Test Pit No.: **TP- 6**
Inspector: TK | Test Pit Location: See Figure A-2
Date Started: 8/10/23 | Method: Mid-Sized Excavator
Date Completed: 8/10/23 | Operator: Triad Engineering, Inc. | Ground Elev.: 533.1

Strata Depth (ft)	MATERIAL DESCRIPTION	Strata Elevation
	4.0" TOPSOIL little roots	
0.3	Tan orange **CLAY**, medium plasticity, trace roots, trace sand, moist	532.8
2.0	- RESIDUUM - BUCKET REFUSAL AT 2.0 FEET	531.1

Depth (feet): 5.0

Remarks: Test pit dry during and upon completion of excavation. Surface rock all around test pit location within 5'. Bucket refusal at 2', offset 10' Southwest. Bucket refusal at 1.5'.

TRIAD ENGINEERING, INC.

TEST PIT LOG — TP-7

Sheet 1 of 1

Project Number: 03-22-0792 | Project Name: Longmeadow Jumbo Storage | Test Pit No.: **TP- 7**
Inspector: TK | Test Pit Location: See Figure A-2
Date Started: 8/10/23 | Method: Mid-Sized Excavator
Date Completed: 8/10/23 | Operator: Triad Engineering, Inc. | Ground Elev.: 532

Strata Depth (ft)	MATERIAL DESCRIPTION	Strata Elevation
	8.0" TOPSOIL	
0.7	Tan orange **CLAY**, low plasticity, trace gravel, trace sand, moist	531.3
2.2	- RESIDUUM - BUCKET REFUSAL AT 2.2 FEET	529.8

Depth (feet): 5.0

Remarks: Test pit dry during and upon completion of excavation. Surface rock within 10' of test pit location. Bucket refusal at 1.83', offset 10' West.

TRIAD ENGINEERING, INC.

TEST PIT LOG — TP-8

Sheet 1 of 1

Project Number: 03-22-0792 | Project Name: Longmeadow Jumbo Storage | Test Pit No.: **TP- 8**
Inspector: TK | Test Pit Location: See Figure A-2
Date Started: 8/10/23 | Method: Mid-Sized Excavator
Date Completed: 8/10/23 | Operator: Triad Engineering, Inc. | Ground Elev.: 537.33

Strata Depth (ft)	MATERIAL DESCRIPTION	Strata Elevation
	12.0" TOPSOIL little cobbles, trace gravel, trace roots, trace boulders up to 1' in largest dimension	
1.0	Tan brown **SILT**, non plastic, little gravel, little cobbles, trace boulders, dry, boulders up to 2' in largest dimension	536.3
1.5	- RESIDUUM - BUCKET REFUSAL AT 1.5 FEET	535.8

Depth (feet): 5.0

Remarks: Test pit dry during and upon completion of excavation. Rock outcrop 5' northwest of test pit location. Bucket refusal at surface, offset 5' northeast. Bucket refusal at 0.75', offset 10' Southwest. Bucket refusal at 1.5'.

TRIAD ENGINEERING, INC.

TEST PIT LOG — TP-9

Sheet 1 of 1

Project Number: 03-22-0792 | Project Name: Longmeadow Jumbo Storage | Test Pit No.: **TP- 9**
Inspector: TK | Test Pit Location: See Figure A-2
Date Started: 8/10/23 | Method: Mid-Sized Excavator
Date Completed: 8/10/23 | Operator: Triad Engineering, Inc. | Ground Elev.: 536.15

Strata Depth (ft)	MATERIAL DESCRIPTION	Strata Elevation
	8.0" TOPSOIL little roots	
0.7	Tan orange **CLAY**, low plasticity, trace sand, trace gravel, moist	535.5
	- - no gravel	
3.8	- RESIDUUM - TEST PIT TERMINATED AT 3.8 FEET	532.4

Depth (feet): 5.0

Remarks: Test pit dry during and upon completion of excavation. Bucket refusal at 2', offset 5' East

TRIAD ENGINEERING, INC.

TEST PIT LOG — TP-10

Sheet 1 of 1

Project Number: 03-22-0792 | Project Name: Longmeadow Jumbo Storage | Test Pit No.: **TP-10**
Inspector: TK | Test Pit Location: See Figure A-2
Date Started: 8/10/23 | Method: Mid-Sized Excavator
Date Completed: 8/10/23 | Operator: Triad Engineering, Inc. | Ground Elev.: 539.75

Strata Depth (ft)	MATERIAL DESCRIPTION	Strata Elevation
	9.0" TOPSOIL	
0.8	Tan orange **CLAY**, medium plasticity, trace sand, trace gravel, moist	539.0
1.3	- RESIDUUM - BUCKET REFUSAL AT 1.3 FEET	538.4

Depth (feet): 5.0

Remarks: Test pit dry during and upon completion of excavation. Surface rock and large surface boulders within 5' to 20' of test pit location. Bucket refusal at 0.75', offset 5' South.

TRIAD ENGINEERING, INC.

NOTE: BORING LOCATIONS ARE SHOWN SHEET C.6.0.

OWNER/DEVELOPER:
JOHN R. OLIVER CO., INC.
C/O TAYLOR OLIVER
19733 LEITERSBURG PIKE
HAGERSTOWN, MD 21742
PHONE: 301-797-0000

SP-23-033

TRIAD ENGINEERING, INC.
1075-D SHERMAN AVENUE
HAGERSTOWN, MD 21740
PH: 301.797.6400 FAX: 301.797.2424
OFFICE LOCATIONS
MARYLAND ○ PENNSYLVANIA ○ VIRGINIA ○ WEST VIRGINIA

REV. #	DATE	DESCRIPTION	BY
1	11-21-2023	PER WASH CO. ENGINEERING REVIEW COMMENTS	BDB
			BDB

CADD FILE: 03-22-0792-PH2-C-3-0
DRAWN BY: STAFF | CHECKED BY: BJS
DATE: 7-31-2023 | SCALE: 1"=40'

I HEREBY CERTIFY THAT THESE DOCUMENTS WERE PREPARED OR APPROVED BY ME, AND THAT I AM A DULY LICENSED PROFESSIONAL ENGINEER UNDER THE LAWS OF THE STATE OF MARYLAND, LICENSE NO. 34688 EXPIRATION DATE: 7-09-25

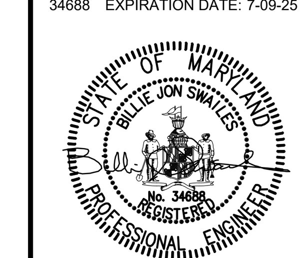

12-04-2023

SITE PLAN
NORTH END STORAGE II - PHASE 2
SITUATED ON SOUTH SIDE LONGMEADOW ROAD, 0.25 MILES WEST OF ITS INTERSCTION WITH MARYLAND ROUTE 60, HAGERSTOWN, MARYLAND

SOIL BORING LOGS

ZONING: BL | WATERSHED CODE: 02140502 ANTIETAM CREEK
TAX MAP: 0025 | GRID: 0020 | PARCEL: 0628/po 0113 | ELEC. DIST.: 18

TRIAD ENGINEERING, INC.
www.triadeng.com

SHEET NUMBER:
C.7.4
JOB NO.: 03-22-0792

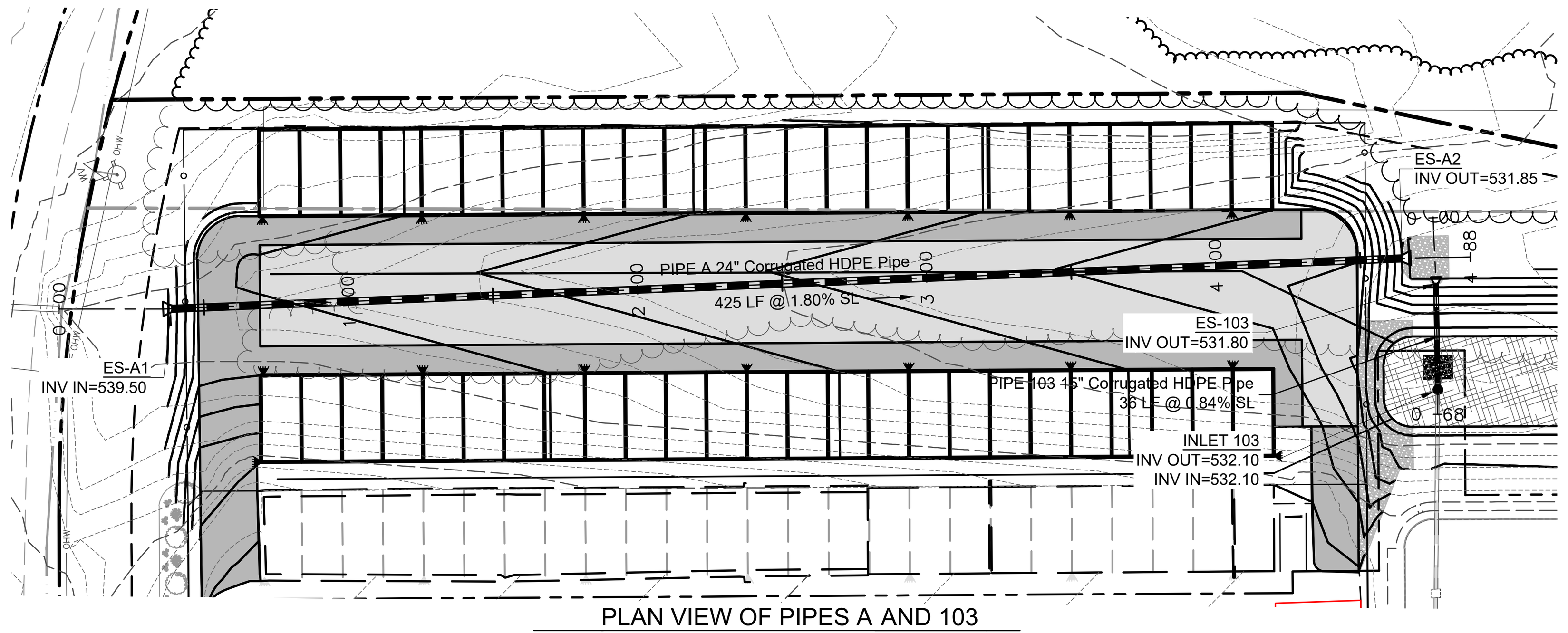

PLAN VIEW OF PIPES A AND 103
SCALE 1" = 50'

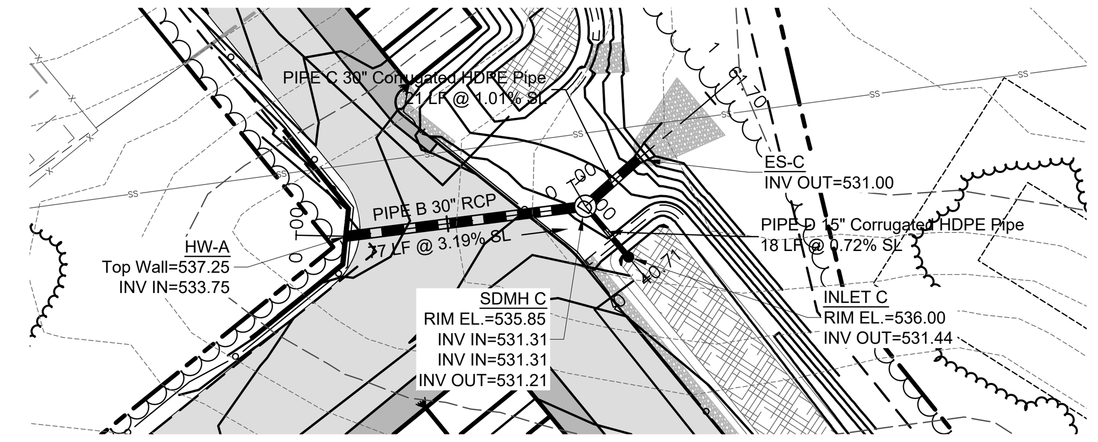

PLAN VIEW OF PIPES B AND C
SCALE 1" = 50'

PIPE TABLE					
NAME	SIZE	LENGTH	SLOPE	INV. IN	INV. OUT
PIPE 103	15" Corrugated HDPE Pipe	36.69'	0.84%	532.10	531.80
PIPE A	24" Corrugated HDPE Pipe	425.41'	1.80%	539.50	531.85
PIPE B	30" Concrete Pipe	79.34'	3.19%	533.75	531.31
PIPE C	30" Corrugated HDPE Pipe	23.11'	1.01%	531.21	531.00
PIPE D	15" Corrugated HDPE Pipe	21.91'	0.72%	531.44	531.31

STRUCTURE TABLE				
STRUCTURE NAME	DETAILS	RIM	INV IN	INV OUT
ES-C	CMP Rectangular End Section	533.80	PIPE C=531.00	
ES-103	CMP Rectangular End Section	533.24	PIPE 103=531.80	
ES-A2	CMP Rectangular End Section	534.09	PIPE A=531.85	
INLET 103	30" Nyloplast Inlet	536.00	PIPE 102=532.10	PIPE 103=532.10
ES-A1	CMP Rectangular End Section	541.74		PIPE A=539.50
HW-A	Concrete Rectangular Headwall	537.25		PIPE B=533.75
SDMH C	60" PRECAST FLATTOP MANHOLE	535.85	PIPE D=531.31 PIPE B=531.31	PIPE C=531.21
INLET C	30" Nyloplast Inlet	536.00		PIPE D=531.44

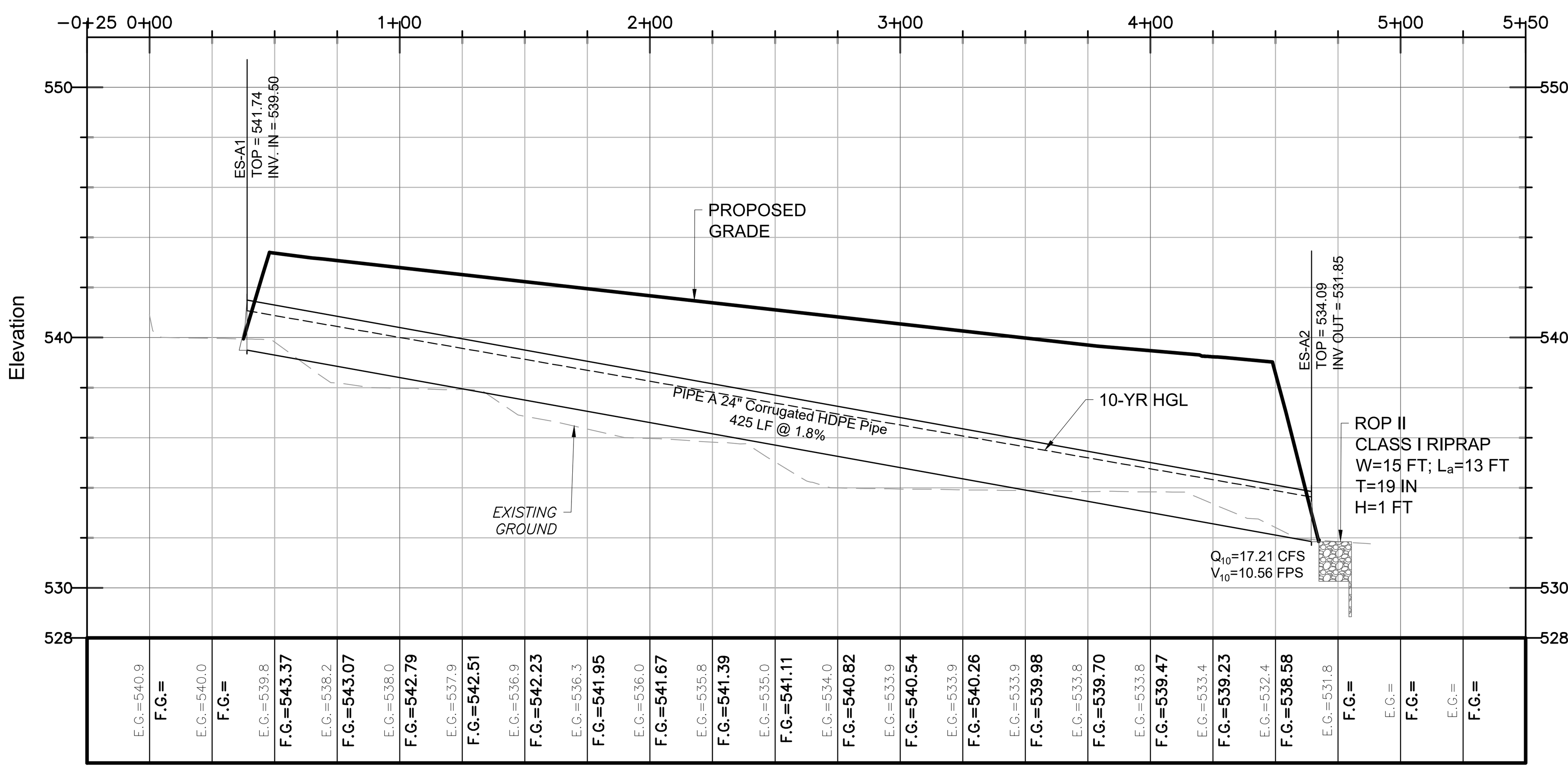

PROFILE OF STORMDRAIN PIPE 100-2
SCALE: HORZ: 1"=50'
VERT: 1"=5'

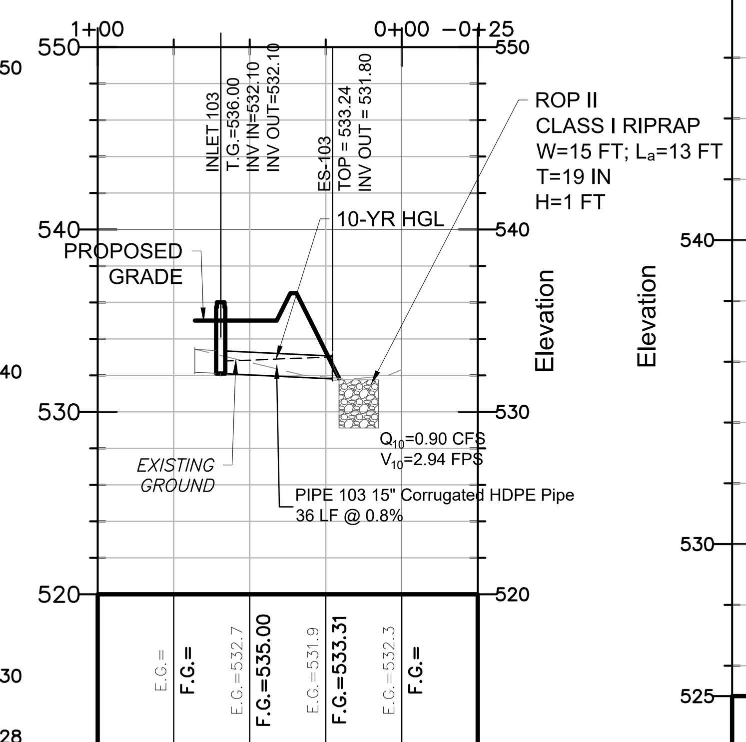

PROFILE OF PIPE 103
SCALE: HORZ: 1"=50'
VERT: 1"=8'

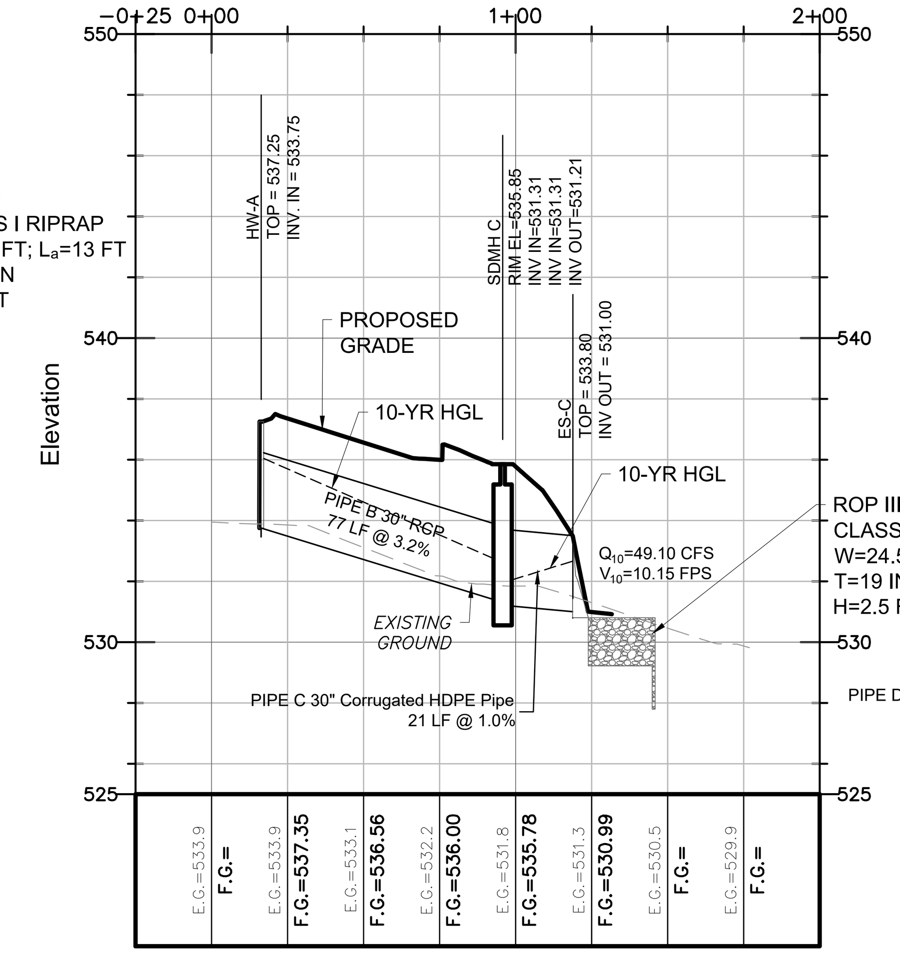

PROFILE OF PIPE B AND C
SCALE: HORZ: 1"=50'
VERT: 1"=5'

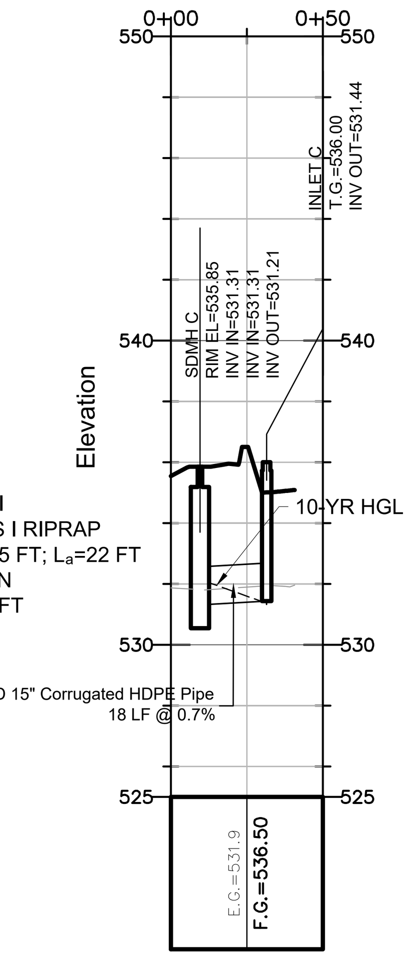

PROFILE OF PIPE D
SCALE: HORZ: 1"=50'
VERT: 1"=5'

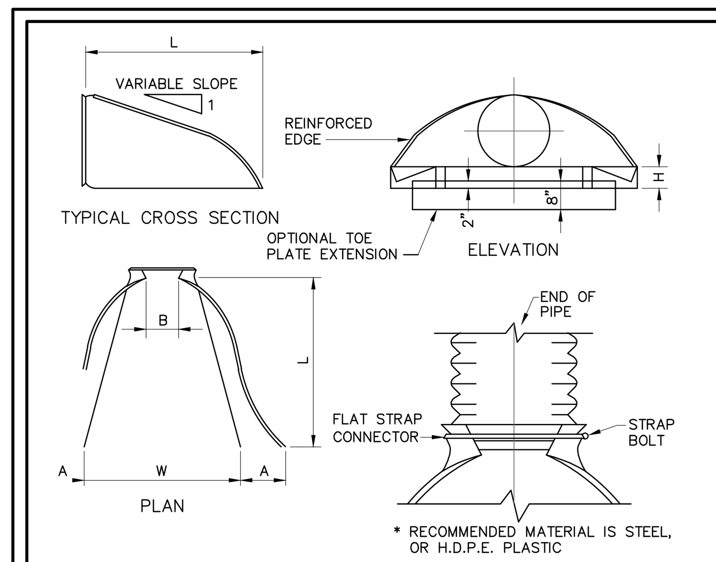

FLARED END SECTION
NOT TO SCALE

NOTES FOR ALL END SECTIONS:

1. ALL THREE–PIECE BODIES TO HAVE 12–GAGE SIDES AND 10–GAUGE CENTER PANELS. MULTIPLE PANEL BODIES TO HAVE LAP SEAMS WHICH ARE TO BE TIGHTLY JOINTED BY GALVANIZED RIVETS OR BOLTS.
2. FOR 60" THROUGH 84" SIZES, REINFORCED EDGES TO BE SUPPLEMENTED WITH STIFFENER ANGLES. THE ANGLES TO BE ATTACHED BY GALVANIZED NUTS AND BOLTS.
3. ANGLE REINFORCEMENT WILL BE PLACED UNDER THE CENTER PANEL SEAMS ON THE 66" AND 72" EQUIVALENT ROUND PIPE–ARCH SIZES.
4. TOE PLATE TO BE AVAILABLE AS AN ACCESSORY, WHEN SPECIFIED ON THE ORDER, AND WILL BE THE SAME GAUGE AS THE END SECTION.
5. STIFFENER ANGLES, ANGLE REINFORCEMENT, AND TOE PLATES ARE THE SAME BASE METAL AS THE END SECTION BODY.
6. END SECTIONS WITH 6:1 SLOPES ARE AVAILABLE IN 12" THROUGH 24" DIAMETERS. *
7. ACTUAL DIMENSIONS MAY VARY SLIGHTLY.

4 **HDPE FLARED END SECTION DETAIL**
NOT TO SCALE

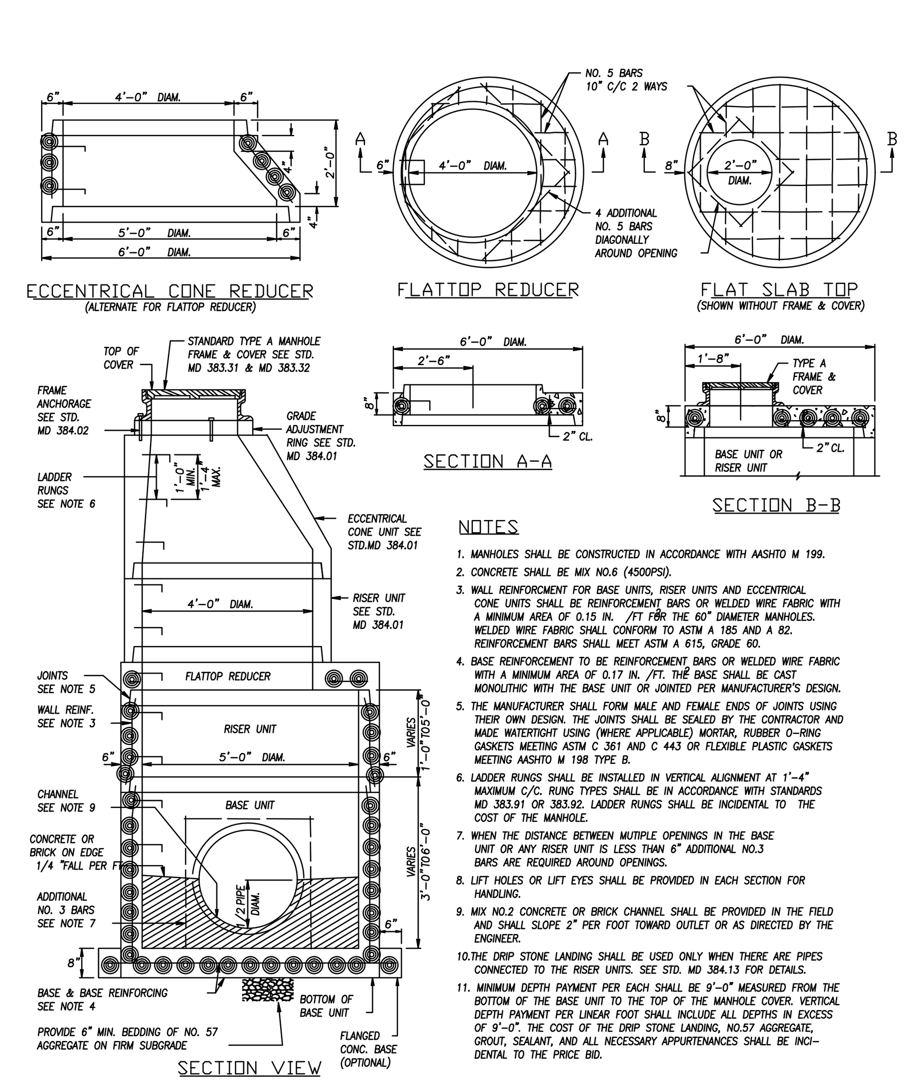

NOTES

1. MANHOLES SHALL BE CONSTRUCTED IN ACCORDANCE WITH AASHTO M 199.
2. CONCRETE SHALL BE MIX NO.6 (4500PSI).
3. WALL REINFORCEMENT FOR BASE UNITS, RISER UNITS AND ECCENTRICAL CONE UNITS SHALL BE REINFORCEMENT BARS OR WELDED WIRE FABRIC WITH A MINIMUM AREA OF 0.15 IN. /FT FOR THE 60" DIAMETER MANHOLES. WELDED WIRE FABRIC SHALL CONFORM TO ASTM A 185 AND A 82. REINFORCEMENT BARS SHALL MEET ASTM A 615, GRADE 60.
4. BASE REINFORCEMENT TO BE REINFORCEMENT BARS OR WELDED WIRE FABRIC WITH A MINIMUM AREA OF 0.17 IN. /FT. THE BASE SHALL BE CAST MONOLITHIC WITH THE BASE UNIT OR JOINTED PER MANUFACTURER'S DESIGN.
5. THE MANUFACTURER SHALL FORM MALE AND FEMALE ENDS OF JOINTS USING THEIR OWN DESIGN. THE JOINTS SHALL BE SEALED BY THE CONTRACTOR AND MADE WATERTIGHT USING (WHERE APPLICABLE) MORTAR, RUBBER O-RING GASKETS MEETING ASTM C 361 AND C 443 OR FLEXIBLE PLASTIC GASKETS MEETING AASHTO M 198 TYPE B.
6. LADDER RUNGS SHALL BE INSTALLED IN VERTICAL ALIGNMENT AT 1'-4" MAXIMUM C/C. RUNG TYPES SHALL BE IN ACCORDANCE WITH STANDARDS MD 383.91 OR 383.92. LADDER RUNGS SHALL BE INCIDENTAL TO THE COST OF THE MANHOLE.
7. WHEN THE DISTANCE BETWEEN MUTIPLE OPENINGS IN THE BASE UNIT OR ANY RISER UNIT IS LESS THAN 6" ADDITIONAL NO.3 BARS ARE REQUIRED AROUND OPENINGS.
8. LIFT HOLES OR LIFT EYES SHALL BE PROVIDED IN EACH SECTION FOR HANDLING.
9. MIX NO.2 CONCRETE OR BRICK CHANNEL SHALL BE PROVIDED IN THE FIELD AND SHALL SLOPE 2" PER FOOT TOWARD OUTLET OR AS DIRECTED BY THE ENGINEER.
10. THE DRIP STONE LANDING SHALL BE USED ONLY WHEN THERE ARE PIPES CONNECTED TO THE RISER UNITS. SEE STD. MD 384.13 FOR DETAILS.
11. MINIMUM DEPTH PAYMENT PER EACH SHALL BE 9'-0" MEASURED FROM THE BOTTOM OF THE BASE UNIT TO THE TOP OF THE MANHOLE COVER. VERTICAL DEPTH PAYMENT PER LINEAR FOOT SHALL INCLUDE ALL DEPTHS IN EXCESS OF 9'-0". THE COST OF THE DRIP STONE LANDING, NO.57 AGGREGATE, GROUT, SEALANT, AND ALL NECESSARY APPURTENANCES SHALL BE INCIDENTAL TO THE PRICE BID.

SPECIFICATION 305 | CATEGORY CODE ITEMS
APPROVED — DIRECTOR – OFFICE OF HIGHWAY DEVELOPMENT
APPROVAL • SHA REVISIONS: APPROVAL 2-22-91, REVISED 10-1-01 | APPROVAL • FEDERAL REVISIONS: APPROVAL 1-2-91

Maryland Department of Transportation
STATE HIGHWAY ADMINISTRATION
STANDARDS FOR HIGHWAYS AND INCIDENTAL STRUCTURES

60" DIAMETER PRECAST MANHOLE FOR 27" TO 36" PIPES

STANDARD NO. MD 384.03

1 **60" PRECAST MANHOLE DETAIL**
NOT TO SCALE

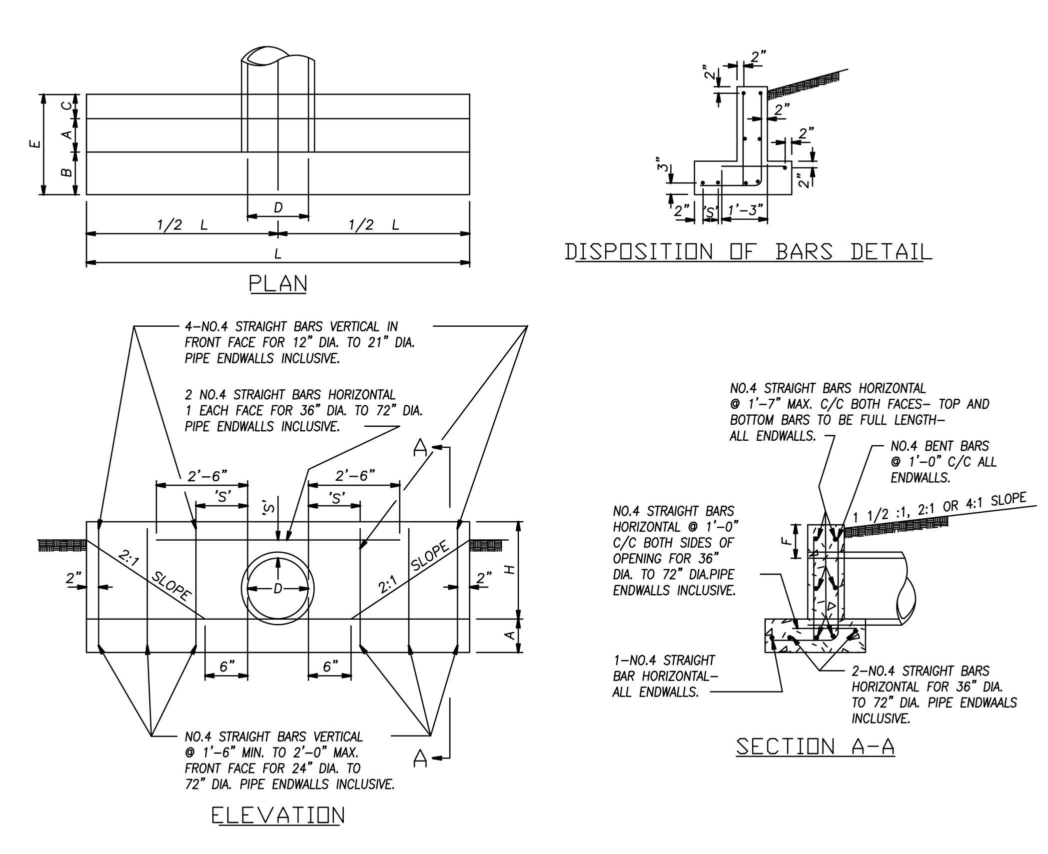

QUANTITIES FOR ESTIMATING PURPOSES ONLY

OPENING D (INCHES)	OPENING AREA (SQ.FT.)	A	B	C	E	F	H	L	CONC. C.Y.	STEEL LBS.
12	0.79	9"	6"	6"	1'–9"	9"	1'–9"	6'–6"	0.61	41
15	1.23	9"	6"	6"	1'–9"	9"	2'–0"	7'–9"	0.77	47
18	1.77	9"	6"	6"	1'–9"	9"	2'–3"	9'–0"	0.95	54
21	2.40	9"	6"	6"	1'–9"	9"	2'–6"	10'–3"	1.14	70
24	3.14	9"	14"	6"	2'–5"	9"	2'–9"	11'–6"	1.56	80
27	3.98	9"	14"	6"	2'–5"	9"	3'–0"	12'–10"	1.82	88
30	4.91	9"	14"	6"	2'–5"	12"	3'–6"	14'–2"	2.22	98
33	5.94	9"	14"	6"	2'–5"	12"	3'–9"	15'–5"	2.48	105
36	7.07	12"	16"	10"	3'–2"	12"	4'–0"	16'–8"	4.16	182
42	9.62	12"	16"	10"	3'–2"	12"	4'–6"	19'–2"	5.07	206
48	12.57	12"	16"	10"	3'–2"	12"	5'–0"	21'–8"	6.09	244
54	15.90	12"	20"	12"	3'–8"	12"	5'–6"	24'–2"	7.62	275
60	19.64	12"	20"	12"	3'–8"	12"	6'–0"	26'–8"	8.82	304
72	28.27	12"	20"	12"	3'–8"	12"	7'–0"	31'–8"	11.46	377

'S' DISTANCES

4" FOR 12" DIA. TO 21" DIA. PIPES INCLUSIVE.
6" FOR 24" DIA. TO 36" DIA. PIPES INCUSIVE.
8" FOR 42" DIA. TO 72" DIA. PIPES INCLUSIVE.

GENERAL NOTES

SPECIFICATIONS: LATEST S.H.A.
CONCRETE SHALL BE MIX NO.2
REINFORCING: DEFORMED STEEL BARS–NO.4
CHAMFER: ALL EXPOSED EDGES 1"x1" OR AS DIRECTED

2 **STANDARD TYPE C ENDWALL DETAIL**
NOT TO SCALE

NYLOPLAST DRAIN BASIN WITH DOME GRATE

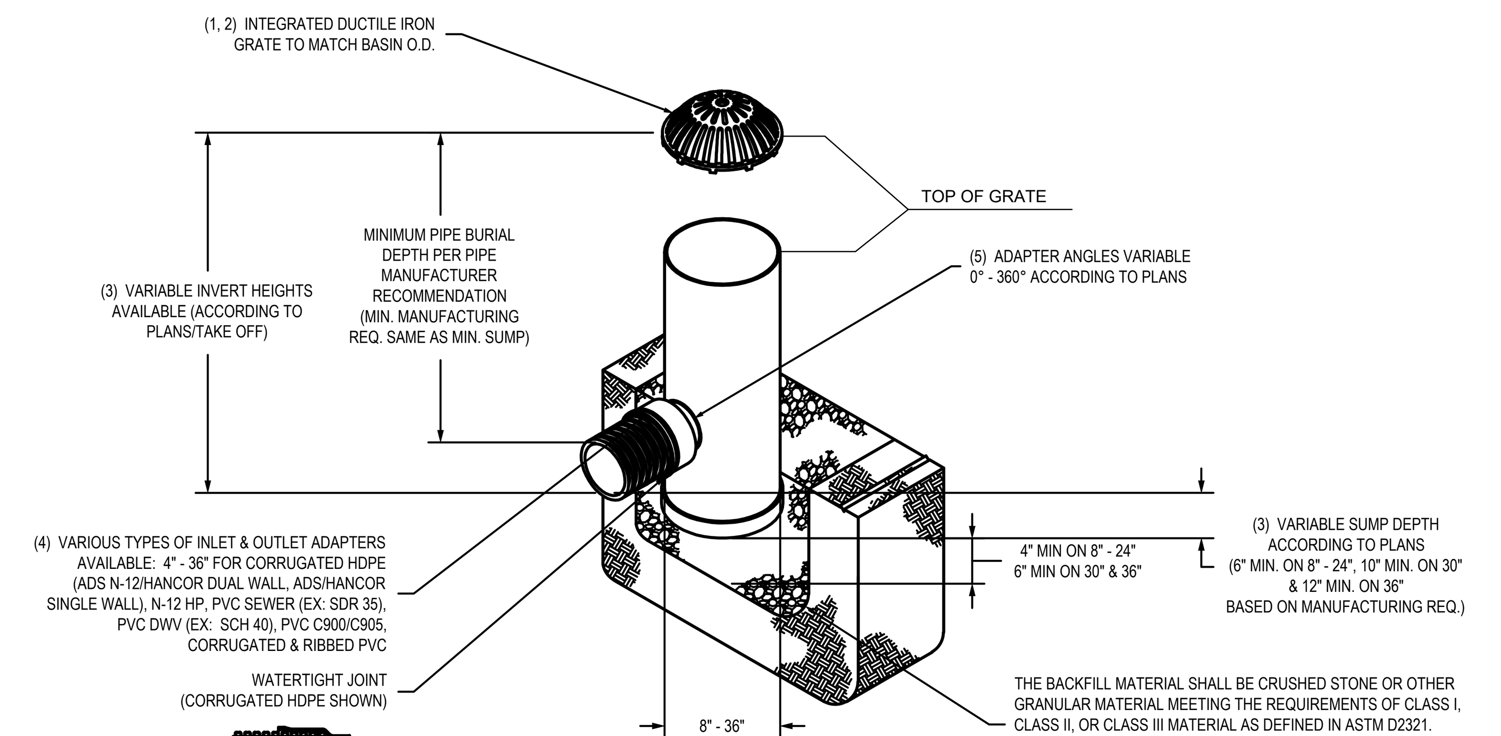

1 - 8" - 30" DOME GRATES SHALL BE DUCTILE IRON PER ASTM A536 GRADE 70-50-05.
2 - 8" & 10" DOME GRATES FIT ONTO THE DRAIN BASINS WITH THE USE OF A PVC BODY TOP. SEE DRAWING NO. 7001-110-045.
3 - DRAIN BASIN TO BE CUSTOM MANUFACTURED ACCORDING TO PLAN DETAILS. RISERS ARE NEEDED FOR BASINS OVER 84" DUE TO SHIPPING RESTRICTIONS. SEE DRAWING NO. 7001-110-065.
4 - DRAINAGE CONNECTION STUB JOINT TIGHTNESS SHALL CONFORM TO ASTM D3212 FOR CORRUGATED HDPE (ADS N-12/HANCOR DUAL WALL), N-12 HP, & PVC SEWER (4" - 36").
5 - ADAPTERS CAN BE MOUNTED ON ANY ANGLE 0° TO 360°. TO DETERMINE MINIMUM ANGLE BETWEEN ADAPTERS SEE DRAWING NO. 7001-110-012.
6 - 8" - 30" DOME GRATES HAVE NO LOAD RATING.

THIS PRINT DISCLOSES SUBJECT MATTER IN WHICH NYLOPLAST HAS PROPRIETARY RIGHTS. THE RECEIPT OR POSSESSION OF THIS PRINT DOES NOT CONFER, TRANSFER, OR LICENSE THE USE OF THE DESIGN OR TECHNICAL INFORMATION SHOWN HEREIN REPRODUCTION OF THIS PRINT OR ANY INFORMATION CONTAINED HEREIN, OR MANUFACTURE OF ANY ARTICLE HEREFROM, FOR THE DISCLOSURE TO OTHERS IS FORBIDDEN, EXCEPT BY SPECIFIC WRITTEN PERMISSION FROM NYLOPLAST. ©2013 NYLOPLAST

DRAWN BY EBC | DATE 03-25-10 | REVISED BY NMH | DATE 06-12-18 | MATERIAL | PROJECT NO./NAME
Nyloplast — 3130 VERONA AVE, BUFORD, GA 30518, PHN (770) 932-2443, FAX (770) 932-2490, www.nyloplast-us.com
TITLE: DRAIN BASIN WITH DOME GRATE QUICK SPEC INSTALLATION DETAIL
DWG SIZE A | SCALE 1:40 | SHEET 1 OF 1 | DWG NO. 7001-110-397 | REV E

3 **NYLOPLAST INLET DETAIL**
NOT TO SCALE

OWNER/DEVELOPER:
JOHN R. OLIVER CO., INC.
C/O TAYLOR OLIVER
19733 LEITERSBURG PIKE
HAGERSTOWN, MD 21742
PHONE: 301-797-0000

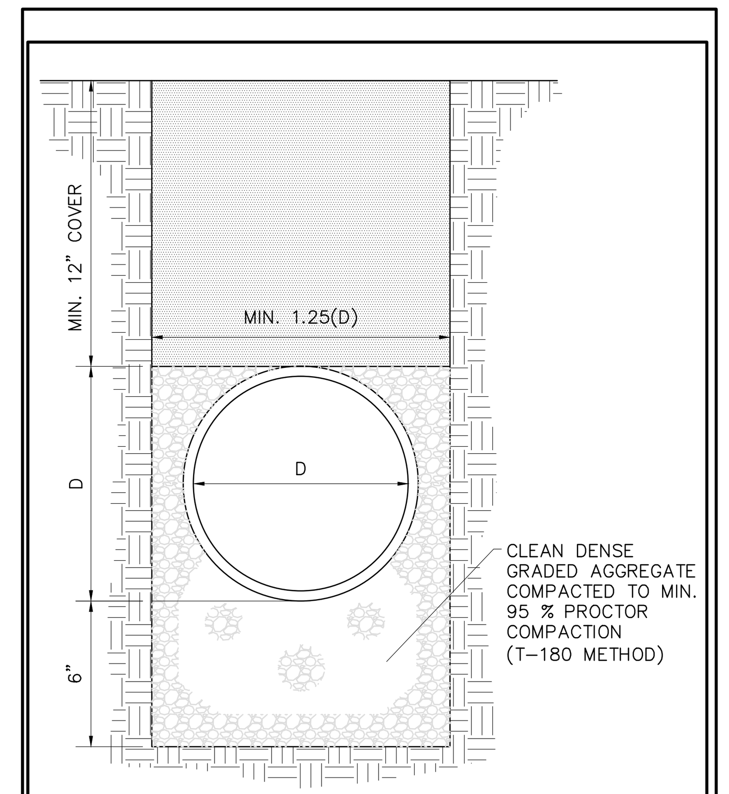

BEDDING DETAIL FOR HDPE PIPE
NOT TO SCALE

5 **HDPE BEDDING DETAIL**
NOT TO SCALE

TRIAD ENGINEERING, INC.
1075-D SHERMAN AVENUE
HAGERSTOWN, MD 21740
PH: 301.797.6400 FAX: 301.797.2424
OFFICE LOCATIONS
MARYLAND ○ PENNSYLVANIA ○ VIRGINIA ○ WEST VIRGINIA

REV. #	DATE	DESCRIPTION	BY
1	11-21-2023	PER WASH CO. ENGINEERING REVIEW COMMENTS	BDB
			BDB

CADD FILE: 03-22-0792-PH2-C-8-0
DRAWN BY: STAFF | CHECKED BY: BJS
DATE: 7-31-2023 | SCALE: AS SHOWN

I HEREBY CERTIFY THAT THESE DOCUMENTS WERE PREPARED OR APPROVED BY ME, AND THAT I AM A DULY LICENSED PROFESSIONAL ENGINEER UNDER THE LAWS OF THE STATE OF MARYLAND, LICENSE NO. 34688 EXPIRATION DATE: 7-09-25

12-04-2023

SITE PLAN
NORTH END STORAGE II - PHASE 2
SITUATED ON SOUTH SIDE LONGMEADOW ROAD, 0.25 MILES WEST OF ITS INTERSCTION WITH MARYLAND ROUTE 60, HAGERSTOWN, MARYLAND
STORM DRAIN PLAN AND PROFILE, NOTES & DETAILS
ZONING: BL | WATERSHED CODE: 02140502 ANTIETAM CREEK
TAX MAP: 0025 | GRID: 0020 | PARCEL: 0628/po 0113 | ELEC. DIST.: 18

TRIAD ENGINEERING, INC.
www.triadeng.com

SHEET NUMBER:
C.8.0
JOB NO.: 03-22-0792

SP-23-033

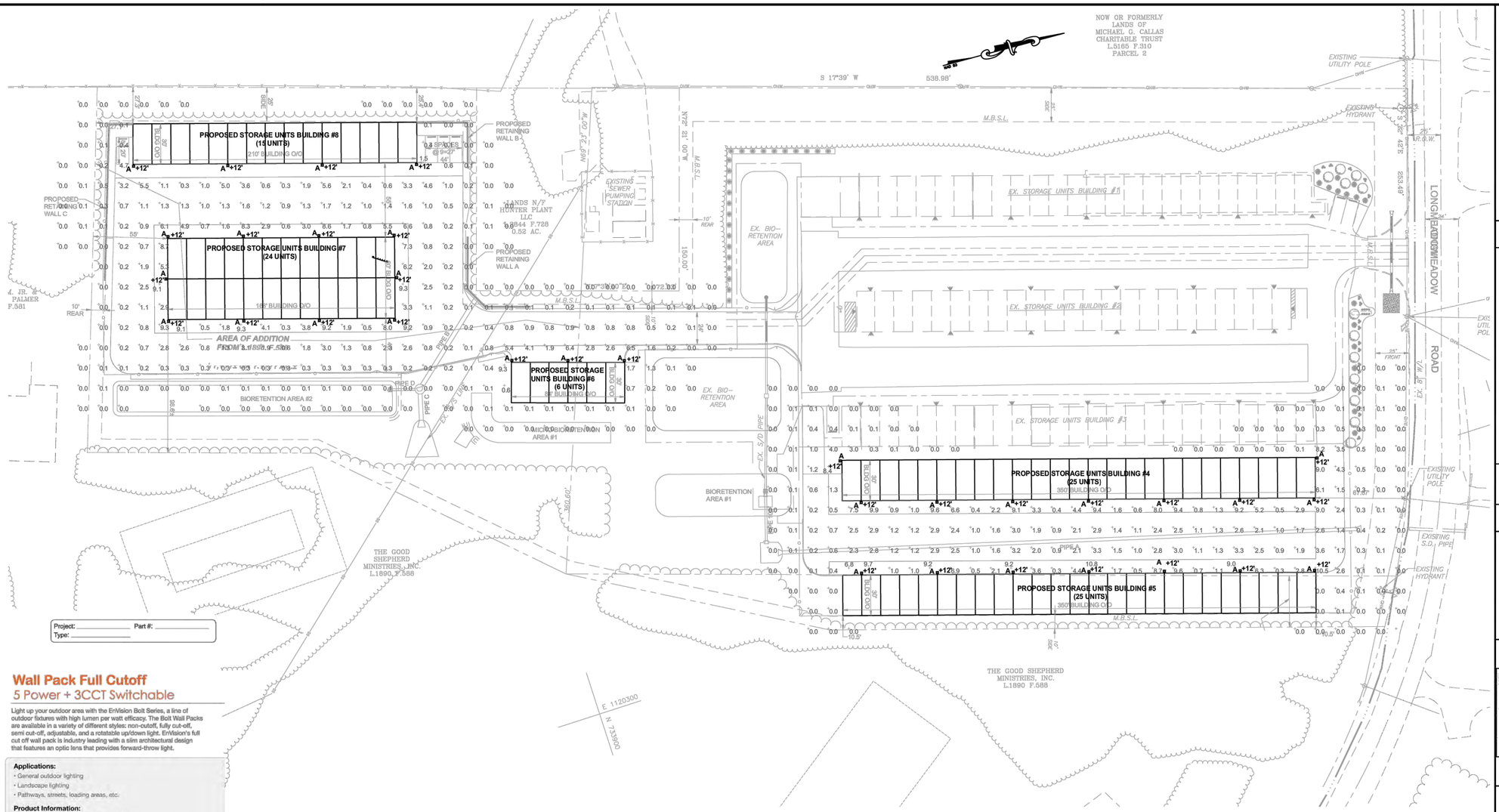

Project: _____ Part #: _____
Type: _____

EnVisionLED

Photocell Included

Wall Pack Full Cutoff
5 Power + 3CCT Switchable

Light up your outdoor area with the EnVision Bolt Series, a line of outdoor fixtures with high lumen per watt efficacy. The Bolt Wall Packs are available in a variety of different styles: non-cutoff, fully cut-off, semi cut-off, adjustable, and a rotatable up/down light. EnVision's full cut off wall pack is industry leading with a slim architectural design that features an optic lens that provides forward-throw light.

Applications:
- General outdoor lighting
- Landscape lighting
- Pathways, streets, loading areas, etc.

Product Information:
- Photocell included (Easily disconnectable)
- Sturdy die-cast aluminum housing finished with corrosion free powder coat
- Suitable for wet location, professionally waterproofed IP67
- Optional photocell available
- Average life (L70) of 70,000 hours with the integration of Philips Lumileds 3030 chips
- Dark sky compliant

Detail Specifications:
- Operating temperature -4 ~ +124° F
- PF >0.9 / Input: .85A/ Output: 36-66V DC
- 120-277V or 480V

Why pick the Envision Wall Pack?:
- Each wall pack is tested for 120 hours before being packed and shipped
- Optic lens lens provides forward throw light
- Easy installation with twistable screw knock-outs
- 5 year limited warranty. 10 year warranty available

L.E.D - W.P.F.C - 5-Power Selectable - T.R.I - Finish - P.C - Voltage - Sensor - EMB - Warranty
(1 – 2 – 3 – 4 – 5 – 6 – 7 – 8)

1 Product	2 5-Power Selectable	3 Color	4 Finish	5 Voltage	6 Sensor	7 Emergency	8 Warranty
LED-WPFC	5P80 80/64/48/32/16W 11,600lm (80W) / 9,280lm (64W) 6,960lm (48W) / 4,640 (32W) 2,320 (16W) 5P150 150/120/90/60/30W 21,750lm (150W) / 17,400lm (120W) 13,050lm (90W) / 8,700 (60W) 4,350 (30W)	TRI 3CCT Switchable 50/40/30K	BZ Bronze Custom* Custom* (Custom colors available 1-10 day lead time,colors include white, black, etc)	UNV Universal HV High Voltage	(Blank) None BMS Bi-Level Motion Sensor (Attached)	(Blank) None EMB Emergency Backup (90 Mins.)	(Blank) 5 Year (std.) 10YR 10 Year

Specs and model numbers are subject to change with or without notice

EnVision LED Lighting, Inc.
4845 S. Eastern Ave | Bell, CA 90201 | Tel.: 323-604-0066 | www.envisionledlighting.com

2 / PH-1 **TYPE "A"**
NO SCALE

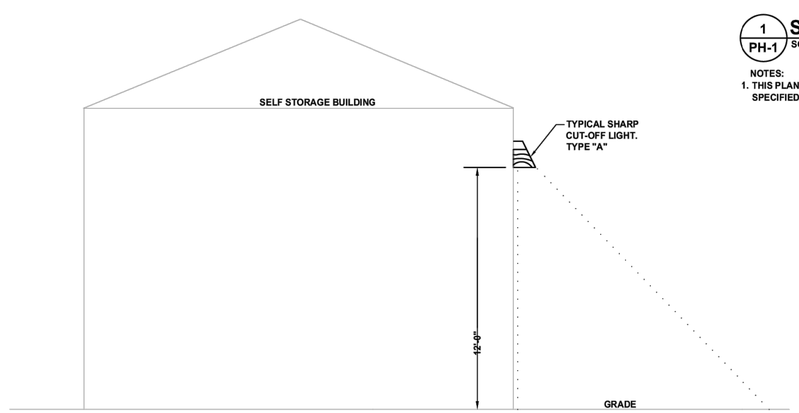

2 / PH-1 **TYPE "A" TYPICAL MOUNTING**
NO SCALE

1 / PH-1 **SITE PLAN - PHOTOMETRICS**
SCALE: 1" = 40' - 0"

NOTES:
1. THIS PLAN DOCUMENTS THE FOOTCANDLE LEVELS BASED ON THE LIGHT FIXTURES SPECIFIED. THE NUMBERS REPRESENT HORIZONTAL FOOTCANDLE LEVELS AT ABOVE GRADE.

LIGHT FIXTURE SCHEDULE

TYPE	DESCRIPTION	MANUFACTURER	EQUALS
A	WALL MOUNT, LED SHARP CUTOFF LIGHT MOUNTED AT 12' ABOVE GRADE, DIE CAST ALUMINUM HOUSING, 64 WATTS, 9280 LUMENS. MULTI-VOLT BUILT IN PHOTOCELL, CONFIRM MOUNTING HEIGHT WITH ARCHITECTURAL PLANS.	ENVISION LED-WPFC-5P80-TRI-BZ-PC-UNV	OR APPROVED EQUAL

Professional Certification. I hereby certify that these documents were prepared or approved by me, and that I am a duly licensed professional engineer under the laws of the State of Maryland License 34866, Expiration Date: 10/23/2023

MG Thompson Engineering Inc.
6112 Huckleberry Way
New Market, MD 21774
Phone: 240-669-2532
Fax: 240-668-2534
E-mail: mike@mgthompsonengineering.com
Website: mgthompsonengineering.com

TRIAD ENGINEERING, INC.
1075-D SHERMAN AVENUE
HAGERSTOWN, MD 21740
PH: 301.797.6400 FAX: 301.797.2424
OFFICE LOCATIONS
MARYLAND ◇ PENNSYLVANIA ◇ VIRGINIA ◇ WEST VIRGINIA

REV. #	DATE	DESCRIPTION	BY

CADD FILE: 03-22-0792-PH2-C-3-0 MGT. 23036	CHECKED BY: M.G.T.	
DRAWN BY: D.S.	SCALE: 1" = 40'	
DATE: 08/29/2023		

08-29-2023

NORTH END STORAGE II - PHASE 2
SITUATED ON SOUTH SIDE LONG MEADOW ROAD, 0.25 MILES WEST OF ITS INTERSECTION WITH MARYLAND ROUTE 60, HAGERSTOWN, MARYLAND

SITE PLAN - PHOTOMETRICS

ZONING: (BL) | WATERSHED CODE: 02140502 ANTIETAM CREEK | ELEC. DIST.: 18
TAX MAP: 0025 | GRID: 0020 | PARCEL: 0628

TRIAD
TRIAD ENGINEERING, INC.
www.triadeng.com

SHEET NUMBER:
PH-1
1 of 1
JOB NO.: 23036

SP-23-033

SP-23-034 Meritus School

-Presented is a site plan for student housing to support the adjacent Meritus School of Osteopathic Medicine

-The site is located at 19513 Innovation Drive in Hagerstown

-There will be 2 access points, one from Mt. Aetna Rd., and one from Anatomy Way

-Water and Sewer to be provided by City of Hagerstown.

-Proposed lighting is pole mounted and building mounted

-Site has proposed parking of 523 spaces for the housing and community center

WASHINGTON COUNTY DEPARTMENT OF PLANNING & ZONING
747 Northern Avenue | Hagerstown, MD 21742-2723 | P:240.313.2430 | F:240.313.2431 | Hearing Impaired: 7-1-1

SITE PLAN STAFF REPORT

BASE INFORMATION

SITE NAME.....:	Meritus School of Osteopathic Medicine Graduate Student Housing
NUMBER.....:	SP-23-034
OWNER.....:	BOARD OF EDUCATION
LOCATION.....:	19513 INNOVATION Drive Hagerstown, MD 21742
DESCRIPTION.....:	This project is for student housing to support the adjacent Meritus School of Osteopathic Medicine. It involves 2 phases of construction with a total 5 residential buildings and 1 community building. This project also includes all of the typical associated parking, stormwater, utilities, etc.
ZONING.....:	RS; ORI Refer to Map
COMP PLAN LU.....:	Community Facilities
PARCEL.....:	10031141
PLANNING SECTOR.....:	1
ELECTION DISTRICT.....:	10
TYPE.....:	Apartment
GROSS ACRES.....:	28.0276
DWELLING UNITS.....:	5
TOTAL LOTS.....:	1
DENSITY.....:	0.1784 Units Per Acre
PLANNER.....:	Scott A Stotelmyer
ENGINEER.....:	HRG
RECEIVED.....:	September 6, 2023

SITE ENGINEERING

HYDROGRAPHY, SENSITIVE & ENVIRONMENTAL INFORMATION

FLOOD ZONE.....:	No
WETLANDS.....:	None
WATERSHED.....:	Antietam Creek
ENDANGERED SPECIES.....:	None
HISTORIC INVENTORY.....:	I438
EASEMENTS PRESENT.....:	SP-09-026

Staff Comments:

Not Applicable

WASHINGTON COUNTY DEPARTMENT OF PLANNING & ZONING
747 Northern Avenue | Hagerstown, MD 21742-2723 | P:240.313.2430 | F:240.313.2431 | Hearing Impaired: 7-1-1

SITE DESIGN

Impervious Area Plan	**Impervious Maximum Allowed**	**Open Space Area Planned**
Open Space Minimum Required	**Residential Amenity Plans**	**Solid Waste Disposal Plans**
Materials Stored on Site	**Buffer Design Meets Requirements**	**Landscaping Meets Requirements**
Lighting Plan Meets Requirements	**Pedestrian Access is Adequate**	**Bus Stop is Within Walking Distance**
Loading Area Meets Requirements		
Parking Spaces - Total Planned	**Parking Spaces - Per Dwelling Unit**	
Parking Spaces - Minimum Required	**Recreational Parking Provided**	

Not Fast Track

SCHOOL INFORMATION

	ELEMENTARY	**MIDDLE**	**HIGH**
SCHOOL DISTRICT	Eastern	E Russell Hicks	South Hagerstown
PUPIL YIELD			
CURRENT ENROLLMENT			
MAXIMUM CAPACITY			

PUBLIC FACILITIES INFORMATION

FIRE DISTRICT.....:	FUNKSTOWN
AMBULANCE DISTRICT.....:	HAGERSTOWN

WATER & SEWER INFORMATION

	WATER	**SEWER**
METHOD.....:	City	City
SERVICE AREA.....:	City	City
PRIORITY.....:	1-Existing Service	1-Existing Service
NEW HYDRANTS.....:		
GALLONS PER DAY SEWAGE...:		
PLANT INFO.....:		Hagerstown (City)

SITE PLAN
FOR
MERITUS SCHOOL OF OSTEOPATHIC MEDICINE GRADUATE STUDENT HOUSING
JANUARY 16, 2024
10TH ELECTION DISTRICT WASHINGTON COUNTY, MARYLAND

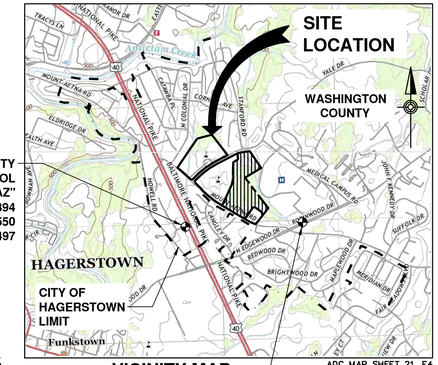

WASHINGTON COUNTY SURVEY CONTROL POINT: "DAYSDAIR AZ" NORTHING=711911.0394 EASTING=1116666.8550 ELEV=538.497

VICINITY MAP
SCALE: 1"=2000'

ADC MAP SHEET 21, E4
WASHINGTON COUNTY SURVEY CONTROL POINT: "EDGE" NORTHING=712042.5458 EASTING=1119929.9646 ELEV=571.690

UTILITY NOTIFICATION

THE SOIL CONSERVATION DISTRICT MAKES NO REPRESENTATION AS TO THE EXISTENCE OR NONEXISTENCE OF ANY UTILITIES AT THE CONSTRUCTION SITE. SHOWN ON THESE CONSTRUCTION DRAWINGS ARE THOSE UTILITIES WHICH HAVE BEEN IDENTIFIED. IT IS THE RESPONSIBILITY OF THE LANDOWNERS OR OPERATORS AND CONTRACTORS TO ASSURE THEMSELVES THAT NO HAZARD EXISTS OR DAMAGE WILL OCCUR TO UTILITIES. IT IS SUGGESTED THAT MISS UTILITY BE CONTACTED AT:
PHONE NO._____

DISTURBED AREA QUANTITY

THE TOTAL AREA TO BE DISTURBED SHOWN ON THESE PLANS HAS BEEN DETERMINE TO BE APPROXIMATELY 14.5 ACRES AND THE TOTAL AMOUNT OF EXCAVATION AND FILL AS SHOWN ON THESE PLANS HAS BEEN COMPUTED TO BE APPROXIMATELY 35,000 AND APPROXIMATELY 2,000 CU. YDS. OF FILL.

WASHINGTON COUNTY SOIL CONSERVATION DISTRICT SOIL EROSION AND SEDIMENT CONTROL PLAN APPROVAL

BY: _____

DATE: _____
(PLAN IS VALID FOR TWO YEARS FROM DATE OF APPROVAL)

APPROVAL: WASHINGTON COUNTY DIVISION OF ENGINEERING

SIGNATURE

DATE

WASHINGTON COUNTY DEPARTMENT OF WATER QUALITY

THIS PLAN/PLAT HAS BEEN REVIEWED BY THE WASHINGTON COUNTY DEPARTMENT OF WATER QUALITY FOR INCLUSION INTO THE COUNTY CAPACITY MANAGEMENT PLAN FOR THE SYSTEM THAT SERVES THIS PROJECT. ALLOCATION GRANTED FOR CONSTRUCTION SHOWN ON THIS PLAN/PLAT SHALL BE IN ACCORDANCE WITH THE CAPACITY MANAGEMENT PLAN DEVELOPED FOR THIS SYSTEM, BASED ON AVAILABILITY OF ALLOCATION REMAINING IN THE FACILITY.

SIGNATURE DATE

ENGINEER'S STORMWATER MANAGEMENT CERTIFICATION

"I VERIFY AND AFFIRM THAT THE CONSTRUCTION FOR THE STORMWATER MANAGEMENT FACILITIES AS PERFORMED EITHER MEETS OR EXCEEDS THE REQUIREMENTS AND DESIGN INTENT OF THIS PLAN, INCLUDING ALL SPECIFICATIONS AND REFERENCED STANDARDS, AND HAS BEEN COMPLETED IN ACCORDANCE WITH GOOD CONSTRUCTION PRACTICES. I ALSO VERIFY AND AFFIRM THAT I HAVE REVIEWED THE CONSTRUCTION INSPECTION DOCUMENTATION AND THE AS-BUILT INFORMATION; THAT IT HAS BEEN DONE IN ACCORDANCE WITH WASHINGTON COUNTY REQUIREMENTS AND AT A LEVEL DEEMED NECESSARY TO ASSURE THE VERIFICATION MADE HEREIN; AND ALL DISCREPANCIES BETWEEN THE AS-BUILT INFORMATION AND APPROVED PLANS HAVE BEEN NOTED AND CONSIDERED ACCEPTABLE TO THE CONSULTANT."

1/16/23
SIGNATURE DATE

STATE OF MARYLAND SCOTT BERT 59144 PROFESSIONAL ENGINEER SEAL

OWNER/DEVELOPERS CERTIFICATION

"I/WE CERTIFY ALL/ANY PARTIES RESPONSIBLE FOR CLEARING, GRADING, CONSTRUCTION AND/OR DEVELOPMENT WILL; BE DONE PURSUANT TO THIS PLAN AND RESPONSIBLE PERSONNEL INVOLVED IN THE CONSTRUCTION PROJECT WILL HAVE A CERTIFICATE OF TRAINING AT A MARYLAND DEPT. OF THE ENVIRONMENT APPROVED TRAINING PROGRAM FOR THE CONTROL OF SOIL EROSION AND SEDIMENT."

1-15-2024 David Lehr
DATE PRINTED NAME

SIGNATURE

OWNER/DEVELOPERS CERTIFICATION

"I/WE CERTIFY THAT ALL CLEARING, GRADING, CONSTRUCTION AND/OR DEVELOPMENT WILL BE DONE PURSUANT TO THIS PLAN AND IN ACCORDANCE WITH THE STORMWATER MANAGEMENT ORDINANCE OF WASHINGTON COUNTY AND THE POLICY ON CONSTRUCTION OF SUBDIVISION INFRASTRUCTURE FOR ACCEPTANCE AND OWNERSHIP BY WASHINGTON COUNTY (S-3)."

1/15/2024 David Lehr
DATE PRINTED NAME

SIGNATURE

ENGINEER/ARCHITECT DESIGN CERTIFICATION

I HEREBY CERTIFY THIS PLAN FOR SOIL EROSION AND SEDIMENT CONTROL HAS BEEN DESIGNED IN ACCORDANCE WITH LOCAL ORDINANCES, COMAR 26.17.01.07, AND MARYLAND STANDARDS AND SPECIFICATIONS FOR SOIL EROSION AND SEDIMENT CONTROL.

1/16/23 59144
DATE REG. NO. SIGNATURE

ESD NARRATIVE

INTRODUCTION

THE PROJECT CONSISTS OF DEVELOPING NEW STUDENT HOUSING TO SUPPORT MERITUS HEALTH'S NEW MERITUS COLLEGE OF OSTEOPATHIC MEDICINE (MSOM). IMPROVEMENTS WILL INCLUDE FIVE (5) RESIDENTIAL BUILDINGS, A COMMUNITY CENTER, OUTDOOR RECREATIONAL AREA, LANDSCAPING, PARKING AND ACCESS DRIVES, AND STORMWATER MANAGEMENT.

THE PROJECT IS LOCATED ALONG MOUNT AETNA DRIVE, ADJACENT TO THE CHILDREN'S VILLAGE OF WASHINGTON COUNTY, AND NEAR MERITUS HEALTH MEDICAL CENTER AND FUTURE MSOM. AN ACCESS DRIVE BETWEEN THE MULTI-FAMILY STUDENT HOUSING DEVELOPMENT AND MSOM IS ALSO PROPOSED. THE PROPOSED IMPROVEMENTS WILL HAVE AN APPROXIMATE LIMIT OF DISTURBANCE OF 14.5 ACRES.

EXISTING FEATURES AND SENSITIVE RESOURCES

THE PROPERTY PRIMARILY CONSISTS OF FORESTED AREAS AND UNDEVELOPED OPEN SPACE, WITH THE EXISTING BOARD OF EDUCATION REGIONAL STORMWATER POND BEING LOCATED AT THE NORTHERN END. IT IS OUR UNDERSTANDING THAT THE BOARD OF EDUCATION REGIONAL STORMWATER POND WAS DESIGNED TO PROVIDE CHANNEL PROTECTION VOLUME (CPV) FOR THE 24-HOUR PERIOD BASED ON PREVIOUS DESIGN REPORTS. THE PROPERTY LIES WITHIN THE ANTIETAM CREEK WATERSHED WHICH HAS A USE CLASS DESIGNATION OF IV-P.

SKELLY & LOY CONDUCTED A WETLAND AND WATERWAYS SURVEY AND DETERMINED THAT A SMALL NONTIDAL WETLAND (+/- 0.07 ACRES) WAS LOCATED ON THE PROPERTY. DISTURBANCES TO THE EXISTING WETLAND ARE NOT ANTICIPATED. AN EXISTING FOREST CONSERVATION EASEMENT ALSO EXISTS ON THE PROPERTY.

AREAS OF STEEP SLOPES (GREATER THAN 25%) ARE LOCATED THROUGHOUT THE PROPERTY. PORTIONS OF THE DEVELOPMENT APPEAR TO BE SITUATED IN STEEP SLOPE AREAS. PROPER SEDIMENT AND EROSION CONTROL MEASURES SHALL BE IMPLEMENTED DURING CONSTRUCTION TO MAINTAIN PROPER STABILIZATION.

PROPOSED CONDITIONS

THE PROPOSED CONDITIONS WILL INCLUDE DEVELOPING APPROXIMATELY 14.5 ACRES OF THE EXISTING PROPERTY. IMPROVEMENTS INCLUDE NEW RESIDENTIAL AND COMMUNITY BUILDINGS, SIDEWALKS, ACCESS DRIVES, PARKING, AND LANDSCAPING. IN ORDER TO MANAGE THE INCREASE IN IMPERVIOUS AREA, THE PROJECT WILL INCORPORATE ENVIRONMENTAL SITE DESIGN PRACTICES TO MIMIC PRE-DEVELOPMENT CHARACTERISTICS.

THE INTENT OF THE DEVELOPMENT IS TO MAINTAIN RUNOFF AND FLOW PATH CHARACTERISTICS FOR THE EXISTING CONDITIONS. NATURAL AREAS WERE CONSERVED TO THE MAXIMUM EXTENT PRACTICABLE. FOR THE ENVIRONMENTAL SITE DESIGN, THE PROJECT WILL INCORPORATE A COMBINATION CHAPTER 5 NONSTRUCTURAL AND MICRO-SCALE PRACTICES AND CHAPTER 3 STRUCTURAL PRACTICES. THE EXISTING TOTAL IMPERVIOUS AREA IS APPROXIMATELY 0.08 ACRES. THE PROPOSED DEVELOPMENT IS ANTICIPATED TO HAVE A TOTAL IMPERVIOUS AREA OF APPROXIMATELY 7.60 ACRES. THEREFORE THE REQUIRED ESDV IS 49,429 CF AND THE REQUIRED WATER QUALITY VOLUME (WQV) IS 27,461 CF BASED ON THE MARYLAND ESD SPREADSHEET, INCLUDED IN APPENDIX A.

THE PROPOSED DEVELOPMENT WILL ULTIMATELY DRAIN TO THE EXISTING BOARD OF EDUCATION REGIONAL STORMWATER POND LOCATED AT THE NORTHERN LOWER END OF THE PROPERTY. IT IS OUR UNDERSTANDING THAT THE BOARD OF EDUCATION REGIONAL STORMWATER POND WAS DESIGNED TO PROVIDE CPV FOR THE 24-HOUR PERIOD BASED ON PREVIOUS DESIGN REPORTS. AS CPV IS ASSUMED TO BE PROVIDED FOR WITH THE REGIONAL POND, WQV MUST BE ADDRESSED AS PART OF THE DEVELOPMENT. THE REQUIRED WQV WILL BE MET WITH A COMBINATION OF CHAPTER 3 AND CHAPTER 5 PRACTICES. THE CHAPTER 5 NONSTRUCTURAL PRACTICE THAT IS PROPOSED INCLUDES SHEETFLOW TO CONSERVATION AREA. THE CHAPTER 5 STRUCTURAL PRACTICES THAT ARE PROPOSED INCLUDE MICROBIORETENTION. THE COMBINATION OF THESE CHAPTER 5 PRACTICES WILL PROVIDE A TOTAL OF 13,671 CF OF TREATMENT. THE REMAINING 35,758 CF OF VOLUME REQUIRED WILL BE TREATED UTILIZING CHAPTER 3 PRACTICES. CHAPTER 3 PRACTICES INCLUDE PROPOSED STORMWATER FILTER PRACTICES SUCH AS BIORETENTION.

DOWNSTREAM DRAINAGE EVALUATION

THE PROPOSED DEVELOPMENT FLOWS WILL BE DIRECTED TO THE BOARD OF EDUCATION STORMWATER REGIONAL POND. DISCHARGES LEAVING THE SITE WILL BE BY WAY OF EXISTING DISCHARGE POINT THROUGH THE REGIONAL POND. THE POST-DEVELOPMENT PEAK FLOW RATES DISCHARGED FROM THE REGIONAL POND WILL BE LESS THAN OR EQUAL TO PRE-DEVELOPMENT PEAK FLOW RATES.

CONTACT INFORMATION

OWNER:
BOARD OF EDUCATION WASHINGTON COUNTY, MD
10435 DOWNSVILLE PIKE
HAGERSTOWN, MD 21740

EQUITABLE OWNER:
MERITUS MEDICAL CENTER, INC.
11116 MEDICAL CAMPUS ROAD
HAGERSTOWN, MD 21742

CONTACT PERSON:
DAVID LEHR
EMAIL: DAVID.LEHR@MERITUSHEALTH.COM
PHONE: 301-790-8215

DEVELOPER:
RADNOR PROPERTY GROUP, LLC
100 EAST LANCASTER AVENUE
SUITE 300
WAYNE, PA 19087

CONTACT PERSON:
TIM GIGLIOTTI
EMAIL: TGIGLIOTTI@RADNORPROPERTY.COM
PHONE: 610-212-4454

CIVIL ENGINEER:
HRG
5 NORTH MAIN STREET
SUITE 3
CHAMBERSBURG, PA 17201

PROJECT MANAGER:
SCOTT BERT, PE
EMAIL: SBERT@HRG-INC.COM
PHONE: 717-254-0066

LANDSCAPE:
DESIGN COLLECTIVE
100 EAST PRATT STREET, 18TH FLOOR
BALTIMORE, MD 21202
PHONE: 410-685-6655

SURVEY:
HANOVER LAND SERVICES
194 EAST MAIN STREET
WESTMINSTER, MD 21157
PHONE: 410-751-8795

SENSITIVE AREA NOTICE

THE STREAM BUFFERS SHOWN HEREON ARE ESTABLISHED PURSUANT TO THE REQUIREMENTS OF THE WASHINGTON COUNTY SUBDIVISION ORDINANCE, ARTICLE IV, SECTION 409. IN AN EFFORT TO PRESERVE OR IMPROVE WATER QUALITY, THE PROPERTY OWNER IS REQUIRED TO ESTABLISH AND THEREAFTER MAINTAIN IN PERPETUITY VEGETATIVE GROUND COVER IN ACCORDANCE WITH URBAN BEST MANAGEMENT PRACTICES RECOMMENDED BY THE WASHINGTON COUNTY SOIL CONSERVATION DISTRICT. NO PERMANENT STRUCTURES OR CONSTRUCTION ARE PERMITTED WITHIN THE STREAM BUFFER EXCEPT THOSE DESIGNED TO IMPROVE WATER QUALITY OR FLOW AS APPROVED BY THE WASHINGTON COUNTY PLANNING COMMISSION IN ACCORDANCE WITH ALL APPLICABLE REGULATIONS, LAWS, AND POLICIES. NO SEPTIC SYSTEMS SHALL BE CONSTRUCTED WITHIN THE BUFFER NOR SHALL ANY RESERVE AREA BE ESTABLISHED WITHIN THE BUFFER.

SHEET LIST TABLE

SHEET NUMBER	SHEET DESCRIPTION	SHEET TITLE
1	CV	COVER SHEET
2	NT	GENERAL NOTES
3	EC	EXISTING CONDITIONS PLAN
4	SR	SENSITIVE RESOURCES PLAN
5	DM	DEMOLITION PLAN
6	PH	PHASING PLAN
7	SI-OA	OVERALL SITE AND DIMENSION PLAN
8	SI-DT-2	DETAIL SITE AND DIMENSION PLAN
9	SI-DT-2	DETAIL SITE AND DIMENSION PLAN
10	SI-DT-3	DETAIL SITE AND DIMENSION PLAN
11	GR-OA	OVERALL GRADING PLAN
12	GR-DT-1	DETAIL GRADING PLAN
13	GR-DT-2	DETAIL GRADING PLAN
14	GR-DT-3	DETAIL GRADING PLAN
15	STM-OA	OVERALL STORMWATER MANAGEMENT PLAN
16	STM-DT-1	DETAIL STORMWATER MANAGEMENT PLAN
17	STM-DT-2	DETAIL STORMWATER MANAGEMENT PLAN
18	STM-DT-3	DETAIL STORMWATER MANAGEMENT PLAN
19	UT-OA	OVERALL UTILITY PLAN
20	UT-DT-1	DETAIL UTILITY PLAN
21	UT-DT-2	DETAIL UTILITY PLAN
22	UT-DT-3	DETAIL UTILITY PLAN
23	EAS-1	OVERALL EASEMENT PLAN
24	STRM-MIT	STREAM BUFFER MITIGATION PLAN
25	ES-STG1-OA	STAGE 1 OVERALL EROSION & SEDIMENT POLLUTION CONTROL PLAN
26	ES-STG1-DT-1	STAGE 1 DETAIL EROSION & SEDIMENT POLLUTION CONTROL PLAN
27	ES-STG1-DT-2	STAGE 1 DETAIL EROSION & SEDIMENT POLLUTION CONTROL PLAN
28	ES-STG1-DT-3	STAGE 1 DETAIL EROSION & SEDIMENT POLLUTION CONTROL PLAN
29	ES-STG2-OA	STAGE 2 OVERALL EROSION & SEDIMENT POLLUTION CONTROL PLAN
30	ES-STG2-DT-1	STAGE 2 DETAIL EROSION & SEDIMENT POLLUTION CONTROL PLAN
31	ES-STG2-DT-2	STAGE 2 DETAIL EROSION & SEDIMENT POLLUTION CONTROL PLAN
32	ES-STG2-DT-3	STAGE 2 DETAIL EROSION & SEDIMENT POLLUTION CONTROL PLAN
33	ES-STG3-OA	STAGE 3 OVERALL EROSION & SEDIMENT POLLUTION CONTROL PLAN
34	ES-STG3-DT-1	STAGE 3 DETAIL EROSION & SEDIMENT POLLUTION CONTROL PLAN
35	ES-STG3-DT-2	STAGE 3 DETAIL EROSION & SEDIMENT POLLUTION CONTROL PLAN
36	ES-STG3-DT-3	STAGE 3 DETAIL EROSION & SEDIMENT POLLUTION CONTROL PLAN
37	LI-OA	OVERALL LIGHTING PLAN
38	VT	VEHICLE TRACKING PLAN - AERIAL FIRE TRUCK
39	SAN-PR	SANITARY SEWER PROFILES
40	STM-PR-1	STORMWATER PIPE PROFILES
41	STM-PR-2	STORMWATER PIPE PROFILES
42	STM-PR-3	STORMWATER PIPE PROFILES
43	STM-CH	STORMWATER CHARTS
44	CD-1	CONSTRUCTION DETAILS - SITE
45	CD-2	CONSTRUCTION DETAILS - SITE
46	CD-3	CONSTRUCTION DETAILS - LIGHTING
47	CD-4	CONSTRUCTION DETAILS - WATER
48	CD-5	CONSTRUCTION DETAILS - SEWER
49	CD-6	STORMWATER NOTES & DETAILS
50	CD-7	STORMWATER NOTES & DETAILS
51	CD-8	STORMWATER NOTES & DETAILS
52	CD-9	STORMWATER NOTES & DETAILS
53	CD-10	E&S CONTROL NOTES & DETAILS
54	CD-11	E&S CONTROL NOTES & DETAILS
55	CD-12	E&S CONTROL NOTES & DETAILS
56	CD-13	E&S CONTROL NOTES & DETAILS
57-81		LANDSCAPING PLANS (DCI)

ESD PRACTICES SUMMARY TABLE

ESD PRACTICES SUMMARY TABLE

ESD PRACTICES (CHAPTER 5 - NON-STRUCTURAL & STRUCTURAL)

TYPE	NO.	DA TO STRUCTURE (SF)	IMPERVIOUS DA TO STRUCTURE (AC)	ESDv (CF)	Pe ADDRESSED (IN)
SHEETFLOW TO CONSERVATION AREA	SWM-6	24,176	0.43	2,238	1.00
MICRO-BIORETENTION	SWM-7	13,068	0.12	608	1.36
MICRO-BIORETENTION	SWM-8A	7,405	0.14	1,160	2.37
MICRO-BIORETENTION	SWM-8B	7,841	0.14	473	0.96
MICRO-BIORETENTION	SWM-9A	10,193	0.20	1,031	1.30
MICRO-BIORETENTION	SWM-9B	8,059	0.14	1,103	2.24
MICRO-BIORETENTION	SWM-10A	7,710	0.11	795	2.08
MICRO-BIORETENTION	SWM-10B	7,231	0.12	776	1.80
MICRO-BIORETENTION	SWM-10C	10,193	0.17	1,056	1.73
MICRO-BIORETENTION	SWM-10D	2,962	0.06	534	2.60
MICRO-BIORETENTION	SWM-12A	13,329	0.21	1,674	2.24
MICRO-BIORETENTION	SWM-12B	17,860	0.23	2,226	2.60
NON-ESD PRACTICES (CHAPTER 3 - STRUCTURAL PRACTICES)					
TYPE	NO.	DA TO STRUCTURE (SF)	IMPERVIOUS DA TO STRUCTURE (AC)	ESDv (CF)	Pe ADDRESSED (IN)
BIORETENTION	SWM-1	43,560	0.64	3,320	1.47
BIORETENTION	SWM-2A	29,185	0.31	1,283	1.12
BIORETENTION	SWM-2B	52,708	0.79	3,248	0.88
BIORETENTION	SWM-3	40,946	0.76	866	0.33
BIORETENTION	SWM-4	23,522	0.22	1,153	1.44
BIORETENTION	SWM-5	94,961	1.18	10,759	2.53
BIORETENTION	SWM-11	58,762	0.98	13,078	2.60
BIORETENTION	SWM-13	36,285	0.43	4,620	2.60

HRG
HERBERT, ROWLAND & GRUBIC, INC.
5 NORTH MAIN STREET
SUITE 3
CHAMBERSBURG, PA 17201
717. 263.2070 | hrg-inc.com

SITE PLAN FOR MERITUS SCHOOL OF OSTEOPATHIC MEDICINE GRADUATE STUDENT HOUSING
1500 MT. AETNA ROAD
HAGERSTOWN, MD 21742
TAX MAP-50 GRID: 14 PARCEL: 1207
HAGERSTOWN WASHINGTON COUNTY MARYLAND

PROFESSIONAL CERTIFICATION:

STATE OF MARYLAND SCOTT BERT 59144 PROFESSIONAL ENGINEER

I HEREBY CERTIFY THAT THESE DOCUMENTS WERE PREPARED OR APPROVED BY ME, AND THAT I AM DULY LICENSED PROFESSIONAL ENGINEER UNDER THE LAWS OF THE STATE OF MARYLAND. LICENSE NO. 59144, EXP. DATE: 2024-03-28

HRG PROJECT NUMBER:	R003887.0427
PLAN DATE:	2023.09.01
DRAWING SCALE:	AS SHOWN
PROJ. MANAGER:	SBB

REVISIONS

NO.	DATE	DESCRIPTION
1	2024.01.16	PER VARIOUS REVIEW AGENCY COMMENTS
2		
3		
4		
5		
6		
7		
8		
9		

SHEET TITLE:
COVER SHEET

SP-23-034

SHEET: CV

EXISTING LEGEND:

- Angle Iron
- Axle
- Drill Hole
- Hub
- Monument
- Nail
- Iron Pipe
- Iron Pin
- PK Nail
- Rail Road Spike
- Benchmark
- Stone Monument
- Tree Monument
- Railroad Track
- Municipal Boundaries
- Property Line
- Legal Right-of-Way Line
- Setback Line
- Zoning Boundaries
- CeA / ErB — Soil Boundaries
- Easement
- Floodplain
- 540 — Contour Major
- Contour Minor
- Stream Line
- x 540.3 — Ground Elevation
- Ditch Or Swale
- Shrub
- Coniferous Tree
- Deciduous Tree
- Tree/Brush Line
- Shrub Row
- Wetland Flag
- Road Centerline
- Curb
- Edge of Road
- Edge of Gravel
- Guide Rail
- X — Fence
- Fence Post
- Stone Wall
- Retaining Wall
- Field
- Sign
- Sign And Posts
- One-Sided Billboard
- Two-Sided Billboard
- Rail Road Sign
- Rail Road Crossing Gate
- Rail Road Signal Light
- Bollard
- Road Delineation Post
- FP — Flag Pole
- LP — Lamp Post
- PST — Post
- MB — Mailbox
- T — Above Ground Telephone Line
- TU — Underground Telephone Line
- DBT — Telephone - Direct Buried
- CTV — Above Ground Cable TV Line
- CTVU — Underground Cable TV Line
- T,CTV — Above Ground Telephone and Cable TV Line
- FO — Above Ground Fiber Optic Line
- FOU — Underground Fiber Optic Line
- C — Conduit
- Cable TV Pedestal
- Telephone Pedestal
- Tel. MH — Telephone Manhole
- Telephone Pole
- E — Above Ground Electric Line
- EU — Underground Electric Line
- DBE — Electric - Direct Buried
- E,T — Above Ground Electric and Telephone Line
- E,CTV — Above Ground Electric and Cable TV Line
- E,T,CTV — Above Ground Electric, Telephone and Cable TV Line
- Electrical Manhole
- Electric Pole
- Private Utility Pole
- Guy Pole
- Light Standard
- Guy Wire
- Electrical Box
- Traffic Signal Pole
- Control Box
- G — Gas Line
- P — Petroleum Pipeline
- Gas MH — Gas Manhole
- GV — Gas Valve
- GM — Gas Meter
- S — Sanitary Sewer Line
- FM — Forcemain Line
- 12" CMP — Storm Sewer Line
- San. MH — Sanitary Sewer Manhole
- CO — Cleanout
- Septic Tank
- Storm Sewer Inlet
- Storm MH — Storm Sewer Manhole
- Probe (passed)
- Probe (failed)
- Perc (passed)
- Perc (failed)
- W — Water Line
- Well
- WV — Water Valve
- FH — Fire Hydrant
- WM — Water Meter
- Water Spigot
- Monitoring Well

PROPOSED LEGEND:

- MONUMENT
- REBAR
- PROPERTY LINE
- EASEMENT
- REQUIRED RIGHT-OF-WAY LINE
- 1010 — CONTOUR
- X 410.00 — SPOT ELEVATION
- X BC 410.00 — BOTTOM OF CURB SPOT ELEVATION
- X TC 410.00 — TOP OF CURB SPOT ELEVATION
- X HP 410.00 — HIGH POINT SPOT ELEVATION
- X LP 410.00 — LOW POINT SPOT ELEVATION
- X TW 410.00 — TOP OF WALL SPOT ELEVATION
- X GR 410.00 — FINISHED GRADE AT WALL FACE SPOT ELEVATION
- DITCH OR SWALE
- BITUMINOUS WEDGE CURB
- CURB
- CONCRETE SIDEWALK
- ACCESSIBLE RAMP
- TYPE 2-S GUIDE RAIL
- 20 — PARKING SPACE QUANTITY TAG
- BUILDING ENTRANCE
- 2X — FENCE
- X — FENCE
- SIGN
- SIGN
- DOUBLE SIGN
- BOLLARD
- LIMIT OF DISTURBANCE
- TOPSOIL STOCKPILE
- RCE — ROCK CONSTRUCTION ENTRANCE
- ST — SEDIMENT TRAP
- RF — ROCK FILTER
- SF — SILT FENCE
- SF-18 — SILT FENCE - 18" HIGH
- SF-30 — SILT FENCE - 30" HIGH
- SSF — SUPER SILT FENCE
- SS — SILT SOXX
- SS-8 — SILT SOXX - 8"
- SS-12 — SILT SOXX - 12"
- SS-18 — SILT SOXX - 18"
- SS-24 — SILT SOXX - 24"
- INLET PROTECTION
- EROSION CONTROL BLANKET
- DRAINAGE BASIN
- INLET DRAINAGE BASIN
- CHANNEL FLOW
- T — ABOVE GROUND TELEPHONE LINE
- TU — UNDERGROUND TELEPHONE LINE
- DBT — TELEPHONE - DIRECT BURIED
- CTV — ABOVE GROUND CABLE TV LINE
- CTVU — UNDERGROUND CABLE TV LINE
- T,CTV — ABOVE GROUND TELEPHONE AND CABLE TV LINE
- FO — ABOVE GROUND FIBER OPTIC LINE
- FOU — UNDERGROUND FIBER OPTIC LINE
- C — CONDUIT
- CABLE TV PEDESTAL
- TELEPHONE PEDESTAL
- T — TELEPHONE MANHOLE
- TELEPHONE POLE
- E — ABOVE GROUND ELECTRIC LINE
- EU — UNDERGROUND ELECTRIC LINE
- DBE — ELECTRIC - DIRECT BURIED
- E,T — ABOVE GROUND ELECTRIC AND TELEPHONE LINE
- E,CTV — ABOVE GROUND ELECTRIC AND CABLE TV LINE
- E,T,CTV — ABOVE GROUND ELECTRIC, TELEPHONE AND CABLE TV LINE
- ELECTRIC POLE
- PRIVATE UTILITY POLE
- GUY POLE
- GUY WIRE
- E — ELECTRICAL BOX
- E — ELECTRICAL MANHOLE
- LIGHT STANDARD
- TRAFFIC SIGNAL POLE
- G — GAS LINE
- GV — GAS VALVE
- GM — GAS METER
- STORM SEWER & INLET
- UNDERGROUND DETENTION
- CMP — CORRUGATED METAL PIPE
- SLCPP — SMOOTH LINED CORRUGATED PLASTIC PIPE
- HDPE — HIGH DENSITY POLYETHYLENE
- RCP — REINFORCED CONCRETE PIPE
- PVC — POLYVINYL CHLORIDE
- DIP — DUCTILE IRON PIPE
- S — SANITARY LINE
- FM — FORCEMAIN LINE
- SANITARY/STORM MANHOLE
- CO — SANITARY CLEANOUT
- MONITORING WELL
- S — SEPTIC TANK
- W — WATER LINE
- WELL
- WV — WATER VALVE
- FH — FIRE HYDRANT
- WM — WATER METER
- WATER SPIGOT

SITE DATA

EXISTING ZONING DISTRICT: AND INDUSTRY	ORI – OFFICE, RESEARCH
PROPOSED USE: USE)	DORMITORIES (PERMITTED
AREAS:	
LOT AREA:	28.0276 AC. (1,220,882 SF)
EXISTING IMPERVIOUS AREA:	0% (0.08 AC.)
DISTURBED AREA:	52% (14.5 AC.)
PROPOSED IMPERVIOUS:	27% (7.6 AC.)
BUILDING COVERAGE:	6% (77,672 SF)
FOREST CONSERVATION EASEMENT AREAS:	
EXISTING AREA:	10.5744 AC.
AREA TO BE MITIGATED:	2.8310 AC.
REMAINING AREA:	7.434 AC.
MAX. BUILDING HEIGHT PROVIDED:	55 FT
TOTAL NO. OF DWELLING UNITS:	342
PHASE 1:	182
PHASE 2:	160
TOTAL NO. OF PARKING SPACES:	523
PHASE 1:	260 (16 EV & 11 ADA)
PHASE 2:	263 (10 EV & 1 ADA)
WATER AND SEWER SUPPLY:	PUBLIC BY CITY OF HAGERSTOWN
EXISTING WATER ALLOCATION:	32,565 GPD
PROPOSED WATER ALLOCATION:	34,200 GPD
EXISTING SEWER ALLOCATION:	23,792 GPD
PROPOSED SEWER ALLOCATION:	34,200 GPD
WATERSHED:	
NAME:	ANTIETAM CREEK
NUMBER:	02140502
ORI DISTRICT REQUIREMENTS	
LOT:	
MIN. AREA:	NO STANDARD
MIN. WIDTH:	NO STANDARD
MIN. FRONTAGE:	NO STANDARD
MAX DENSITY:	NO STANDARD
YARD SETBACKS:	
FRONT:	50'
SIDE:	25'
REAR:	25'
BUFFER YARD:	
FRONT, SIDE, REAR:	25'
SITE COVERAGE:	
MAX IMPERVIOUS:	80%
OFF STREET PARKING:	
SPACES PER DWELLING:	NO STANDARD
STRUCTURES:	
MAX HEIGHT:	100'
MIN. DISTANCE BETWEEN OPPOSING BLDGS:	NO STANDARD
MIN. DISTANCE BETWEEN BLDGS:	NO STANDARD

GENERAL NOTES

1. THIS SURVEY IS REFERENCED TO THE MARYLAND COORDINATE SYSTEM, NAD83/NSRS2007 AND NAVD88 BY VIRTUE OF WASHINGTON COUNTY SURVEY CONTROL STATIONS: EDGE, AND DAYSDAIR AZI.
2. TOPOGRAPHY AND CONTOURS SHOWN HEREON ARE BASED ON AERIAL MAPPING PROVIDED BY HANOVER LAND SERVICES, INC. ON MAY 17, 2023.
3. WETLANDS SHOWN HEREON WERE FIELD DELINEATED BY SKELLY AND LOY, INC. ON APRIL 20, 2023. TOTAL AREA OF WETLANDS IS 0.076 ACRES, MORE OR LESS.
4. THE LOCATIONS OF UTILITIES SHOWN HEREON ARE BASED ON ABOVE GROUND FEATURES, FIELD OBSERVATIONS/SURVEY, RECORD DRAWINGS RECEIVED FROM UTILITY COMPANIES, LOCATIONS OF UNDERGROUND UTILITIES/STRUCTURES MAY VARY FROM LOCATIONS SHOWN HEREON. ADDITIONAL BURIED UTILITIES/STRUCTURES MAY BE ENCOUNTERED. IT SHALL BE THE CONTRACTORS RESPONSIBILITY TO FIELD VERIFY THE EXACT LOCATION AND DEPTH OF ALL UTILITY LINES PRIOR TO START OF ANY CONSTRUCTION ACTIVITIES.
5. AN EIGHT (8) FOOT EASEMENT FOR ALL UTILITIES AND DRAINAGE IS DEDICATED ALONG THE INTERIOR OF ALL SIDE AND REAR LINES, A TEN (10) FOOT WIDE EASEMENT FOR UTILITIES AND DRAINAGE IS DEDICATED ALONG THE INTERIOR OF ALL FRONT LINES.
6. THE PROPERTIES ARE LOCATED WITHIN AN AREA HAVING A ZONE "X" DESIGNATION "AREA OF MINIMAL FLOOD HAZARD" BY THE FEDERAL EMERGENCY MANAGEMENT AGENCY (FEMA) ON THE FLOOD INSURANCE RATE MAP NUMBERS 24043C0302D, 24043C0306D, AND 24043C0139D.
7. SOILS DATA WAS TAKEN FROM THE UNITED STATES DEPARTMENT OF AGRICULTURE, NATURAL RESOURCES CONSERVATION SERVICE, WEB SOIL SURVEY. WWW.WEBSOILSURVEY.NRCS.USDA.GOV
8. THE WATERSHED DRAINAGE AREA ONTO THE PROPERTY IS LESS THAN 400 ACRES.
9. U.S. FISH AND WILDLIFE SERVICES INDICATED NO EFFECTS ON THE NORTHERN LONG-EARED BAT BUT DID INDICATE THE MONARCH BUTTERFLY AS A CANDIDATE SPECIES. BASED ON THE CURRENT DEVELOPMENT PLAN, NO SECTION 7 CONSULTATION IS REQUIRED. THERE WERE NO HITS FOR RARE, THREATENED AND ENDANGERED SPECIES AS DETERMINED BY MDNR. THIS INFORMATION IS IN ACCORDANCE WITH 50 CFR 17 AS REQUIRED TO BE SHOWN BY SECTION 307 OF THE WASHINGTON COUNTY SUBDIVISION ORDINANCE.
10. ALL GRADING FOR THIS PROJECT SHALL BE THE FULL RESPONSIBILITY OF THE PROPERTY OWNER.
11. THERE IS A 10' WIDE DRAINAGE AND UTILITIES EASEMENT ALONG ALL FRONT LOT LINES AND AN 8' WIDE DRAINAGE AND UTILITIES EASEMENT ALONG ALL SIDE AND REAR LOT LINES HEREBY RESERVED UNLESS OTHERWISE SHOWN HEREON.
12. A PUBLIC WORKS AGREEMENT AND PERFORMANCE SECURITY WILL BE REQUIRED FOR ALL IMPROVEMENTS WITHIN THE COUNTY RIGHT-OF-WAY THAT ARE NOT OTHERWISE REGULATED UNDER A UTILITY PERMIT OR ENTRANCE PERMIT.
13. A UTILITY PERMIT WILL BE REQUIRED FOR ANY PROPOSED UTILITY WORK LOCATED WITHIN THE COUNTY RIGHT-OF-WAY.
14. A COMPLETE SET OF APPROVED PLANS AND A COPY OF THE GRADING PERMIT MUST BE ON SITE AND AVAILABLE FOR USE BY THE INSPECTOR, OR OTHER REPRESENTATIVE OF WASHINGTON COUNTY DIVISION OF ENGINEERING & CONSTRUCTION.
15. PLEASE BE ADVISED THAT ANY PROJECT WHICH CREATES A DISTURBANCE OF ONE (1) ACRE OR MORE WILL REQUIRE A NOTICE OF INTENT TO COMPLY WITH THE GENERAL PERMIT FOR STORM WATER DISCHARGES ASSOCIATED WITH CONSTRUCTION ACTIVITY (NOI). THE NOI IS REQUIRED UNDER THE CLEAN WATER ACT AS STATED IN 40 CFR 122.26 AND CODE OF MARYLAND REGULATIONS COMAR 26.08.04.09A AND IS REGULATED BY THE MARYLAND DEPARTMENT OF ENVIRONMENT (MDE). THE NOI IS TO BE SUBMITTED WITH THE APPROPRIATE FEES DIRECTLY TO THE MDE PRIOR TO COMMENCEMENT OF CONSTRUCTION ACTIVITY. NO LAND DISTURBING ACTIVITY THAT REQUIRES A GRADING PERMIT FROM WASHINGTON COUNTY SHOULD PROCEED UNTIL THE GENERAL PERMIT FOR STORM WATER DISCHARGES ASSOCIATED WITH CONSTRUCTION ACTIVITY (MDR10) HAS BEEN ISSUED BY MDE.
16. NO PERMANENT STRUCTURES (FENCES, SHEDS, PLAY EQUIPMENT, RETAINING WALLS, ETC.) SHALL BE PERMITTED WITHIN ANY STORM DRAINAGE EASEMENT EITHER SHOWN OR DESCRIBED ON THE FINAL PLAT OF SUBDIVISION.
17. DEVELOPER/CONTRACTOR MUST CONTACT THE CERTIFYING ENGINEER AND THE COUNTY AT LEAST 5 DAYS PRIOR TO THE START OF CONSTRUCTION OF THE STORM WATER MANAGEMENT SYSTEM TO SCHEDULE AND COORDINATE INSPECTION TIME TABLES.
18. IN CONFORMANCE WITH THE STORM WATER MANAGEMENT ORDINANCE OF WASHINGTON COUNTY, A PERFORMANCE SECURITY AND EXECUTED MAINTENANCE AND ACCESS AGREEMENT SHALL BE REQUIRED FROM THE DEVELOPER PRIOR TO ISSUANCE OF ANY BUILDING OR GRADING PERMIT FOR CONSTRUCTION PER THESE PLANS.
19. THIS PROJECT WILL REQUIRE A THIRD-PARTY QUALIFIED PROFESSIONAL TO BE PRESENT AT THE PRE-CONSTRUCTION MEETING SCHEDULED WITH WASHINGTON COUNTY DIVISION OF CONSTRUCTION AND THE WASHINGTON COUNTY SOIL CONSERVATION DISTRICT. CONSTRUCTION INSPECTION WILL BE REQUIRED FOR THIS PROJECT PER THE "ROADWAY AND STORMWATER MANAGEMENT CONSTRUCTION VERIFICATION PROCEDURES" DATED OCTOBER 17, 2008.
20. ALL PROPOSED RETAINING WALLS OVER THREE FEET HIGH REQUIRES A BUILDING PERMIT AND SHALL BE DESIGNED ACCORDING TO THE APPLICABLE BUILDING CODE AND/OR AASHTO STANDARD, AND SHALL BE APPROVED PRIOR TO CONSTRUCTION, BY THE WASHINGTON COUNTY PERMITS AND INSPECTIONS.
21. IF ROCK IS ENCOUNTERED, UNDERCUT SWM BMP AREA 18" AND BACKFILL WITH CL TYPE SOIL OR APPROVED EQUIVALENT PER GEOTECHNICAL REPORT.
22. PIPE SHALL BE PLACED ON MIN. 95% COMPACTED FILL ACCORDING TO AASHTO T-180A STANDARD OR ACCORDING TO THE RECOMMENDATIONS IN THE GEOTECH REPORT.
23. ALL STORM PIPING SHALL BE AS FOLLOWS UNLESS OTHERWISE NOTED:

    TYPE 1: HIGH DENSITY POLYETHYLENE PIPE, (SLCPP) SMOOTH INTERIOR - WHERE SPECIFIED, AASHTO DESIGNATION M252 AND M294. PIPE SHALL BE INSTALLED IN ACCORDANCE WITH PIPE MANUFACTURER'S GUIDELINES FOR CULVERT STORM DRAINAGE APPLICATION.

23. ANY ENTRANCES ON MT AETNA RD, INCLUDING TEMPORARY ONES, WILL REQUIRE A WASHINGTON COUNTY ENTRANCE PERMIT PRIOR TO CONSTRUCTION.

MARYLAND MISS UTILITY

UNDERGROUND UTILITIES HAVE BEEN PLOTTED FROM PLAN AND MARKINGS AND WILL BE COMBINED WITH OBSERVED EVIDENCE OF UTILITIES TO DEVELOP A VIEW OF THOSE UNDERGROUND UTILITIES. OTHER UNDERGROUND UTILITIES MAY EXIST WHICH ARE NOT SHOWN AS A RESULT OF INFORMATION NOT BEING PROVIDED BY THE UTILITY OWNER. HOWEVER, LACKING EXCAVATION, THE EXACT LOCATION OF UNDERGROUND FEATURES CANNOT BE ACCURATELY, COMPLETELY, AND RELIABLY DEPICTED. WHERE ADDITIONAL OR MORE DETAILED INFORMATION IS REQUIRED, THE CLIENT OR CONTRACTOR IS ADVISED THAT EXCAVATION MAY BE NECESSARY. MISS UTILITY TICKET NO'S. 23333728, 23333753, 23333754, 23333755, 23333756, AND 23333757 HAS BEEN ASSIGNED TO THIS PROJECT ON 05/11/2023.

HRG
HERBERT, ROWLAND & GRUBIC, INC.
5 NORTH MAIN STREET
SUITE 3
CHAMBERSBURG, PA 17201
717. 263.2070 | hrg-inc.com

SITE PLAN
FOR
MERITUS SCHOOL OF OSTEOPATHIC MEDICINE
GRADUATE STUDENT HOUSING
1500 MT. AETNA ROAD
HAGERSTOWN, MD 21742
TAX MAP-50 GRID: 14 / PARCEL: 1297
HAGERSTOWN WASHINGTON COUNTY MARYLAND

PROFESSIONAL CERTIFICATION:

STATE OF MARYLAND — SCOTT BERG — 59144 — PROFESSIONAL ENGINEER

I HEREBY CERTIFY THAT THESE DOCUMENTS WERE PREPARED OR APPROVED BY ME, AND THAT I AM DULY LICENSED PROFESSIONAL ENGINEER UNDER THE LAWS OF THE STATE OF MARYLAND. LICENSE NO. 59144, EXP. DATE: 2024-03-26

HRG PROJECT NUMBER:	R003887.0427
PLAN DATE:	2023.09.01
DRAWING SCALE:	AS SHOWN
PROJ. MANAGER:	SBB

REVISIONS

NO.	DATE	DESCRIPTION
1	2024.01.16	PER VARIOUS REVIEW AGENCY COMMENTS
2		
3		
4		
5		
6		
7		
8		
9		

SHEET TITLE:
GENERAL NOTES

SP-23-034

SHEET: NT

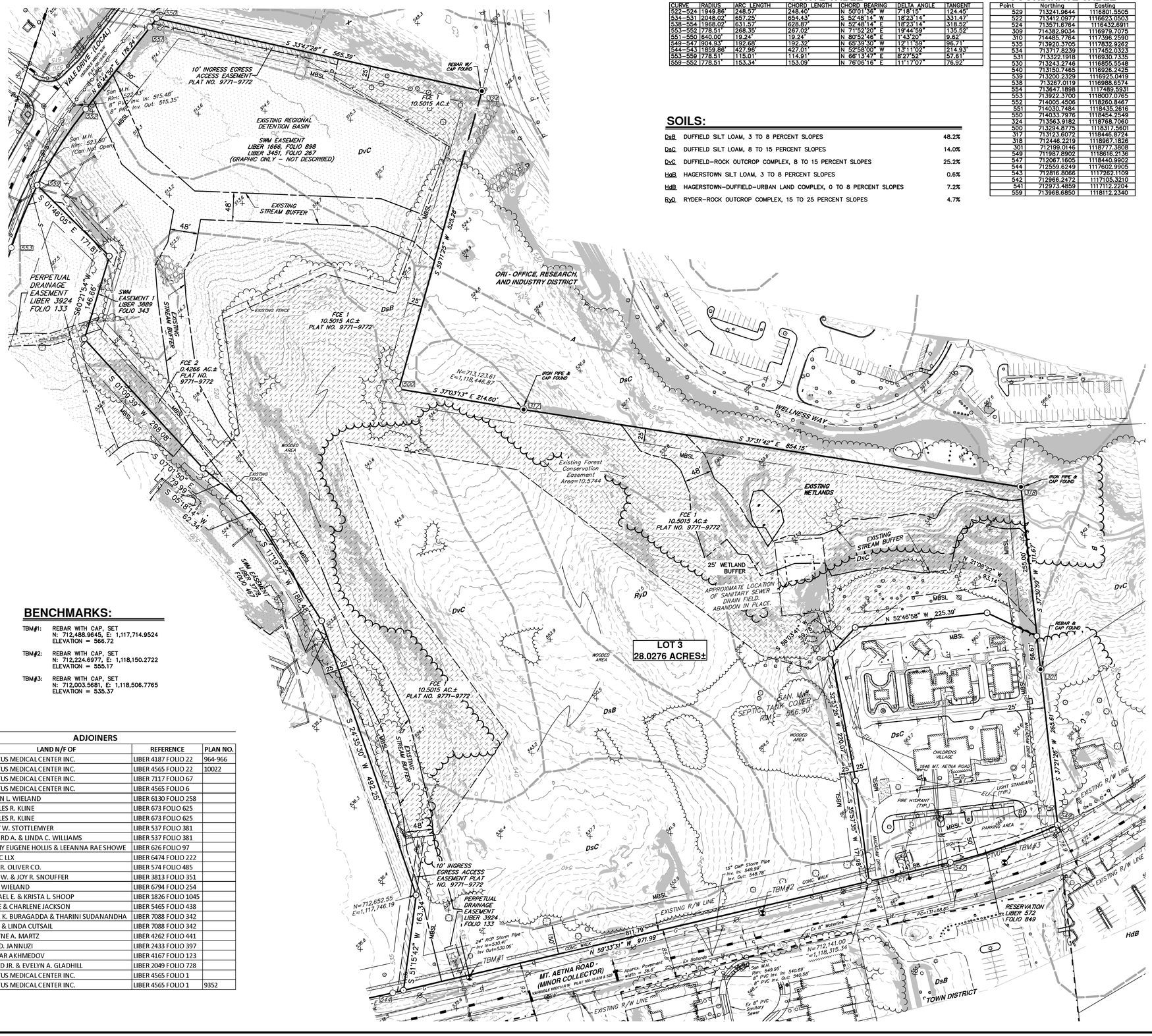

CURVE TABLE

CURVE	RADIUS	ARC LENGTH	CHORD LENGTH	CHORD BEARING	DELTA ANGLE	TANGENT
522-524	1949.86'	248.57'	248.40'	N 50°01'36" W	7°18'15"	124.45'
534-531	2048.02'	657.25'	654.43'	S 52°48'14" W	18°23'14"	331.47'
538-554	1968.02'	631.57'	628.87'	N 52°48'14" E	18°23'14"	318.52'
553-552	778.51'	268.35'	267.02'	N 71°52'20" E	19°44'59"	135.52'
551-550	640.00'	19.24'	19.24'	N 80°52'46" E	1°43'20"	9.62'
549-547	904.93'	192.68'	192.32'	N 65°39'30" W	12°11'59"	96.71'
544-543	1859.86'	427.96'	427.01'	N 52°58'00" W	13°11'02"	214.93'
553-559	778.51'	115.01'	114.91'	N 66°13'47" E	8°27'52"	57.61'
559-552	778.51'	153.34'	153.09'	N 76°06'16" E	11°17'07"	76.92'

COORDINATE TABLE

Point	Northing	Easting
529	713241.9644	1116801.5505
522	713412.0977	1116623.0503
524	713571.6764	1116432.6911
309	714382.9034	1116979.7075
310	714485.7764	1117398.2590
535	713920.3705	1117832.9262
534	713717.8239	1117452.0323
531	713322.1918	1116930.7335
530	713243.2746	1116855.5548
540	713150.7465	1116928.2425
539	713200.2329	1116925.0419
538	713287.0119	1116988.6574
554	713647.1898	1117489.5931
553	713922.3700	1118007.0765
552	714005.4506	1118260.8467
551	714030.7484	1118435.2616
550	714033.7976	1118454.2549
324	713363.9182	1118768.7060
500	713294.8775	1118317.5601
317	713123.6072	1118446.8724
318	712446.2219	1118967.1826
301	712199.0146	1118777.3808
549	711987.8902	1118616.2136
547	712067.1605	1118440.9902
544	712559.6249	1117602.9905
543	712816.8066	1117262.1109
542	712966.2472	1117105.3210
541	712973.4859	1117112.2204
559	713968.6850	1118112.2340

SOILS:

DsB	DUFFIELD SILT LOAM, 3 TO 8 PERCENT SLOPES	48.2%
DsC	DUFFIELD SILT LOAM, 8 TO 15 PERCENT SLOPES	14.0%
DvC	DUFFIELD-ROCK OUTCROP COMPLEX, 8 TO 15 PERCENT SLOPES	25.2%
HaB	HAGERSTOWN SILT LOAM, 3 TO 8 PERCENT SLOPES	0.6%
HdB	HAGERSTOWN-DUFFIELD-URBAN LAND COMPLEX, 0 TO 8 PERCENT SLOPES	7.2%
RyD	RYDER-ROCK OUTCROP COMPLEX, 15 TO 25 PERCENT SLOPES	4.7%

BENCHMARKS:

TBM#1: REBAR WITH CAP, SET
N: 712,488.9645, E: 1,117,714.9524
ELEVATION = 566.72

TBM#2: REBAR WITH CAP, SET
N: 712,224.6977, E: 1,118,150.2722
ELEVATION = 555.17

TBM#3: REBAR WITH CAP, SET
N: 712,003.5681, E: 1,118,506.7765
ELEVATION = 535.37

ADJOINERS

PARCEL	LAND N/F OF	REFERENCE	PLAN NO.
A	MERITUS MEDICAL CENTER INC.	LIBER 4187 FOLIO 22	964-966
B	MERITUS MEDICAL CENTER INC.	LIBER 4565 FOLIO 22	10022
C	MERITUS MEDICAL CENTER INC.	LIBER 7117 FOLIO 67	
D	MERITUS MEDICAL CENTER INC.	LIBER 4565 FOLIO 6	
E	AARON L. WIELAND	LIBER 6130 FOLIO 258	
F	CHARLES R. KLINE	LIBER 673 FOLIO 625	
G	CHARLES R. KLINE	LIBER 673 FOLIO 625	
H	LARRY W. STOTTLEMYER	LIBER 537 FOLIO 381	
I	RICHARD A. & LINDA C. WILLIAMS	LIBER 537 FOLIO 381	
J	JEREMY EUGENE HOLLIS & LEEANNA RAE SHOWE	LIBER 626 FOLIO 97	
K	WAIZC LLX	LIBER 6474 FOLIO 222	
L	JOHN R. OLIVER CO.	LIBER 574 FOLIO 485	
M	TODD W. & JOY R. SNOUFFER	LIBER 3813 FOLIO 351	
N	BERYL WIELAND	LIBER 6794 FOLIO 254	
O	MICHAEL E. & KRISTA L. SHOOP	LIBER 1826 FOLIO 1045	
P	BRUCE & CHARLENE JACKSON	LIBER 5465 FOLIO 438	
Q	RAMA K. BURAGADDA & THARINI SUDANANDHA	LIBER 7088 FOLIO 342	
R	LEWIS & LINDA CUTSAIL	LIBER 7088 FOLIO 342	
S	DWAYNE A. MARTZ	LIBER 4262 FOLIO 441	
T	JULIE D. JANNUZI	LIBER 2433 FOLIO 397	
U	ILIMDAR AKHMEDOV	LIBER 4167 FOLIO 123	
V	JOHN D JR. & EVELYN A. GLADHILL	LIBER 2049 FOLIO 728	
W	MERITUS MEDICAL CENTER INC.	LIBER 4565 FOLIO 1	
X	MERITUS MEDICAL CENTER INC.	LIBER 4565 FOLIO 1	9352

GRAPHIC SCALE
80' 40' 0' 80'
SCALE: 1" = 80'

LEGEND

- Monument
- Property Corner
- Iron Pipe
- Iron Pin
- Benchmark
- Property Line
- Legal Right-of-Way Line
- Setback Line
- Zoning Boundaries
- CeA — Soil Boundaries
- ErB — Floodplain
- 540 — Existing Contour Major
- Existing Contour Minor
- 540 — Lot A Design Contour Major
- Lot A Design Contour Minor
- Existing Stream Line
- x 540.3 — Existing Ground Elevation
- Existing Shrub
- Existing Coniferous Tree
- Existing Deciduous Tree
- Tree/Brush Line
- Shrub Row
- Existing Edge of Road
- Existing Edge of Gravel
- Existing Guide Rail
- X — Existing Fence
- Existing Fence Post
- Existing Sign
- FP — Existing Flag Pole
- LP — Existing Lamp Post
- MB — Existing Mailbox
- T — Existing Above Ground Telephone Line
- T,CTV — Existing Above Ground Telephone and Cable TV Line
- Existing Utility Pole
- E,T — Existing Above Ground Electric and Telephone Line
- E — Existing Above Ground Electric Line
- E,CTV — Existing Above Ground Electric and Cable TV Line
- E,T,CTV — Existing Above Ground Electric, Telephone and Cable TV Line
- Existing Guy Wire
- E — Existing Electrical Box
- G — Existing Gas Line
- S — Existing Sanitary Sewer Line
- 12" CMP — Existing Storm Sewer Line
- San. MH — Existing Sanitary Sewer Manhole
- CO — Existing Cleanout
- W — Existing Water Line
- WV — Existing Water Valve
- FH — Existing Fire Hydrant
- WM — Existing Water Meter
- >25% Slopes

HRG
HERBERT, ROWLAND & GRUBIC, INC.
5 NORTH MAIN STREET
SUITE 3
CHAMBERSBURG, PA 17201
717. 263.2070 | hrg-inc.com

SITE PLAN FOR MERITUS SCHOOL OF OSTEOPATHIC MEDICINE GRADUATE STUDENT HOUSING

1500 MT. AETNA ROAD
HAGERSTOWN, MD 21742
TAX MAP-50 GRID: 14 PARCEL: 1207
HAGERSTOWN WASHINGTON COUNTY MARYLAND

PROFESSIONAL CERTIFICATION:

STATE OF MARYLAND — SCOTT BEST — 59144 — PROFESSIONAL ENGINEER

I HEREBY CERTIFY THAT THESE DOCUMENTS WERE PREPARED OR APPROVED BY ME, AND THAT I AM DULY LICENSED PROFESSIONAL ENGINEER UNDER THE LAWS OF THE STATE OF MARYLAND. LICENSE NO. 59144, EXP. DATE: 2024-03-26

HRG PROJECT NUMBER:	R003887.0427
PLAN DATE:	2023.09.01
DRAWING SCALE:	AS SHOWN
PROJ. MANAGER:	SBB

REVISIONS

NO.	DATE	DESCRIPTION
1	2024.01.16	PER VARIOUS REVIEW AGENCY COMMENTS
2		
3		
4		
5		
6		
7		
8		
9		

SHEET TITLE:
EXISTING CONDITIONS PLAN

SP-23-034

SHEET: EC

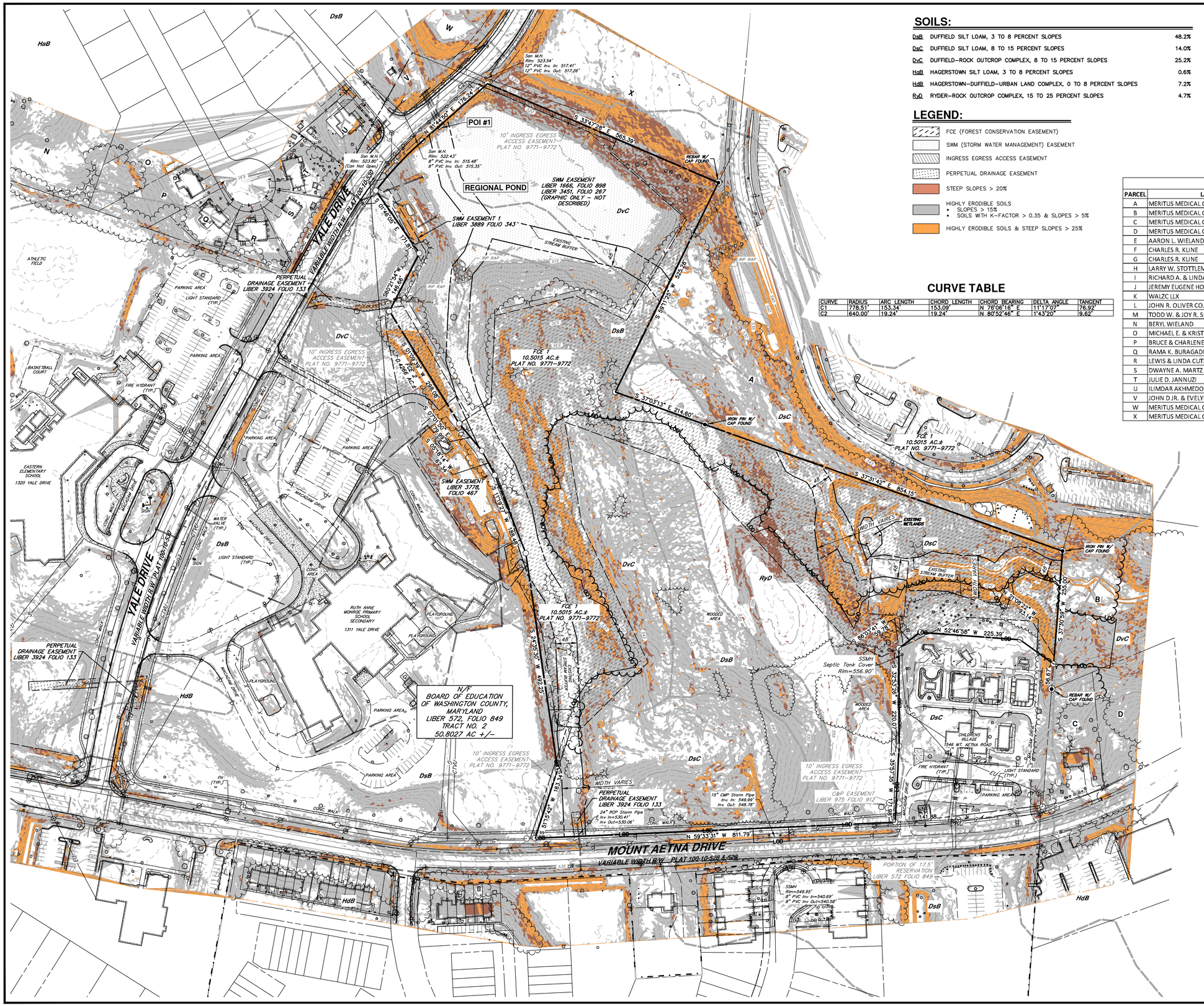

SOILS:

DsB	DUFFIELD SILT LOAM, 3 TO 8 PERCENT SLOPES	48.2%
DsC	DUFFIELD SILT LOAM, 8 TO 15 PERCENT SLOPES	14.0%
DvC	DUFFIELD-ROCK OUTCROP COMPLEX, 8 TO 15 PERCENT SLOPES	25.2%
HdB	HAGERSTOWN SILT LOAM, 3 TO 8 PERCENT SLOPES	0.6%
HdB	HAGERSTOWN-DUFFIELD-URBAN LAND COMPLEX, 0 TO 8 PERCENT SLOPES	7.2%
RyD	RYDER-ROCK OUTCROP COMPLEX, 15 TO 25 PERCENT SLOPES	4.7%

LEGEND:

- FCE (FOREST CONSERVATION EASEMENT)
- SWM (STORM WATER MANAGEMENT) EASEMENT
- INGRESS EGRESS ACCESS EASEMENT
- PERPETUAL DRAINAGE EASEMENT
- STEEP SLOPES > 20%
- HIGHLY ERODIBLE SOILS
  - SLOPES > 15%
  - SOILS WITH K-FACTOR > 0.35 & SLOPES > 5%
- HIGHLY ERODIBLE SOILS & STEEP SLOPES > 25%

GRAPHIC SCALE

100' 50' 0' 100'

SCALE: 1"=100'

CURVE TABLE

CURVE	RADIUS	ARC LENGTH	CHORD LENGTH	CHORD BEARING	DELTA ANGLE	TANGENT
C1	778.51'	153.34'	153.09'	N 76°06'16" E	11°17'07"	76.92'
C2	640.00'	19.24'	19.24'	N 80°52'46" E	1°43'20"	9.62'

ADJOINERS

PARCEL	LAND N/F OF	REFERENCE	PLAN NO.
A	MERITUS MEDICAL CENTER INC.	LIBER 4187 FOLIO 22	964-966
B	MERITUS MEDICAL CENTER INC.	LIBER 4565 FOLIO 22	10022
C	MERITUS MEDICAL CENTER INC.	LIBER 7117 FOLIO 67	
D	MERITUS MEDICAL CENTER INC.	LIBER 4565 FOLIO 6	
E	AARON L. WIELAND	LIBER 6130 FOLIO 258	
F	CHARLES R. KLINE	LIBER 673 FOLIO 625	
G	CHARLES R. KLINE	LIBER 673 FOLIO 625	
H	LARRY W. STOTTLEMYER	LIBER 537 FOLIO 381	
I	RICHARD A. & LINDA C. WILLIAMS	LIBER 537 FOLIO 381	
J	JEREMY EUGENE HOLLIS & LEEANNA RAE SHOWE	LIBER 626 FOLIO 97	
K	WALZC LLX	LIBER 6474 FOLIO 222	
L	JOHN R. OLIVER CO.	LIBER 574 FOLIO 485	
M	TODD W. & JOY R. SNOUFFER	LIBER 3813 FOLIO 351	
N	BERYL WIELAND	LIBER 6794 FOLIO 254	
O	MICHAEL E. & KRISTA L. SHOOP	LIBER 1826 FOLIO 1045	
P	BRUCE & CHARLENE JACKSON	LIBER 5465 FOLIO 438	
Q	RAMA K. BURAGADDA & THARINI SUDANANDHA	LIBER 7088 FOLIO 342	
R	LEWIS & LINDA CUTSAIL	LIBER 7088 FOLIO 342	
S	DWAYNE A. MARTZ	LIBER 4262 FOLIO 441	
T	JULIE D. JANNUZI	LIBER 2433 FOLIO 397	
U	ILIMDAR AKHMEDOV	LIBER 4167 FOLIO 123	
V	JOHN D JR. & EVELYN A. GLADHILL	LIBER 2049 FOLIO 728	
W	MERITUS MEDICAL CENTER INC.	LIBER 4565 FOLIO 1	
X	MERITUS MEDICAL CENTER INC.	LIBER 4565 FOLIO 1	9352

HRG

HERBERT, ROWLAND & GRUBIC, INC.
5 NORTH MAIN STREET
SUITE 3
CHAMBERSBURG, PA 17201
717. 263.2070 | hrg-inc.com

SITE PLAN
FOR
MERITUS SCHOOL OF OSTEOPATHIC MEDICINE GRADUATE STUDENT HOUSING

1500 MT. AETNA ROAD
HAGERSTOWN, MD 21742
TAX MAP: 42 GRID: 14 PARCEL: 1242
HAGERSTOWN WASHINGTON COUNTY MARYLAND

PROFESSIONAL CERTIFICATION:

STATE OF MARYLAND
SCOTT BERG
5914A
PROFESSIONAL ENGINEER

I HEREBY CERTIFY THAT THESE DOCUMENTS WERE PREPARED OR APPROVED BY ME, AND THAT I AM DULY LICENSED PROFESSIONAL ENGINEER UNDER THE LAWS OF THE STATE OF MARYLAND. LICENSE NO. 59144, EXP. DATE: 2023-03-28

HRG PROJECT NUMBER:	R003887.0427
PLAN DATE:	2023.09.01
DRAWING SCALE:	AS SHOWN
PROJ. MANAGER:	SBB

REVISIONS

NO.	DATE	DESCRIPTION
1	2024.01.16	PER VARIOUS REVIEW AGENCY COMMENTS
2		
3		
4		
5		
6		
7		
8		
9		

SHEET TITLE:

SENSITIVE RESOURCES PLAN

SP-23-034

SHEET: SR

LEGEND

- Monument
- Property Corner
- Iron Pipe
- Iron Pin
- Benchmark
- Property Line
- Legal Right-of-Way Line
- Setback Line
- Zoning Boundaries
- 540 — Existing Contour Major
- Existing Contour Minor
- Existing Shrub
- Existing Coniferous Tree
- Existing Deciduous Tree
- Tree/Brush Line
- Shrub Row
- Existing Edge of Road
- Existing Edge of Gravel
- Existing Guide Rail
- X — Existing Fence
- Existing Fence Post
- Existing Sign
- FP — Existing Flag Pole
- LP — Existing Lamp Post
- MB — Existing Mailbox
- T — Existing Above Ground Telephone Line
- T,CTV — Existing Above Ground Telephone and Cable TV Line
- Existing Utility Pole
- E,T — Existing Above Ground Electric and Telephone Line
- E — Existing Above Ground Electric Line
- E,CTV — Existing Above Ground Electric and Cable TV Line
- E,T,CTV — Existing Above Ground Electric, Telephone and Cable TV Line
- Existing Guy Wire
- E — Existing Electrical Box
- G — Existing Gas Line
- S — Existing Sanitary Sewer Line
- XX" CMP — Existing Storm Sewer Line
- S San. MH — Existing Sanitary Sewer Manhole
- CO — Existing Cleanout
- W — Existing Water Line
- WV — Existing Water Valve
- FH — Existing Fire Hydrant
- WM — Existing Water Meter
- LIMIT OF TREES TO BE REMOVED

HRG
HERBERT, ROWLAND & GRUBIC, INC.
5 NORTH MAIN STREET
SUITE 3
CHAMBERSBURG, PA 17201
717. 263.2070 | hrg-inc.com

SITE PLAN
FOR
MERITUS SCHOOL OF OSTEOPATHIC MEDICINE GRADUATE STUDENT HOUSING

1500 MT. AETNA ROAD
HAGERSTOWN, MD 21742
TAX MAP: 50 GRID: 14 PARCEL: 1207
HAGERSTOWN WASHINGTON COUNTY MARYLAND

PROFESSIONAL CERTIFICATION:

STATE OF MARYLAND
SCOTT BERG
5914A
PROFESSIONAL ENGINEER

I HEREBY CERTIFY THAT THESE DOCUMENTS WERE PREPARED OR APPROVED BY ME, AND THAT I AM A DULY LICENSED PROFESSIONAL ENGINEER UNDER THE LAWS OF THE STATE OF MARYLAND. LICENSE NO. 5914A, EXP. DATE: 2024-03-26

HRG PROJECT NUMBER:	R003887.0427
PLAN DATE:	2023.09.01
DRAWING SCALE:	AS SHOWN
PROJ. MANAGER:	SBB

REVISIONS

NO.	DATE	DESCRIPTION
1	2024.01.16	PER VARIOUS REVIEW AGENCY COMMENTS
2		
3		
4		
5		
6		
7		
8		
9		

SHEET TITLE:
DEMOLITION PLAN

SP-23-034

SHEET: DM

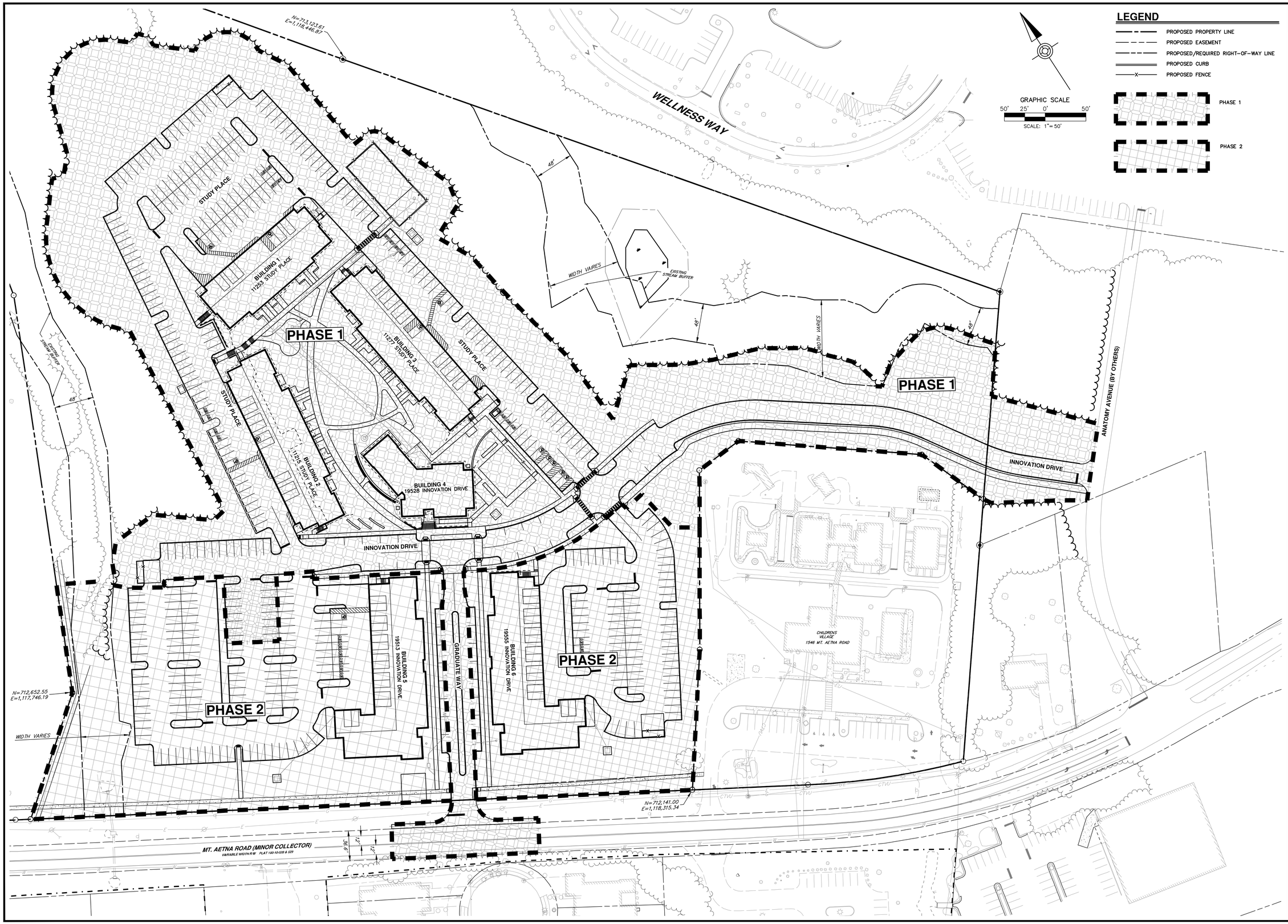

HERBERT, ROWLAND & GRUBIC, INC.
5 NORTH MAIN STREET
SUITE 3
CHAMBERSBURG, PA 17201
717. 263.2070 | hrg-inc.com

SITE PLAN
FOR
MERITUS SCHOOL OF OSTEOPATHIC MEDICINE GRADUATE STUDENT HOUSING

1500 MT. AETNA ROAD
HAGERSTOWN, MD 21742
TAX MAP: 50 GRID: 14 PARCEL: 1207
HAGERSTOWN WASHINGTON COUNTY MARYLAND

PROFESSIONAL CERTIFICATION:

STATE OF MARYLAND
SCOTT BERG
59144
PROFESSIONAL ENGINEER

I HEREBY CERTIFY THAT THESE DOCUMENTS WERE PREPARED OR APPROVED BY ME, AND THAT I AM DULY LICENSED PROFESSIONAL ENGINEER UNDER THE LAWS OF THE STATE OF MARYLAND. LICENSE NO. 59144, EXP. DATE: 2024-03-28

HRG PROJECT NUMBER:	R003887.0427
PLAN DATE:	2023.09.01
DRAWING SCALE:	AS SHOWN
PROJ. MANAGER:	SBB

REVISIONS

NO.	DATE	DESCRIPTION
1	2024.01.16	PER VARIOUS REVIEW AGENCY COMMENTS
2		
3		
4		
5		
6		
7		
8		
9		

SHEET TITLE:
PHASING PLAN

SP-23-034

SHEET: PH

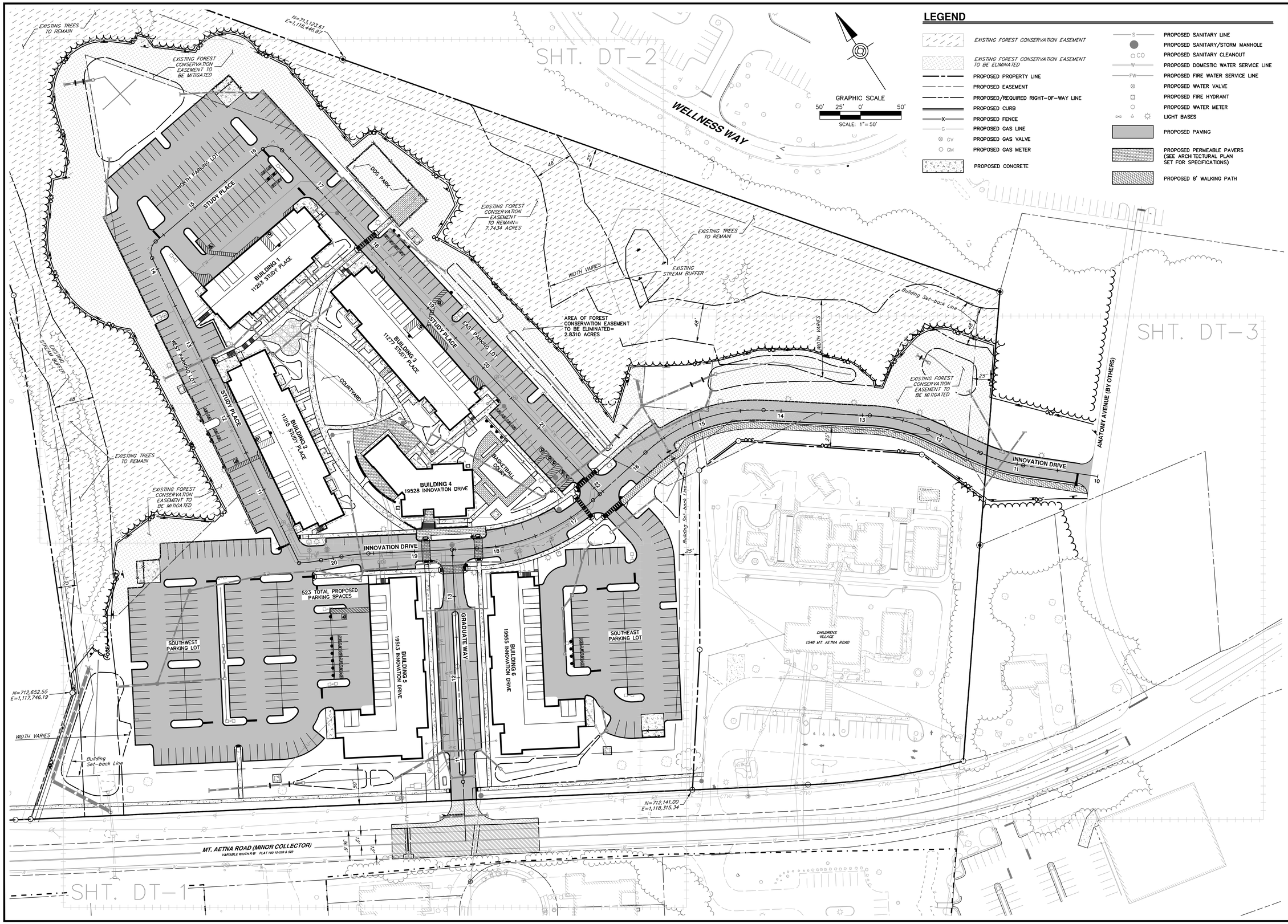

HRG
HERBERT, ROWLAND & GRUBIC, INC.
5 NORTH MAIN STREET
SUITE 3
CHAMBERSBURG, PA 17201
717. 263.2070 | hrg-inc.com

SITE PLAN
FOR
MERITUS SCHOOL OF OSTEOPATHIC MEDICINE GRADUATE STUDENT HOUSING

1500 MT. AETNA ROAD
HAGERSTOWN, MD 21742
TAX MAP-50 GRID: 14 | PARCEL: 1207
HAGERSTOWN WASHINGTON COUNTY MARYLAND

PROFESSIONAL CERTIFICATION:

STATE OF MARYLAND
SCOTT BERG
59144
PROFESSIONAL ENGINEER

I HEREBY CERTIFY THAT THESE DOCUMENTS WERE PREPARED OR APPROVED BY ME, AND THAT I AM DULY LICENSED PROFESSIONAL ENGINEER UNDER THE LAWS OF THE STATE OF MARYLAND. LICENSE NO. 59144, EXP. DATE: 2024-03-28

HRG PROJECT NUMBER:	R003887.0427
PLAN DATE:	2023.09.01
DRAWING SCALE:	AS SHOWN
PROJ. MANAGER:	SBB

REVISIONS

NO.	DATE	DESCRIPTION
1	2024.01.16	PER VARIOUS REVIEW AGENCY COMMENTS
2		
3		
4		
5		
6		
7		
8		
9		

SHEET TITLE:
OVERALL SITE AND DIMENSION PLAN

SP-23-034

SHEET: SI-OA

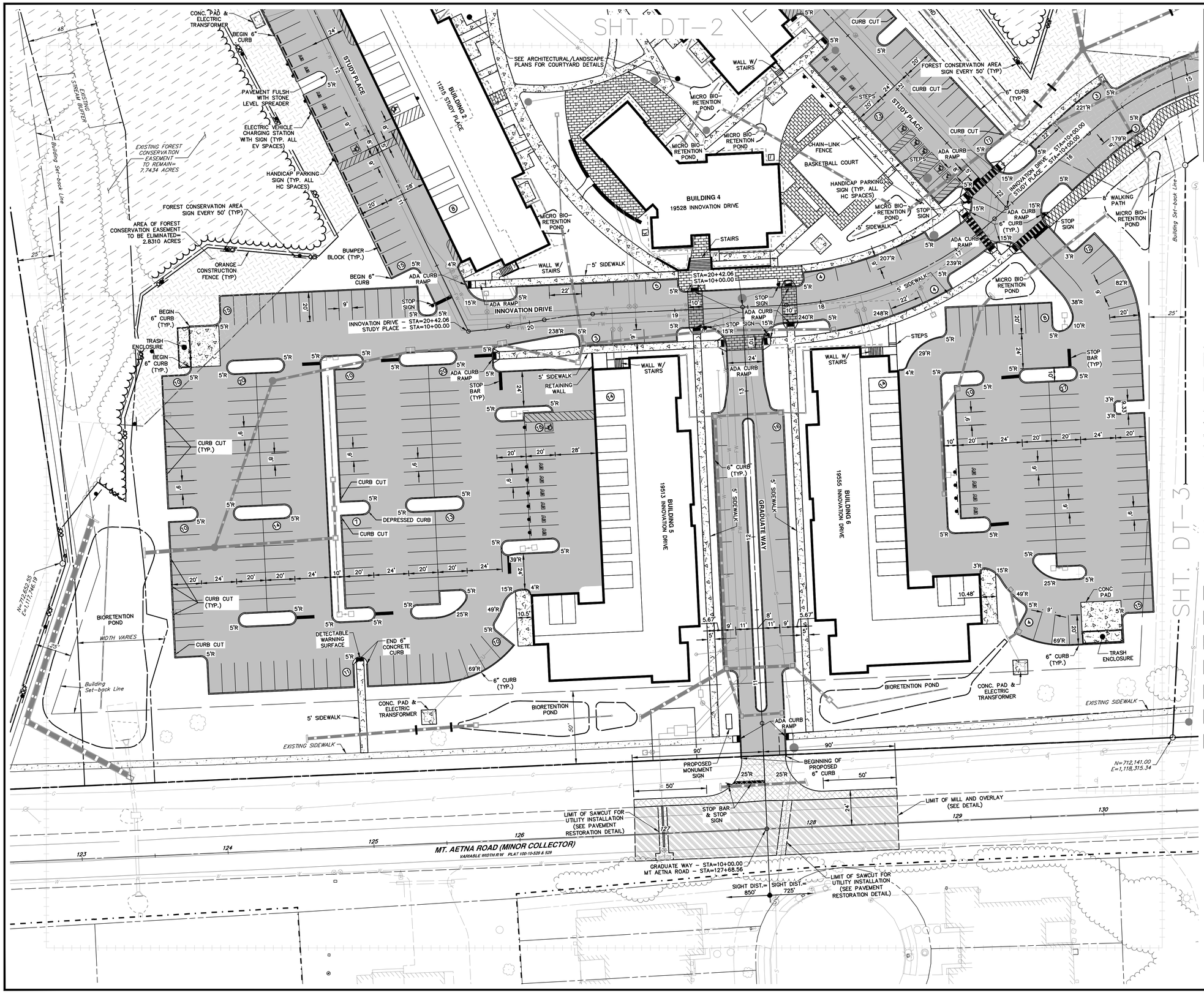

HRG
HERBERT, ROWLAND & GRUBIC, INC.
5 NORTH MAIN STREET
SUITE 3
CHAMBERSBURG, PA 17201
717. 263.2070 | hrg-inc.com

SITE PLAN
FOR
MERITUS SCHOOL OF OSTEOPATHIC MEDICINE GRADUATE STUDENT HOUSING

1500 MT. AETNA ROAD
HAGERSTOWN, MD 21742
TAX MAP-50 GRID: 14 PARCEL: 1207
HAGERSTOWN WASHINGTON COUNTY MARYLAND

PROFESSIONAL CERTIFICATION:

STATE OF MARYLAND
SCOTT BERG
59144
PROFESSIONAL ENGINEER

I HEREBY CERTIFY THAT THESE DOCUMENTS WERE PREPARED OR APPROVED BY ME, AND THAT I AM DULY LICENSED PROFESSIONAL ENGINEER UNDER THE LAWS OF THE STATE OF MARYLAND. LICENSE NO. 59144, EXP. DATE: 2024-03-30

HRG PROJECT NUMBER:	R003887.0427
PLAN DATE:	2023.09.01
DRAWING SCALE:	AS SHOWN
PROJ. MANAGER:	SBB

REVISIONS

NO.	DATE	DESCRIPTION
1	2024.01.16	PER VARIOUS REVIEW AGENCY COMMENTS
2		
3		
4		
5		
6		
7		
8		
9		

SHEET TITLE:
DETAIL SITE AND DIMENSION PLAN

SP-23-034

SHEET:
SI-DT-2

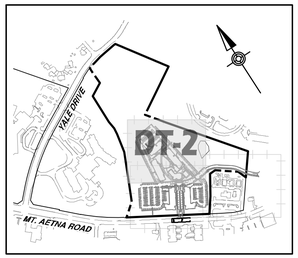

DETAIL SHEET KEY

SCALE: 1" = 700'

GRAPHIC SCALE

30' 15' 0' 30'

SCALE: 1"= 30'

LEGEND

- EXISTING FOREST CONSERVATION EASEMENT
- AREA OF EXISTING FOREST CONSERVATION EASEMENT TO BE ELIMINATED
- PROPOSED PROPERTY LINE
- PROPOSED EASEMENT
- PROPOSED/REQUIRED RIGHT-OF-WAY LINE
- PROPOSED CURB
- PROPOSED FENCE
- PROPOSED GAS LINE
- GV PROPOSED GAS VALVE
- GM PROPOSED GAS METER
- PROPOSED SANITARY LINE
- PROPOSED SANITARY/STORM MANHOLE
- CO PROPOSED SANITARY CLEANOUT
- W PROPOSED DOMESTIC WATER SERVICE LINE
- FW PROPOSED FIRE WATER SERVICE LINE
- PROPOSED WATER VALVE
- PROPOSED FIRE HYDRANT
- PROPOSED WATER METER
- LIGHT BASES
- PROPOSED CONCRETE
- PROPOSED PERMEABLE PAVERS (SEE ARCHITECTURAL PLAN SET FOR SPECIFICATIONS)
- PROPOSED 8' WALKING/BIKE PATH
- PROPOSED SITE PAVING
- PAVEMENT RESTORATION
- PAVEMENT MILL AND OVERLAY
- PROPOSED PAVEMENT PER WASHINGTON COUNTY STANDARDS (SEE MT. AETNA ROAD WIDENING DETAIL)

HRG

HERBERT, ROWLAND & GRUBIC, INC.
5 NORTH MAIN STREET
SUITE 3
CHAMBERSBURG, PA 17201
717. 263.2070 | hrg-inc.com

SITE PLAN
FOR
MERITUS SCHOOL OF OSTEOPATHIC MEDICINE GRADUATE STUDENT HOUSING

1500 MT. AETNA ROAD
HAGERSTOWN, MD 21742

TAX MAP-50 GRID: 14 PARCEL: 1207
HAGERSTOWN WASHINGTON COUNTY MARYLAND

PROFESSIONAL CERTIFICATION:

STATE OF MARYLAND
SCOTT BERG
59144
PROFESSIONAL ENGINEER

I HEREBY CERTIFY THAT THESE DOCUMENTS WERE PREPARED OR APPROVED BY ME, AND THAT I AM DULY LICENSED PROFESSIONAL ENGINEER UNDER THE LAWS OF THE STATE OF MARYLAND. LICENSE NO. 59144, EXP. DATE: 2024-03-26

HRG PROJECT NUMBER:	R003887.0427
PLAN DATE:	2023.09.01
DRAWING SCALE:	AS SHOWN
PROJ. MANAGER:	SBB

REVISIONS

NO.	DATE	DESCRIPTION
1	2024.01.16	PER VARIOUS REVIEW AGENCY COMMENTS
2		
3		
4		
5		
6		
7		
8		
9		

SHEET TITLE:

DETAIL SITE AND DIMENSION PLAN

SP-23-034

SHEET: SI-DT-2

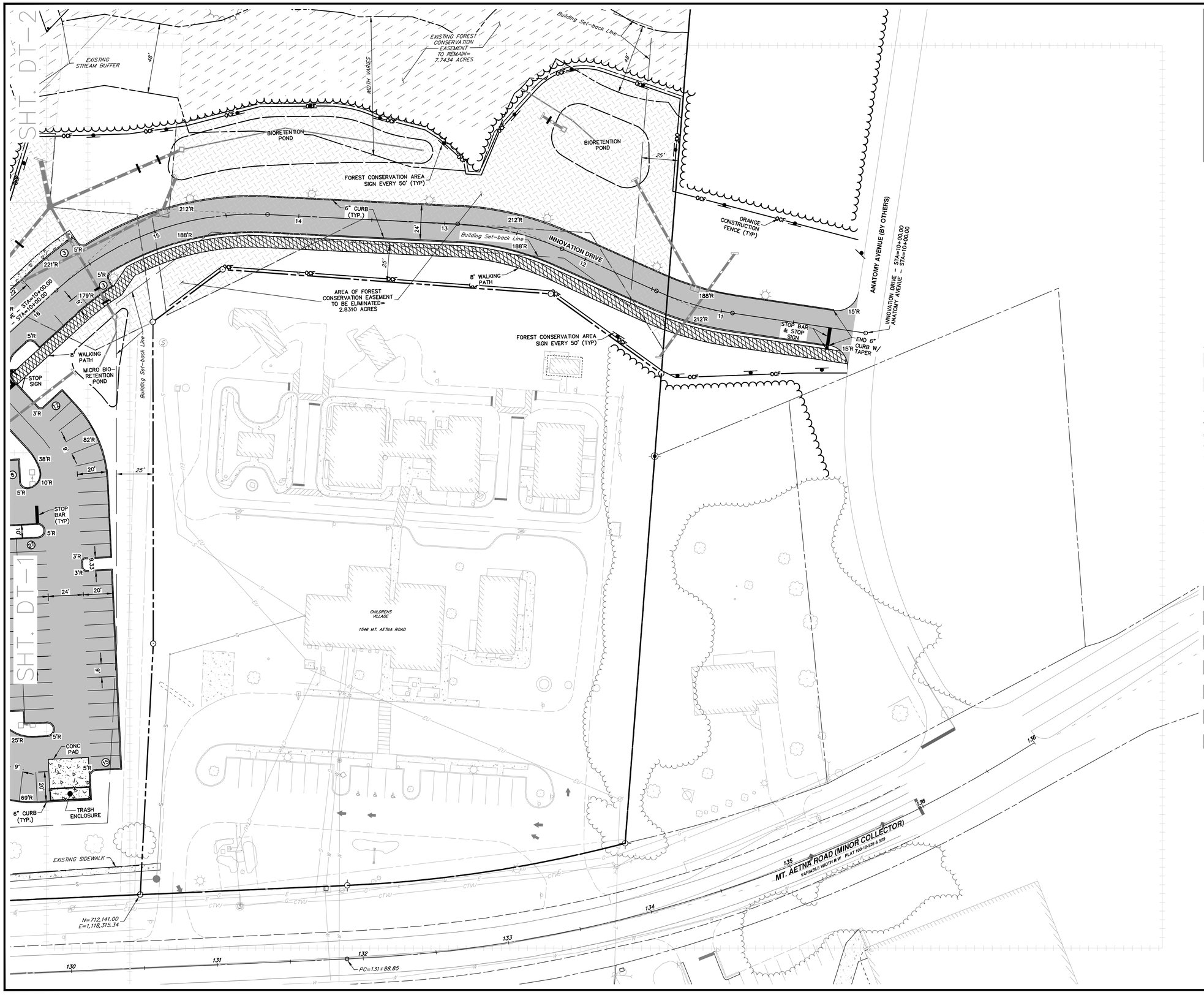

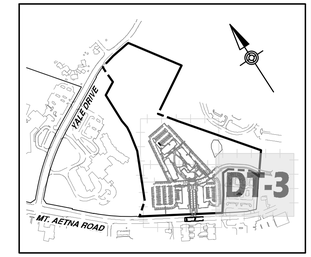

DETAIL SHEET KEY

SCALE: 1" = 700'

GRAPHIC SCALE

30' 15' 0' 30'

SCALE: 1"= 30'

LEGEND

- EXISTING FOREST CONSERVATION EASEMENT
- AREA OF EXISTING FOREST CONSERVATION EASEMENT TO BE ELIMINATED
- PROPOSED PROPERTY LINE
- PROPOSED EASEMENT
- PROPOSED/REQUIRED RIGHT-OF-WAY LINE
- PROPOSED CURB
- PROPOSED FENCE
- PROPOSED GAS LINE
- GV PROPOSED GAS VALVE
- GM PROPOSED GAS METER
- PROPOSED SANITARY LINE
- PROPOSED SANITARY/STORM MANHOLE
- CO PROPOSED SANITARY CLEANOUT
- PROPOSED DOMESTIC WATER SERVICE LINE
- FW PROPOSED FIRE WATER SERVICE LINE
- PROPOSED WATER VALVE
- PROPOSED FIRE HYDRANT
- PROPOSED WATER METER
- LIGHT BASES
- PROPOSED CONCRETE
- PROPOSED PERMEABLE PAVERS (SEE ARCHITECTURAL PLAN SET FOR SPECIFICATIONS)
- PROPOSED 8' WALKING/BIKE PATH
- PROPOSED SITE PAVING
- PAVEMENT RESTORATION
- PAVEMENT MILL AND OVERLAY
- PROPOSED PAVEMENT PER WASHINGTON COUNTY STANDARDS (SEE MT. AETNA ROAD WIDENING DETAIL)

HRG

HERBERT, ROWLAND & GRUBIC, INC.
5 NORTH MAIN STREET
SUITE 3
CHAMBERSBURG, PA 17201
717. 263.2070 | hrg-inc.com

SITE PLAN
FOR
MERITUS SCHOOL OF OSTEOPATHIC MEDICINE GRADUATE STUDENT HOUSING

1500 MT. AETNA ROAD
HAGERSTOWN, MD 21742

TAX MAP-50 GRID: 14 PARCEL: 1207
HAGERSTOWN WASHINGTON COUNTY MARYLAND

PROFESSIONAL CERTIFICATION:

STATE OF MARYLAND — SCOTT BERG — 59144 — PROFESSIONAL ENGINEER

I HEREBY CERTIFY THAT THESE DOCUMENTS WERE PREPARED OR APPROVED BY ME, AND THAT I AM DULY LICENSED PROFESSIONAL ENGINEER UNDER THE LAWS OF THE STATE OF MARYLAND. LICENSE NO. 59144, EXP. DATE: 2024-03-26

HRG PROJECT NUMBER:	R003887.0427
PLAN DATE:	2023.09.01
DRAWING SCALE:	AS SHOWN
PROJ. MANAGER:	SBB

REVISIONS

NO.	DATE	DESCRIPTION
1	2024.01.16	PER VARIOUS REVIEW AGENCY COMMENTS
2		
3		
4		
5		
6		
7		
8		
9		

SHEET TITLE:

DETAIL SITE AND DIMENSION PLAN

SP-23-034

SHEET: SI-DT-3

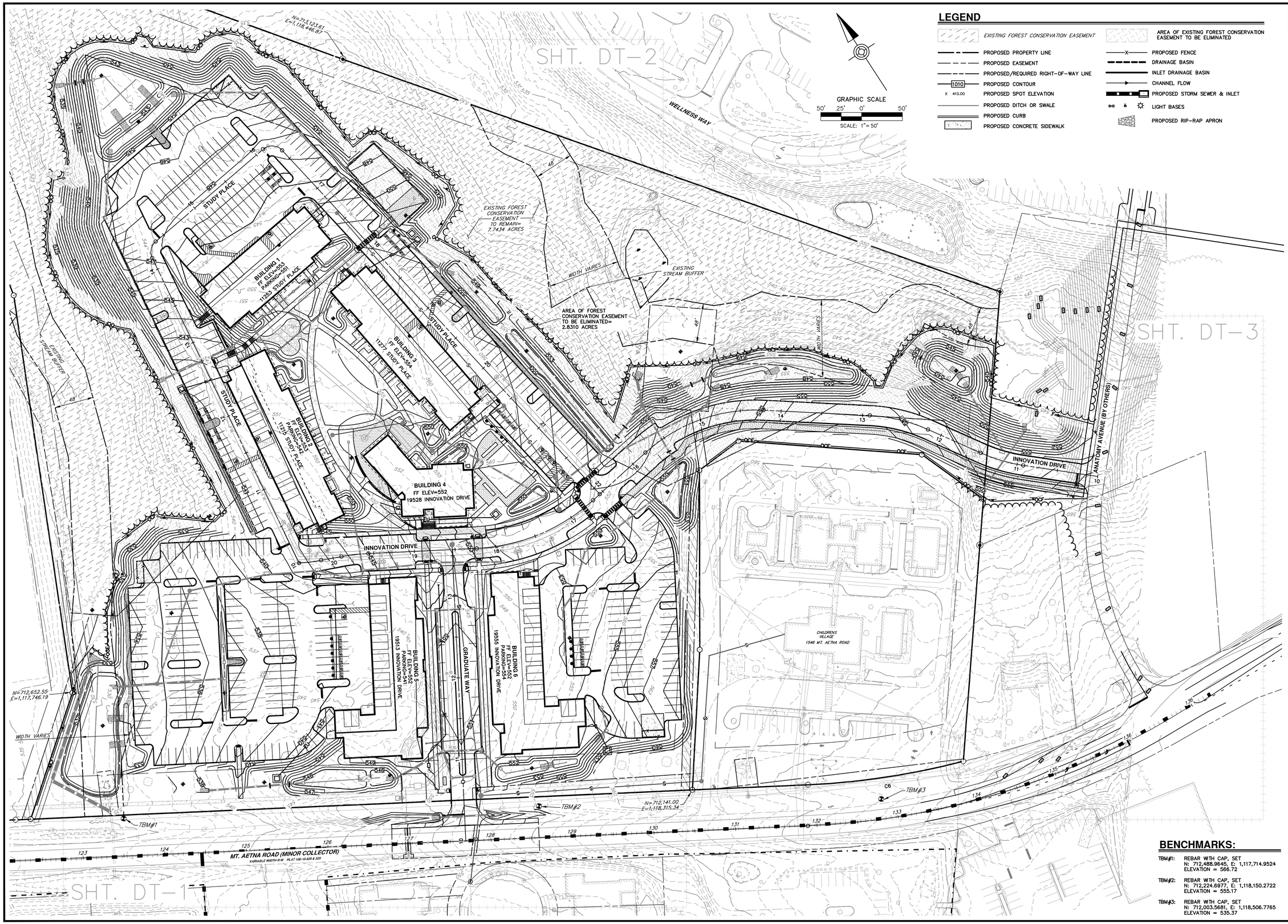

LEGEND

- EXISTING FOREST CONSERVATION EASEMENT
- AREA OF EXISTING FOREST CONSERVATION EASEMENT TO BE ELIMINATED
- PROPOSED PROPERTY LINE
- PROPOSED EASEMENT
- PROPOSED/REQUIRED RIGHT-OF-WAY LINE
- 1010 PROPOSED CONTOUR
- x 410.00 PROPOSED SPOT ELEVATION
- PROPOSED DITCH OR SWALE
- PROPOSED CURB
- PROPOSED CONCRETE SIDEWALK
- PROPOSED FENCE
- DRAINAGE BASIN
- INLET DRAINAGE BASIN
- CHANNEL FLOW
- PROPOSED STORM SEWER & INLET
- LIGHT BASES
- PROPOSED RIP-RAP APRON

BENCHMARKS:

TBM#1: REBAR WITH CAP, SET
N: 712,488.9645, E: 1,117,714.9524
ELEVATION = 566.72

TBM#2: REBAR WITH CAP, SET
N: 712,224.6977, E: 1,118,150.2722
ELEVATION = 555.17

TBM#3: REBAR WITH CAP, SET
N: 712,003.5681, E: 1,118,506.7765
ELEVATION = 535.37

HRG
HERBERT, ROWLAND & GRUBIC, INC.
5 NORTH MAIN STREET
SUITE 3
CHAMBERSBURG, PA 17201
717. 263.2070 | hrg-inc.com

SITE PLAN
FOR
MERITUS SCHOOL OF OSTEOPATHIC MEDICINE GRADUATE STUDENT HOUSING

1500 MT. AETNA ROAD
HAGERSTOWN, MD 21742
TAX MAP-50 GRID: 14 PARCEL: 1207
HAGERSTOWN WASHINGTON COUNTY MARYLAND

PROFESSIONAL CERTIFICATION:

STATE OF MARYLAND
SCOTT BERG
5914A
PROFESSIONAL ENGINEER

I HEREBY CERTIFY THAT THESE DOCUMENTS WERE PREPARED OR APPROVED BY ME, AND THAT I AM A DULY LICENSED PROFESSIONAL ENGINEER UNDER THE LAWS OF THE STATE OF MARYLAND. LICENSE NO. 5914A, EXP. DATE: 2024-03-28

HRG PROJECT NUMBER:	R003887.0427
PLAN DATE:	2023.09.01
DRAWING SCALE:	AS SHOWN
PROJ. MANAGER:	SBB

REVISIONS

NO.	DATE	DESCRIPTION
1	2024.01.16	PER VARIOUS REVIEW AGENCY COMMENTS
2		
3		
4		
5		
6		
7		
8		
9		

SHEET TITLE:
OVERALL GRADING PLAN

SP-23-034

SHEET: GR-OA

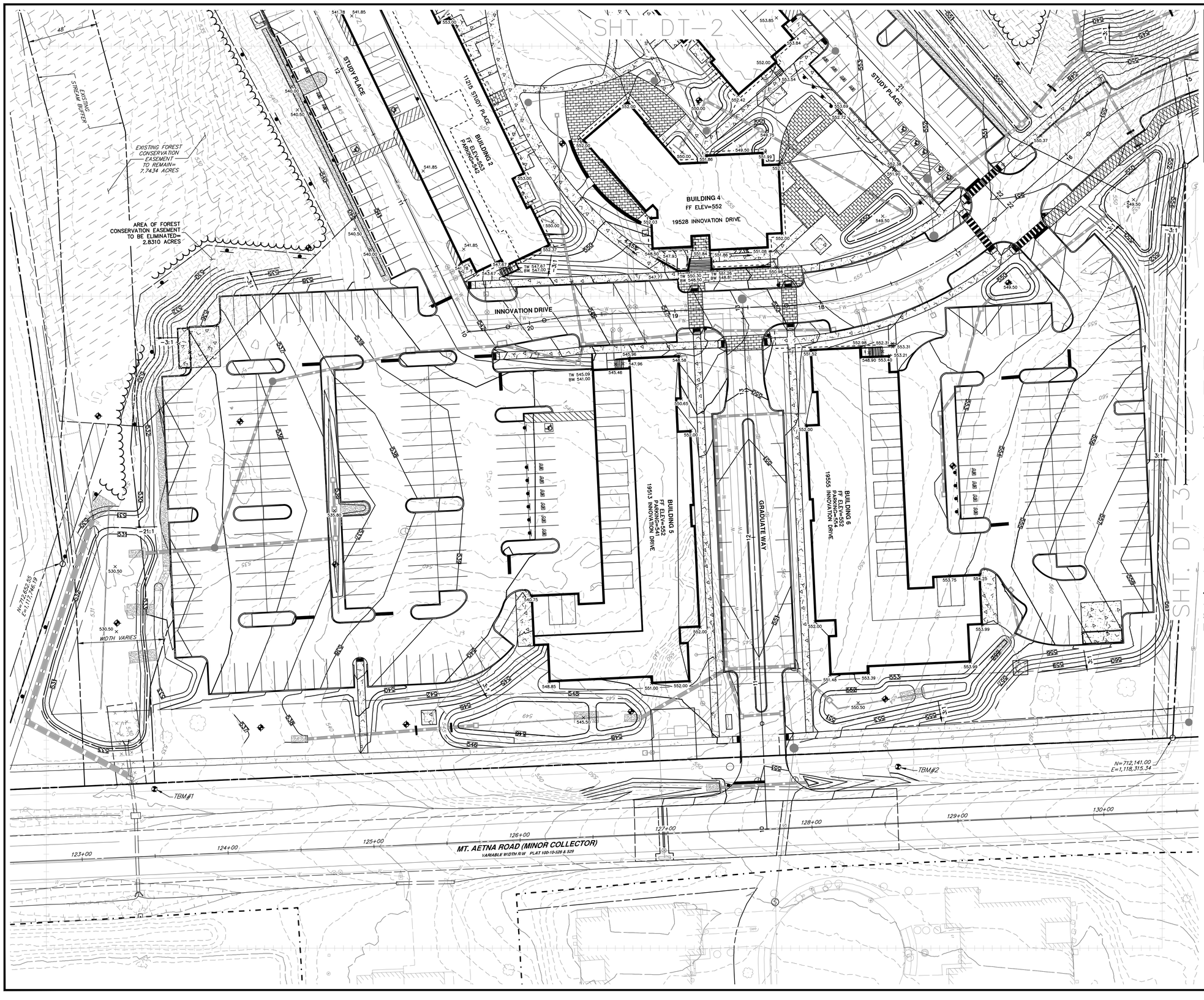

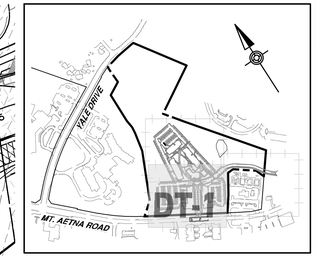

DETAIL SHEET KEY

SCALE: 1" = 700'

GRAPHIC SCALE

30' 15' 0' 30'

SCALE: 1"= 30'

LEGEND

- EXISTING FOREST CONSERVATION EASEMENT
- AREA OF EXISTING FOREST CONSERVATION EASEMENT TO BE ELIMINATED
- PROPOSED PROPERTY LINE
- PROPOSED EASEMENT
- PROPOSED/REQUIRED RIGHT-OF-WAY LINE
- 1010 PROPOSED CONTOUR
- X 410.00 PROPOSED SPOT ELEVATION
- X BC 410.00 PROPOSED BOTTOM OF CURB SPOT ELEVATION
- X TC 410.00 PROPOSED TOP OF CURB SPOT ELEVATION
- X HP 410.00 PROPOSED HIGH POINT SPOT ELEVATION
- X LP 410.00 PROPOSED LOW POINT SPOT ELEVATION
- X TOW 410.00 PROPOSED TOP OF WALL SPOT ELEVATION
- X BOW 410.00 PROPOSED BOTTOM OF WALL SPOT ELEVATION
- PROPOSED DITCH OR SWALE
- PROPOSED CURB
- PROPOSED CONCRETE SIDEWALK
- PROPOSED FENCE
- DRAINAGE BASIN
- INLET DRAINAGE BASIN
- CHANNEL FLOW
- PROPOSED STORM SEWER & INLET
- PROPOSED UNDERGROUND DETENTION
- CMP CORRUGATED METAL PIPE
- SLCPP SMOOTH LINED CORRUGATED PLASTIC PIPE
- HDPE HIGH DENSITY POLYETHYLENE
- RCP REINFORCED CONCRETE PIPE
- LIGHT BASES
- PROPOSED RIP-RAP APRON

BENCHMARKS:

TBM#1: REBAR WITH CAP, SET
N: 712,488.9645, E: 1,117,714.9524
ELEVATION = 566.72

TBM#2: REBAR WITH CAP, SET
N: 712,224.6977, E: 1,118,150.2722
ELEVATION = 555.17

TBM#3: REBAR WITH CAP, SET
N: 712,003.5681, E: 1,118,506.7765
ELEVATION = 535.37

HRG
HERBERT, ROWLAND & GRUBIC, INC.
5 NORTH MAIN STREET
SUITE 3
CHAMBERSBURG, PA 17201
717. 263.2070 | hrg-inc.com

SITE PLAN
FOR
MERITUS SCHOOL OF OSTEOPATHIC MEDICINE GRADUATE STUDENT HOUSING

1500 MT. AETNA ROAD
HAGERSTOWN, MD 21742
TAX MAP-50 GRID: 14 PARCEL: 1207
HAGERSTOWN WASHINGTON COUNTY MARYLAND

PROFESSIONAL CERTIFICATION:

STATE OF MARYLAND
SCOTT BERG
59144
PROFESSIONAL ENGINEER

I HEREBY CERTIFY THAT THESE DOCUMENTS WERE PREPARED OR APPROVED BY ME, AND THAT I AM DULY LICENSED PROFESSIONAL ENGINEER UNDER THE LAWS OF THE STATE OF MARYLAND. LICENSE NO. 59144, EXP. DATE: 2024-03-28

HRG PROJECT NUMBER:	R003887.0427
PLAN DATE:	2023.09.01
DRAWING SCALE:	AS SHOWN
PROJ. MANAGER:	SBB

REVISIONS

NO.	DATE	DESCRIPTION
1	2024.01.16	PER VARIOUS REVIEW AGENCY COMMENTS
2		
3		
4		
5		
6		
7		
8		
9		

SHEET TITLE:

DETAIL GRADING PLAN

SP-23-034

SHEET: GR-DT-1

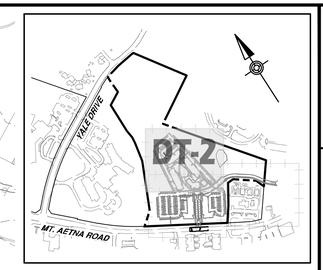

DETAIL SHEET KEY

SCALE: 1" = 700'

GRAPHIC SCALE

30' 15' 0' 30'

SCALE: 1"= 30'

LEGEND

	EXISTING FOREST CONSERVATION EASEMENT
	AREA OF EXISTING FOREST CONSERVATION EASEMENT TO BE ELIMINATED
	PROPOSED PROPERTY LINE
	PROPOSED EASEMENT
	PROPOSED/REQUIRED RIGHT-OF-WAY LINE
1010	PROPOSED CONTOUR
X 410.00	PROPOSED SPOT ELEVATION
X BC 410.00	PROPOSED BOTTOM OF CURB SPOT ELEVATION
X TC 410.00	PROPOSED TOP OF CURB SPOT ELEVATION
X HP 410.00	PROPOSED HIGH POINT SPOT ELEVATION
X LP 410.00	PROPOSED LOW POINT SPOT ELEVATION
X TOW 410.00	PROPOSED TOP OF WALL SPOT ELEVATION
X BOW 410.00	PROPOSED BOTTOM OF WALL SPOT ELEVATION
	PROPOSED DITCH OR SWALE
	PROPOSED CURB
	PROPOSED CONCRETE SIDEWALK
	PROPOSED FENCE
	DRAINAGE BASIN
	INLET DRAINAGE BASIN
	CHANNEL FLOW
	PROPOSED STORM SEWER & INLET
	PROPOSED UNDERGROUND DETENTION
CMP	CORRUGATED METAL PIPE
SLCPP	SMOOTH LINED CORRUGATED PLASTIC PIPE
HDPE	HIGH DENSITY POLYETHYLENE
RCP	REINFORCED CONCRETE PIPE
	LIGHT BASES
	PROPOSED RIP-RAP APRON

HRG

HERBERT, ROWLAND & GRUBIC, INC.
5 NORTH MAIN STREET
SUITE 3
CHAMBERSBURG, PA 17201
717. 263.2070 | hrg-inc.com

SITE PLAN
FOR
MERITUS SCHOOL OF OSTEOPATHIC MEDICINE GRADUATE STUDENT HOUSING

1500 MT. AETNA ROAD
HAGERSTOWN, MD 21742

TAX MAP-50 GRID: 14 PARCEL: 1207
HAGERSTOWN WASHINGTON COUNTY MARYLAND

PROFESSIONAL CERTIFICATION:

STATE OF MARYLAND
SCOTT BERG
59144
PROFESSIONAL ENGINEER

I HEREBY CERTIFY THAT THESE DOCUMENTS WERE PREPARED OR APPROVED BY ME, AND THAT I AM DULY LICENSED PROFESSIONAL ENGINEER UNDER THE LAWS OF THE STATE OF MARYLAND. LICENSE NO. 59144, EXP. DATE: 2024-07-30

HRG PROJECT NUMBER:	R003887.0427
PLAN DATE:	2023.09.01
DRAWING SCALE:	AS SHOWN
PROJ. MANAGER:	SBB

REVISIONS

NO.	DATE	DESCRIPTION
1	2024.01.16	PER VARIOUS REVIEW AGENCY COMMENTS
2		
3		
4		
5		
6		
7		
8		
9		

SHEET TITLE:

DETAIL GRADING PLAN

SP-23-034

SHEET:
GR-DT-2

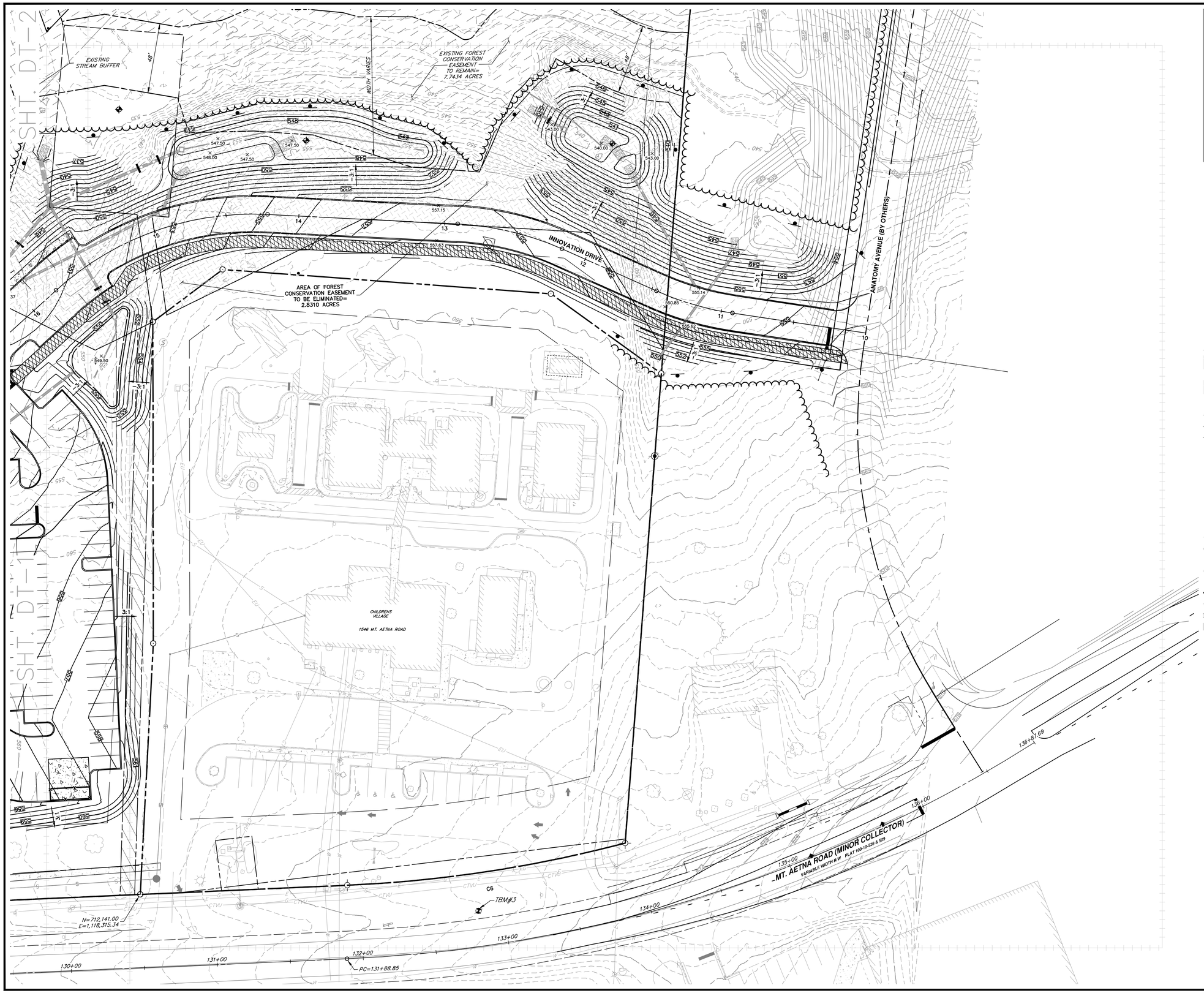

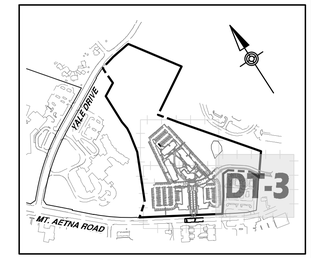

DETAIL SHEET KEY

SCALE: 1" = 700'

GRAPHIC SCALE

30' 15' 0' 30'

SCALE: 1"= 30'

LEGEND

	EXISTING FOREST CONSERVATION EASEMENT
	AREA OF EXISTING FOREST CONSERVATION EASEMENT TO BE ELIMINATED
	PROPOSED PROPERTY LINE
	PROPOSED EASEMENT
	PROPOSED/REQUIRED RIGHT-OF-WAY LINE
1010	PROPOSED CONTOUR
X 410.00	PROPOSED SPOT ELEVATION
X BC 410.00	PROPOSED BOTTOM OF CURB SPOT ELEVATION
X TC 410.00	PROPOSED TOP OF CURB SPOT ELEVATION
X HP 410.00	PROPOSED HIGH POINT SPOT ELEVATION
X LP 410.00	PROPOSED LOW POINT SPOT ELEVATION
X TOW 410.00	PROPOSED TOP OF WALL SPOT ELEVATION
X BOW 410.00	PROPOSED BOTTOM OF WALL SPOT ELEVATION
	PROPOSED DITCH OR SWALE
	PROPOSED CURB
	PROPOSED CONCRETE SIDEWALK
X	PROPOSED FENCE
	DRAINAGE BASIN
	INLET DRAINAGE BASIN
	CHANNEL FLOW
	PROPOSED STORM SEWER & INLET
	PROPOSED UNDERGROUND DETENTION
CMP	CORRUGATED METAL PIPE
SLCPP	SMOOTH LINED CORRUGATED PLASTIC PIPE
HDPE	HIGH DENSITY POLYETHYLENE
RCP	REINFORCED CONCRETE PIPE
	LIGHT BASES
	PROPOSED RIP-RAP APRON

BENCHMARKS:

TBM#1: REBAR WITH CAP, SET
N: 712,488.9645, E: 1,117,714.9524
ELEVATION = 566.72

TBM#2: REBAR WITH CAP, SET
N: 712,224.6977, E: 1,118,150.2722
ELEVATION = 555.17

TBM#3: REBAR WITH CAP, SET
N: 712,003.5681, E: 1,118,506.7765
ELEVATION = 535.37

HRG
HERBERT, ROWLAND & GRUBIC, INC.
5 NORTH MAIN STREET
SUITE 3
CHAMBERSBURG, PA 17201
717. 263.2070 | hrg-inc.com

SITE PLAN
FOR
MERITUS SCHOOL OF OSTEOPATHIC MEDICINE
GRADUATE STUDENT HOUSING

1500 MT. AETNA ROAD
HAGERSTOWN, MD 21742
TAX MAP: 50 / GRID: 14 / PARCEL: 1207
HAGERSTOWN WASHINGTON COUNTY MARYLAND

PROFESSIONAL CERTIFICATION:

STATE OF MARYLAND
SCOTT BERT
59144
PROFESSIONAL ENGINEER

I HEREBY CERTIFY THAT THESE DOCUMENTS WERE PREPARED OR APPROVED BY ME, AND THAT I AM DULY LICENSED PROFESSIONAL ENGINEER UNDER THE LAWS OF THE STATE OF MARYLAND. LICENSE NO. 59144, EXP. DATE: 2024-03-28

HRG PROJECT NUMBER:	R003887.0427
PLAN DATE:	2023.09.01
DRAWING SCALE:	AS SHOWN
PROJ. MANAGER:	SBB

REVISIONS

NO.	DATE	DESCRIPTION
1	2024.01.16	PER VARIOUS REVIEW AGENCY COMMENTS
2		
3		
4		
5		
6		
7		
8		
9		

SHEET TITLE:
DETAIL GRADING PLAN

SP-23-034

SHEET: GR-DT-3

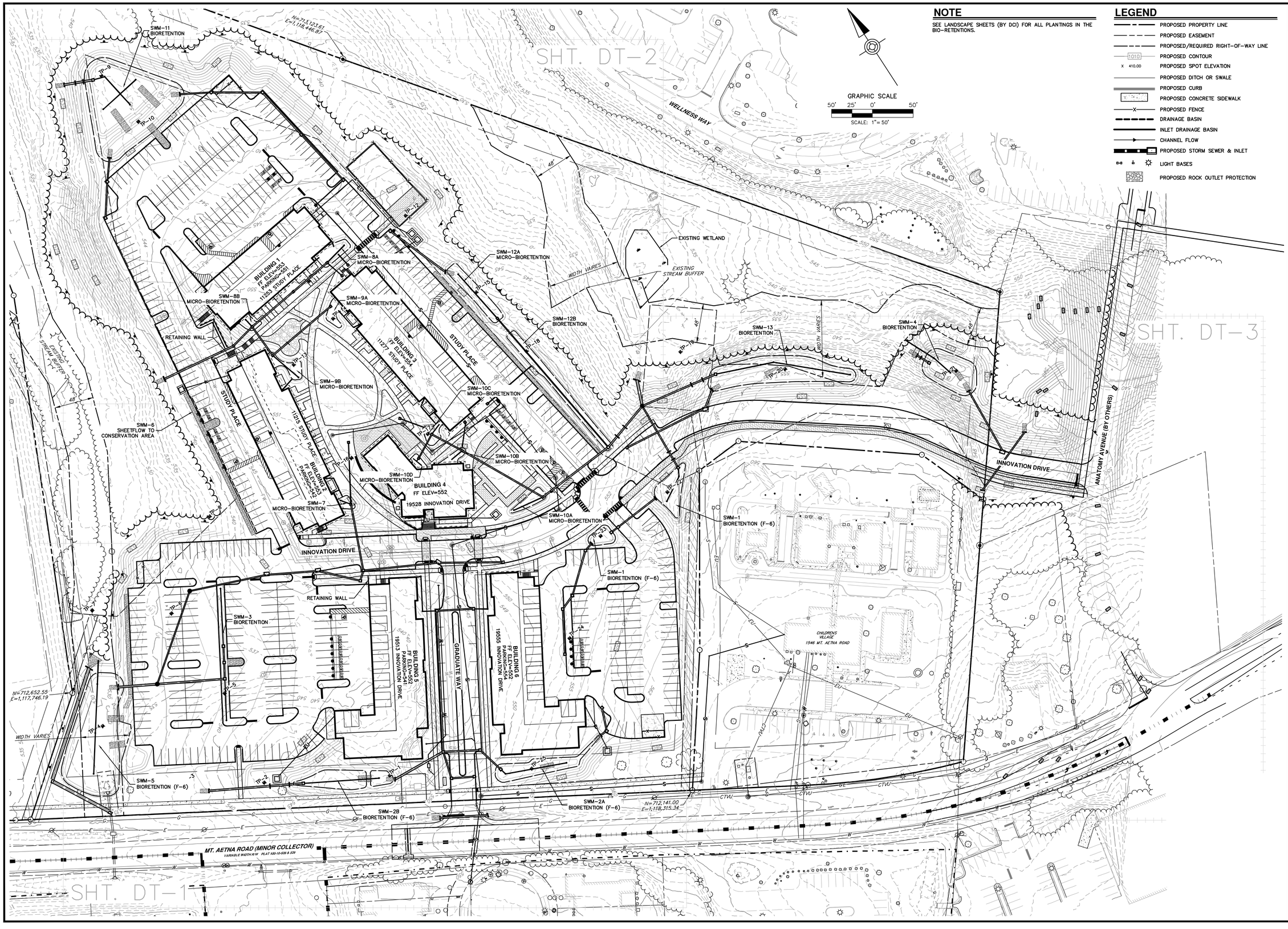

NOTE

SEE LANDSCAPE SHEETS (BY DCI) FOR ALL PLANTINGS IN THE BIO-RETENTIONS.

LEGEND

- PROPOSED PROPERTY LINE
- PROPOSED EASEMENT
- PROPOSED/REQUIRED RIGHT-OF-WAY LINE
- 1010 PROPOSED CONTOUR
- X 410.00 PROPOSED SPOT ELEVATION
- PROPOSED DITCH OR SWALE
- PROPOSED CURB
- PROPOSED CONCRETE SIDEWALK
- PROPOSED FENCE
- DRAINAGE BASIN
- INLET DRAINAGE BASIN
- CHANNEL FLOW
- PROPOSED STORM SEWER & INLET
- LIGHT BASES
- PROPOSED ROCK OUTLET PROTECTION

HRG
HERBERT, ROWLAND & GRUBIC, INC.
5 NORTH MAIN STREET
SUITE 3
CHAMBERSBURG, PA 17201
717. 263.2070 | hrg-inc.com

SITE PLAN FOR MERITUS SCHOOL OF OSTEOPATHIC MEDICINE GRADUATE STUDENT HOUSING

1500 MT. AETNA ROAD
HAGERSTOWN, MD 21742
TAX MAP-50 GRID: 14 PARCEL: 1207
HAGERSTOWN WASHINGTON COUNTY MARYLAND

PROFESSIONAL CERTIFICATION:

STATE OF MARYLAND SCOTT BERG 5914A PROFESSIONAL ENGINEER

I HEREBY CERTIFY THAT THESE DOCUMENTS WERE PREPARED OR APPROVED BY ME, AND THAT I AM A DULY LICENSED PROFESSIONAL ENGINEER UNDER THE LAWS OF THE STATE OF MARYLAND. LICENSE NO. 5914A, EXP. DATE: 2024-03-28

HRG PROJECT NUMBER:	R003887.0427
PLAN DATE:	2023.09.01
DRAWING SCALE:	AS SHOWN
PROJ. MANAGER:	SBB

REVISIONS

NO.	DATE	DESCRIPTION
1	2024.01.16	PER VARIOUS REVIEW AGENCY COMMENTS
2		
3		
4		
5		
6		
7		
8		
9		

SHEET TITLE:

OVERALL STORMWATER MANAGEMENT PLAN

SP-23-034

SHEET: STM-OA

FILE: R:\R003887.0427\CAD\SP\SP-23-034\SP-23-034 STM-OA.DWG LAYOUT: STM-OA PLOTTED ON: 2024-01-16 AT 8:30 PM BY: SBB

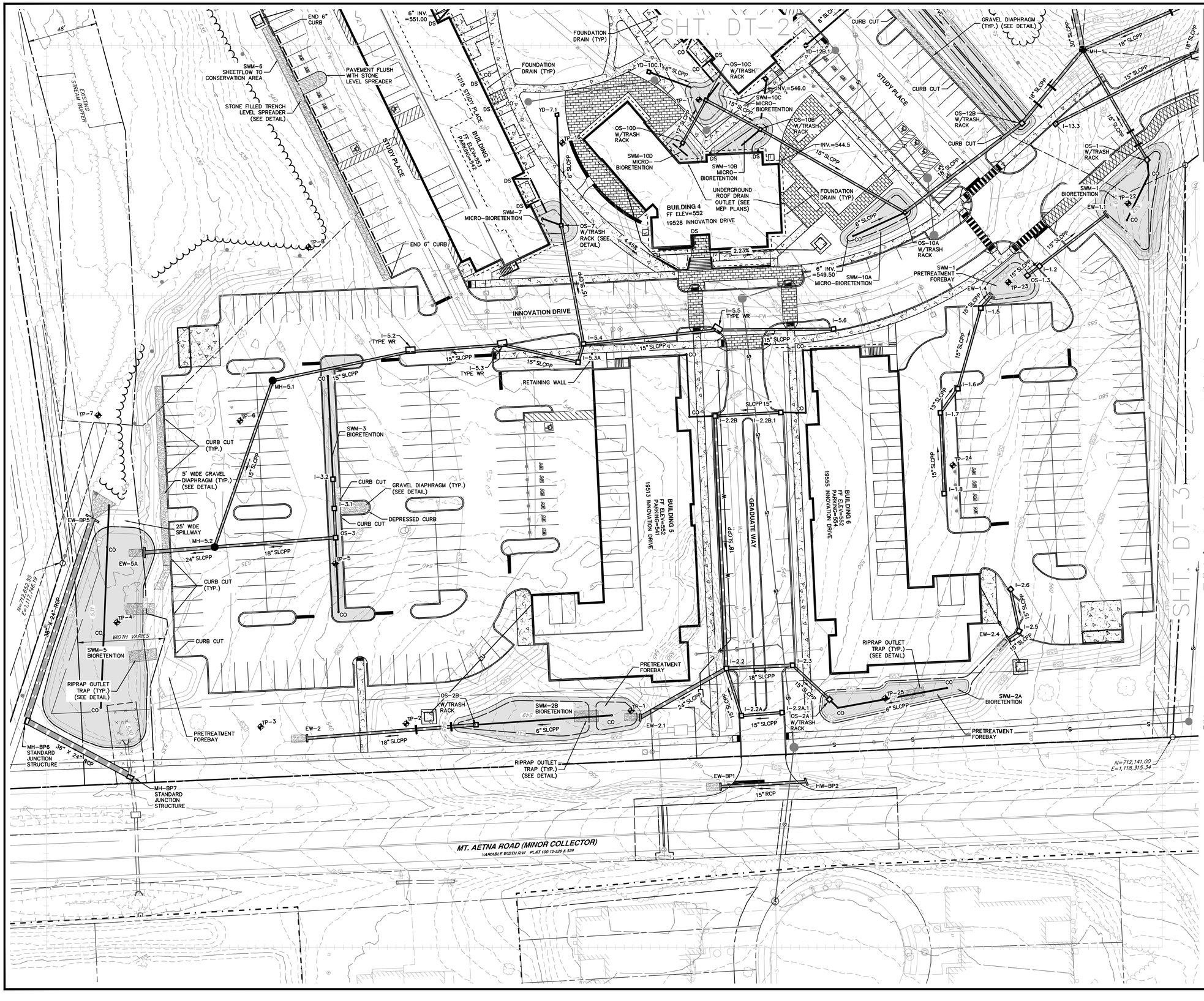

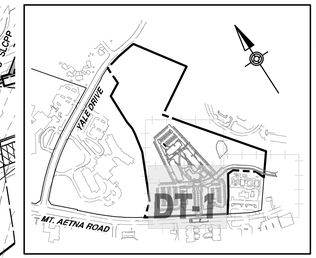

DETAIL SHEET KEY

SCALE: 1" = 700'

GRAPHIC SCALE

30' 15' 0' 30'

SCALE: 1"= 30'

LEGEND

	PROPOSED PROPERTY LINE
	PROPOSED EASEMENT
	PROPOSED/REQUIRED RIGHT-OF-WAY LINE
1010	PROPOSED CONTOUR
X 410.00	PROPOSED SPOT ELEVATION
X BC 410.00	PROPOSED BOTTOM OF CURB SPOT ELEVATION
X TC 410.00	PROPOSED TOP OF CURB SPOT ELEVATION
X HP 410.00	PROPOSED HIGH POINT SPOT ELEVATION
X LP 410.00	PROPOSED LOW POINT SPOT ELEVATION
X TOW 410.00	PROPOSED TOP OF WALL SPOT ELEVATION
X BOW 410.00	PROPOSED BOTTOM OF WALL SPOT ELEVATION
	PROPOSED DITCH OR SWALE
	PROPOSED CURB
	PROPOSED CONCRETE SIDEWALK
	PROPOSED FENCE
	DRAINAGE BASIN
	INLET DRAINAGE BASIN
	CHANNEL FLOW
	PROPOSED STORM SEWER & INLET
	PROPOSED UNDERGROUND DETENTION
CMP	CORRUGATED METAL PIPE
SLCPP	SMOOTH LINED CORRUGATED PLASTIC PIPE
HDPE	HIGH DENSITY POLYETHYLENE
RCP	REINFORCED CONCRETE PIPE
	LIGHT BASES
	PROPOSED ROCK OUTLET PROTECTION
	LIMITS OF POND LINER

NOTE

SEE LANDSCAPE SHEETS (BY DCI) FOR ALL PLANTINGS IN THE BIO-RETENTIONS.

HRG

HERBERT, ROWLAND & GRUBIC, INC.
5 NORTH MAIN STREET
SUITE 3
CHAMBERSBURG, PA 17201
717. 263.2070 | hrg-inc.com

SITE PLAN
FOR
MERITUS SCHOOL OF OSTEOPATHIC MEDICINE GRADUATE STUDENT HOUSING

1500 MT. AETNA ROAD
HAGERSTOWN, MD 21742
TAX MAP-50 GRID:14 PARCEL: 1207
HAGERSTOWN WASHINGTON COUNTY MARYLAND

PROFESSIONAL CERTIFICATION:

STATE OF MARYLAND
SCOTT BERY
59144
PROFESSIONAL ENGINEER

I HEREBY CERTIFY THAT THESE DOCUMENTS WERE PREPARED OR APPROVED BY ME, AND THAT I AM DULY LICENSED PROFESSIONAL ENGINEER UNDER THE LAWS OF THE STATE OF MARYLAND. LICENSE NO. 59144, EXP. DATE: 2024-01-29

HRG PROJECT NUMBER:	R003887.0427
PLAN DATE:	2023.09.01
DRAWING SCALE:	AS SHOWN
PROJ. MANAGER:	SBB

REVISIONS

NO.	DATE	DESCRIPTION
1	2024.01.16	PER VARIOUS REVIEW AGENCY COMMENTS
2		
3		
4		
5		
6		
7		
8		
9		

SHEET TITLE:

DETAIL STORMWATER MANAGEMENT PLAN

SP-23-034

SHEET: STM-DT-1

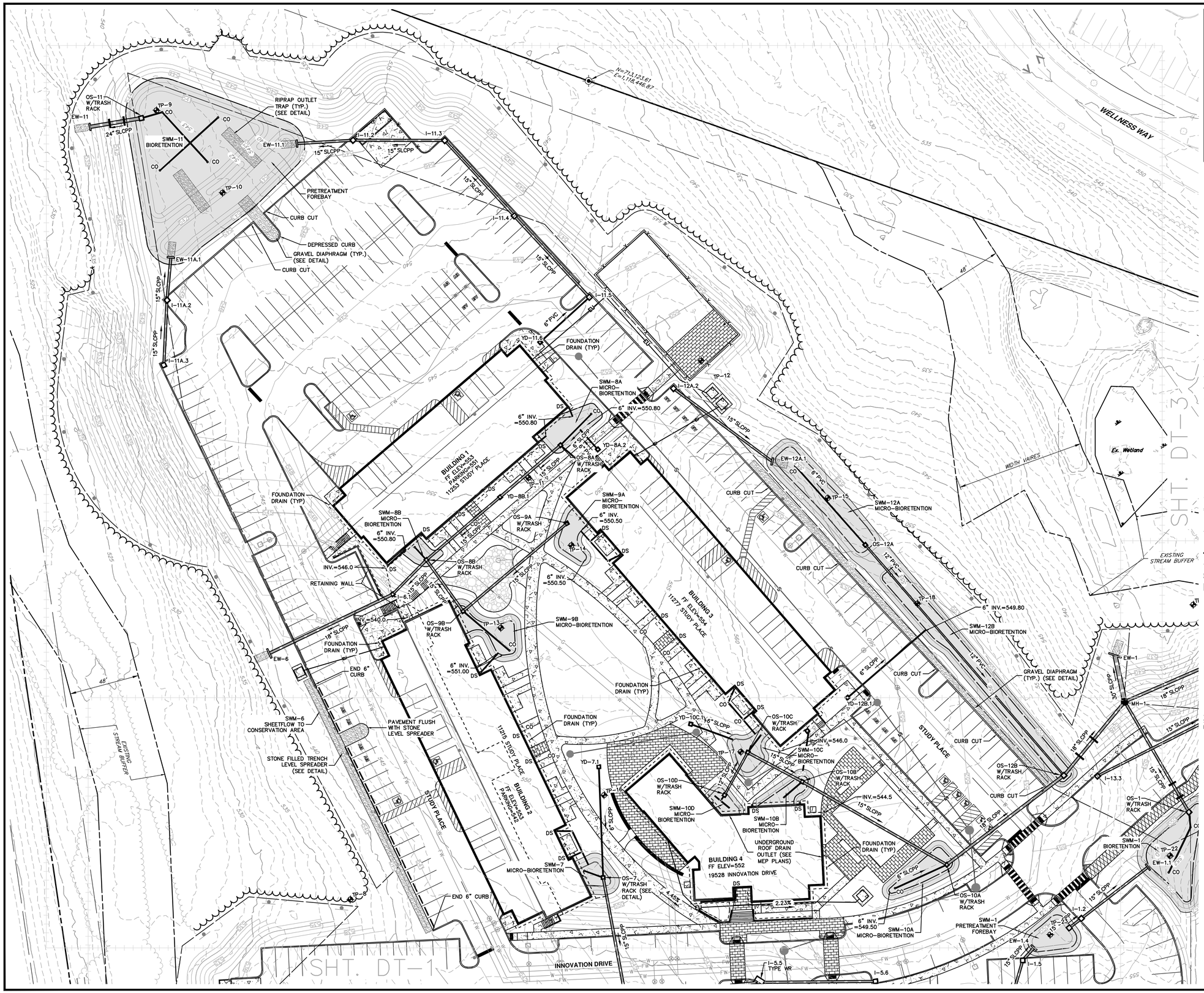

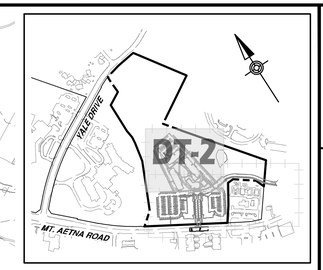

DETAIL SHEET KEY

SCALE: 1" = 700'

GRAPHIC SCALE

30' 15' 0' 30'

SCALE: 1"= 30'

LEGEND

- PROPOSED PROPERTY LINE
- PROPOSED EASEMENT
- PROPOSED/REQUIRED RIGHT-OF-WAY LINE
- PROPOSED CONTOUR
- X 410.00 PROPOSED SPOT ELEVATION
- X BC 410.00 PROPOSED BOTTOM OF CURB SPOT ELEVATION
- X TC 410.00 PROPOSED TOP OF CURB SPOT ELEVATION
- X HP 410.00 PROPOSED HIGH POINT SPOT ELEVATION
- X LP 410.00 PROPOSED LOW POINT SPOT ELEVATION
- X TOW 410.00 PROPOSED TOP OF WALL SPOT ELEVATION
- X BOW 410.00 PROPOSED BOTTOM OF WALL SPOT ELEVATION
- PROPOSED DITCH OR SWALE
- PROPOSED CURB
- PROPOSED CONCRETE SIDEWALK
- PROPOSED FENCE
- DRAINAGE BASIN
- INLET DRAINAGE BASIN
- CHANNEL FLOW
- PROPOSED STORM SEWER & INLET
- PROPOSED UNDERGROUND DETENTION
- CMP CORRUGATED METAL PIPE
- SLCPP SMOOTH LINED CORRUGATED PLASTIC PIPE
- HDPE HIGH DENSITY POLYETHYLENE
- RCP REINFORCED CONCRETE PIPE
- LIGHT BASES
- PROPOSED ROCK OUTLET PROTECTION
- LIMITS OF POND LINER

NOTE

SEE LANDSCAPE SHEETS (BY DCI) FOR ALL PLANTINGS IN THE BIO-RETENTIONS.

HRG

HERBERT, ROWLAND & GRUBIC, INC.
5 NORTH MAIN STREET
SUITE 3
CHAMBERSBURG, PA 17201
717. 263.2070 | hrg-inc.com

SITE PLAN
FOR
MERITUS SCHOOL OF OSTEOPATHIC MEDICINE GRADUATE STUDENT HOUSING

1500 MT. AETNA ROAD
HAGERSTOWN, MD 21742

TAX MAP-50 GRID: 14 PARCEL: 1207
HAGERSTOWN WASHINGTON COUNTY MARYLAND

PROFESSIONAL CERTIFICATION:

STATE OF MARYLAND — SCOTT BERG — 5914A — PROFESSIONAL ENGINEER

I HEREBY CERTIFY THAT THESE DOCUMENTS WERE PREPARED OR APPROVED BY ME, AND THAT I AM DULY LICENSED PROFESSIONAL ENGINEER UNDER THE LAWS OF THE STATE OF MARYLAND. LICENSE NO. 59144, EXP. DATE: 2024-03-28

HRG PROJECT NUMBER:	R003887.0427
PLAN DATE:	2023.09.01
DRAWING SCALE:	AS SHOWN
PROJ. MANAGER:	SBB

REVISIONS

NO.	DATE	DESCRIPTION
1	2024.01.16	PER VARIOUS REVIEW AGENCY COMMENTS
2		
3		
4		
5		
6		
7		
8		
9		

SHEET TITLE:

DETAIL STORMWATER MANAGEMENT PLAN

SP-23-034

SHEET: STM-DT-2 17 OF 81

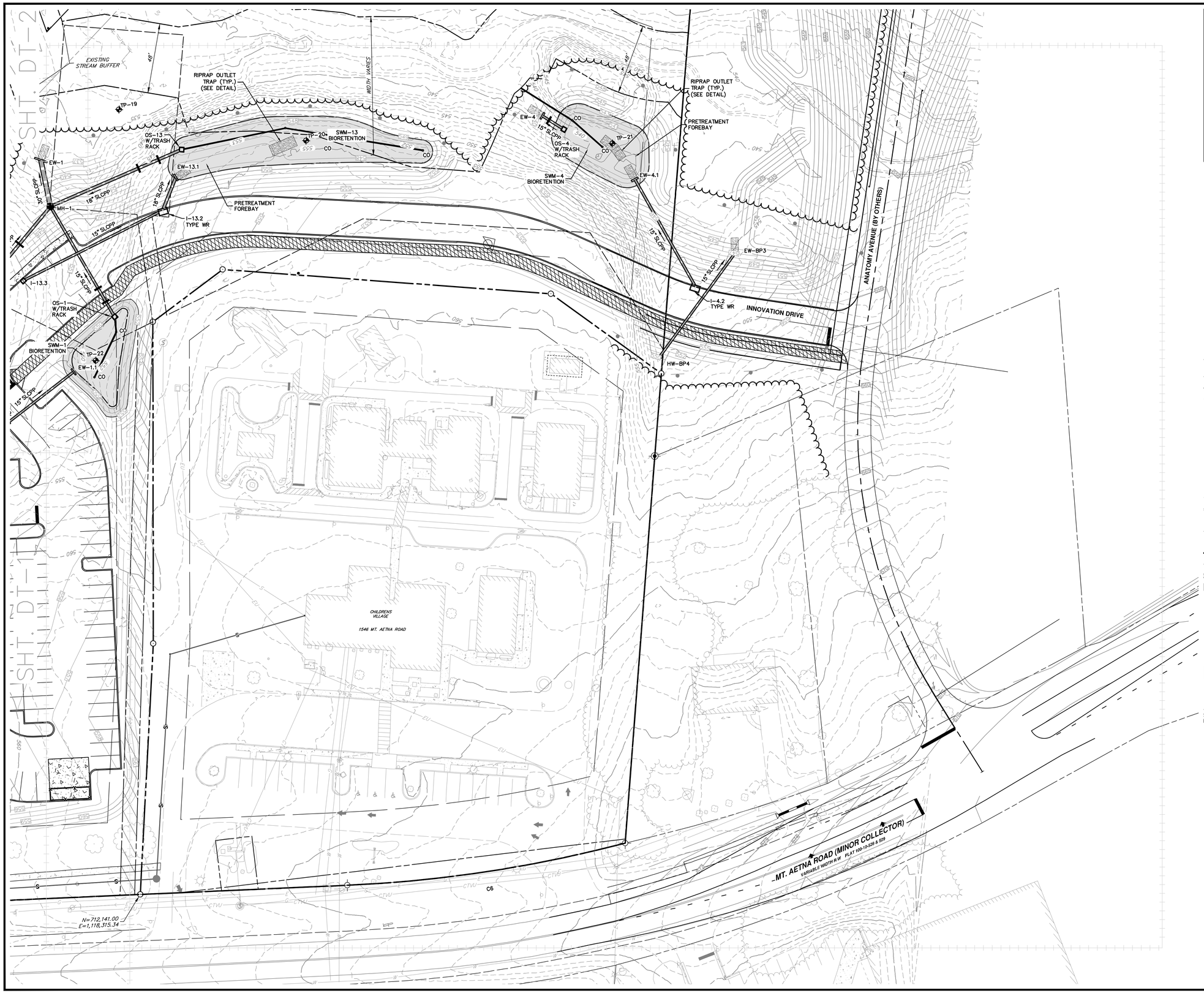

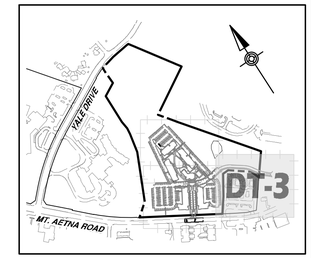

DETAIL SHEET KEY

SCALE: 1" = 700'

GRAPHIC SCALE

30' 15' 0' 30'

SCALE: 1"= 30'

LEGEND

	PROPOSED PROPERTY LINE
	PROPOSED EASEMENT
	PROPOSED/REQUIRED RIGHT-OF-WAY LINE
1010	PROPOSED CONTOUR
X 410.00	PROPOSED SPOT ELEVATION
X BC 410.00	PROPOSED BOTTOM OF CURB SPOT ELEVATION
X TC 410.00	PROPOSED TOP OF CURB SPOT ELEVATION
X HP 410.00	PROPOSED HIGH POINT SPOT ELEVATION
X LP 410.00	PROPOSED LOW POINT SPOT ELEVATION
X TOW 410.00	PROPOSED TOP OF WALL SPOT ELEVATION
X BOW 410.00	PROPOSED BOTTOM OF WALL SPOT ELEVATION
	PROPOSED DITCH OR SWALE
	PROPOSED CURB
	PROPOSED CONCRETE SIDEWALK
X	PROPOSED FENCE
	DRAINAGE BASIN
	INLET DRAINAGE BASIN
	CHANNEL FLOW
	PROPOSED STORM SEWER & INLET
	PROPOSED UNDERGROUND DETENTION
CMP	CORRUGATED METAL PIPE
SLCPP	SMOOTH LINED CORRUGATED PLASTIC PIPE
HDPE	HIGH DENSITY POLYETHYLENE
RCP	REINFORCED CONCRETE PIPE
	LIGHT BASES
	PROPOSED ROCK OUTLET PROTECTION
	LIMITS OF POND LINER

NOTE

SEE LANDSCAPE SHEETS (BY DCI) FOR ALL PLANTINGS IN THE BIO-RETENTIONS.

HRG

HERBERT, ROWLAND & GRUBIC, INC.
5 NORTH MAIN STREET
SUITE 3
CHAMBERSBURG, PA 17201
717. 263.2070 | hrg-inc.com

SITE PLAN FOR MERITUS SCHOOL OF OSTEOPATHIC MEDICINE GRADUATE STUDENT HOUSING

1500 MT. AETNA ROAD
HAGERSTOWN, MD 21742
TAX MAP: 50 / GRID: 14 / PARCEL: 1207
HAGERSTOWN WASHINGTON COUNTY MARYLAND

PROFESSIONAL CERTIFICATION:

STATE OF MARYLAND SCOTT BERT 59144 PROFESSIONAL ENGINEER

I HEREBY CERTIFY THAT THESE DOCUMENTS WERE PREPARED OR APPROVED BY ME, AND THAT I AM DULY LICENSED PROFESSIONAL ENGINEER UNDER THE LAWS OF THE STATE OF MARYLAND. LICENSE NO. 59144, EXP. DATE: 2024-03-28

HRG PROJECT NUMBER:	R003887.0427
PLAN DATE:	2023.09.01
DRAWING SCALE:	AS SHOWN
PROJ. MANAGER:	SBB

REVISIONS

NO.	DATE	DESCRIPTION
1	2024.01.16	PER VARIOUS REVIEW AGENCY COMMENTS
2		
3		
4		
5		
6		
7		
8		
9		

SHEET TITLE:

DETAIL STORMWATER MANAGEMENT PLAN

SP-23-034

SHEET: STM-DT-3

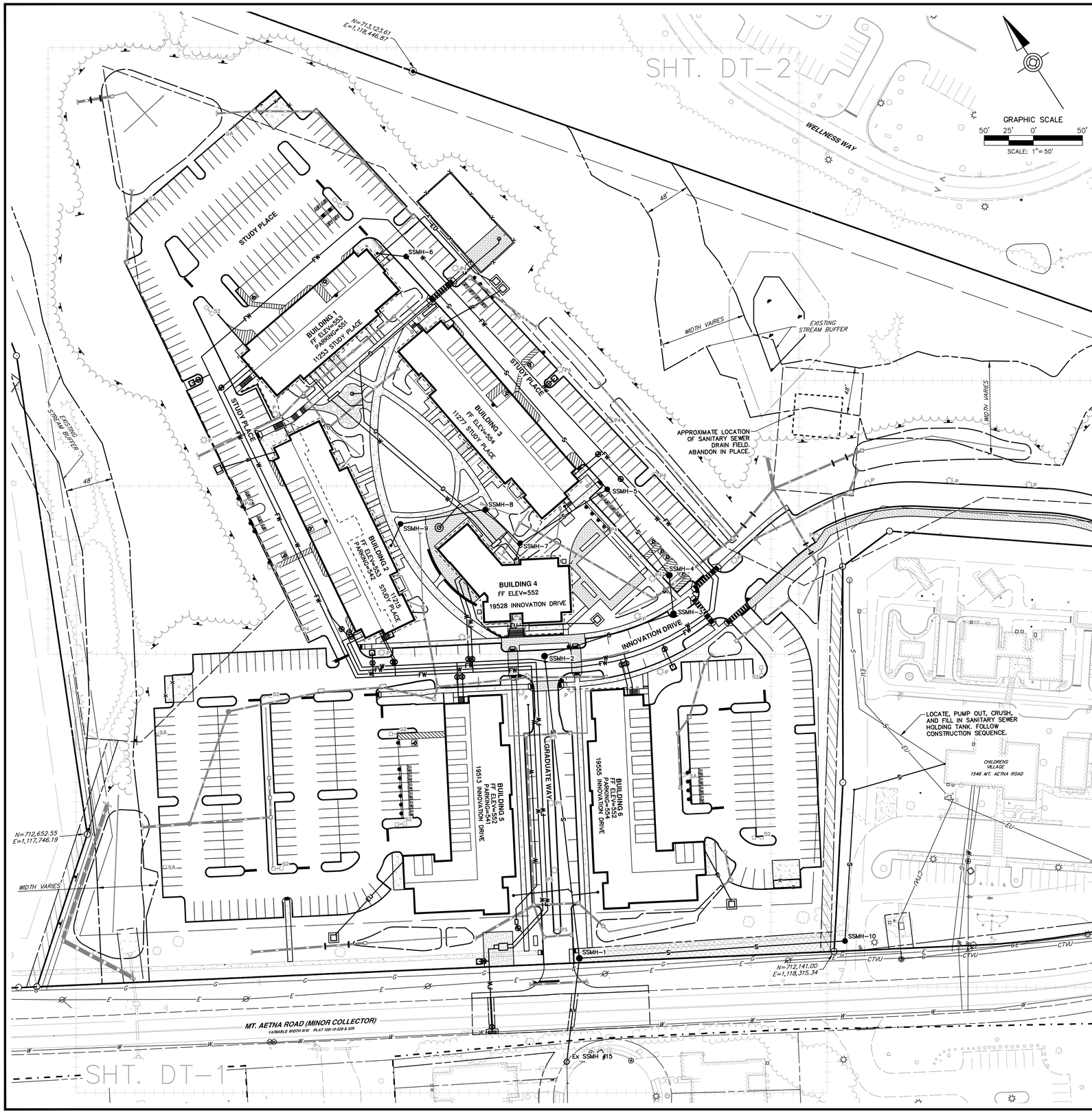

LEGEND

	PROPOSED PROPERTY LINE	S	PROPOSED SANITARY LINE
	PROPOSED EASEMENT	FM	PROPOSED FORCEMAIN LINE
	PROPOSED/REQUIRED RIGHT-OF-WAY LINE		PROPOSED SANITARY/STORM MANHOLE
	PROPOSED CURB	CO	PROPOSED SANITARY CLEANOUT
G	PROPOSED GAS LINE	W	PROPOSED DOMESTIC WATER SERVICE LINE
GV	PROPOSED GAS VALVE	FW	PROPOSED FIRE WATER SERVICE LINE
GM	PROPOSED GAS METER	WV	PROPOSED WATER VALVE
	PROPOSED WATER EASEMENT	FH	PROPOSED FIRE HYDRANT
	PROPOSED SEWER EASEMENT		

CITY OF HAGERSTOWN UTILITIES DEPARTMENT - WATER AND WASTEWATER DIVISIONS

THIS APPROVAL IS FOR THE DESIGN AND LAYOUT OF THE PROPOSED WATER AND WASTEWATER SYSTEM IMPROVEMENTS. ALL WATER AND WASTEWATER SYSTEM IMPROVEMENTS SHALL BE CONSTRUCTED TO THE STANDARDS IN EFFECT AT THE TIME OF CONSTRUCTION. THIS APPROVAL DOES NOT GUARANTEE AVAILABILITY OF WATER OR WASTEWATER SERVICE. WATER AND WASTEWATER SERVICE IS AVAILABLE SUBJECT TO CONFORMANCE WITH ALL POLICIES AND STANDARDS IN EFFECT AT THE TIME OF APPLICATION FOR SERVICE, PAYMENT OF FEES AND APPROVAL OF THE WATER AND/OR WASTEWATER SERVICE APPLICATION. THE WATER DIVISION DOES NOT GUARANTEE A SPECIFIC WATER PRESSURE OR FLOW AT ANY METER OR FIRE HYDRANT. THIS APPROVAL IS VALID FOR A PERIOD OF ONE YEAR.

(SIGNATURE) (DATE)

NOTE: A CONSTRUCTION PERMIT SHALL BE OBTAINED FROM THE CITY OF HAGERSTOWN UTILITIES DEPARTMENT PRIOR TO BEGINNING CONSTRUCTION OF THE WATERLINE AND/OR SEWERLINE. CONTACT THE UTILITIES ENGINEERING DEPARTMENT AT 301-739-8577, EXT 653 FOR THE PERMIT APPLICATION

WATER AND SEWER SUPPLY: PUBLIC BY CITY OF HAGERSTOWN

EXISTING WATER ALLOCATION:	32,565 GPD
PROPOSED WATER ALLOCATION:	34,200 GPD
EXISTING SEWER ALLOCATION:	23,792 GPD
PROPOSED SEWER ALLOCATION:	34,200 GPD

NOTES:

1. REFER TO MEP PLANS FOR EXACT LOCATION OF ALL UTILITIES INCLUDING BUT NOT LIMITED TO:
   - DOMESTIC WATER
   - FIRE WATER
   - SANITARY SEWER
   - FOUNDATION DRAINS
   - STORM DRAINS
   - ELECTRIC
2. SOURCE OF ELECTRIC AND TELECOMM IS UNKNOWN AT THE TIME OF THIS PLAN. EXACT LOCATIONS WILL BE PROVIDED AT A LATER DATE.
3. THE PROPOSED HYDRANT PRIOR TO THE WATER METER VAULT SHALL BE OWNED AND MAINTAINED BY THE CITY OF HAGERSTOWN.
4. ALL FIRE HYDRANTS BEYOND THE WATER METER VAULT SHALL BE PRIVATE AND SHALL BE PAINTED RED.

HRG
HERBERT, ROWLAND & GRUBIC, INC.
5 NORTH MAIN STREET
SUITE 3
CHAMBERSBURG, PA 17201
717. 263.2070 | hrg-inc.com

SITE PLAN
FOR
MERITUS SCHOOL OF OSTEOPATHIC MEDICINE
GRADUATE STUDENT HOUSING
1500 MT. AETNA ROAD
HAGERSTOWN, MD 21742
TAX MAP-50 GRID: 14 | PARCEL: 1207
HAGERSTOWN WASHINGTON COUNTY MARYLAND

PROFESSIONAL CERTIFICATION:

STATE OF MARYLAND
SCOTT BERG
59144
PROFESSIONAL ENGINEER

I HEREBY CERTIFY THAT THESE DOCUMENTS WERE PREPARED OR APPROVED BY ME, AND THAT I AM DULY LICENSED PROFESSIONAL ENGINEER UNDER THE LAWS OF THE STATE OF MARYLAND. LICENSE NO. 59144, EXP. DATE: 2024-03-28

HRG PROJECT NUMBER:	R003887.0427
PLAN DATE:	2023.09.01
DRAWING SCALE:	AS SHOWN
PROJ. MANAGER:	SBB

REVISIONS

NO.	DATE	DESCRIPTION
1	2024.01.16	PER VARIOUS REVIEW AGENCY COMMENTS
2		
3		
4		
5		
6		
7		
8		
9		

SHEET TITLE:
OVERALL UTILITY PLAN

SP-23-034

SHEET: UT-OA

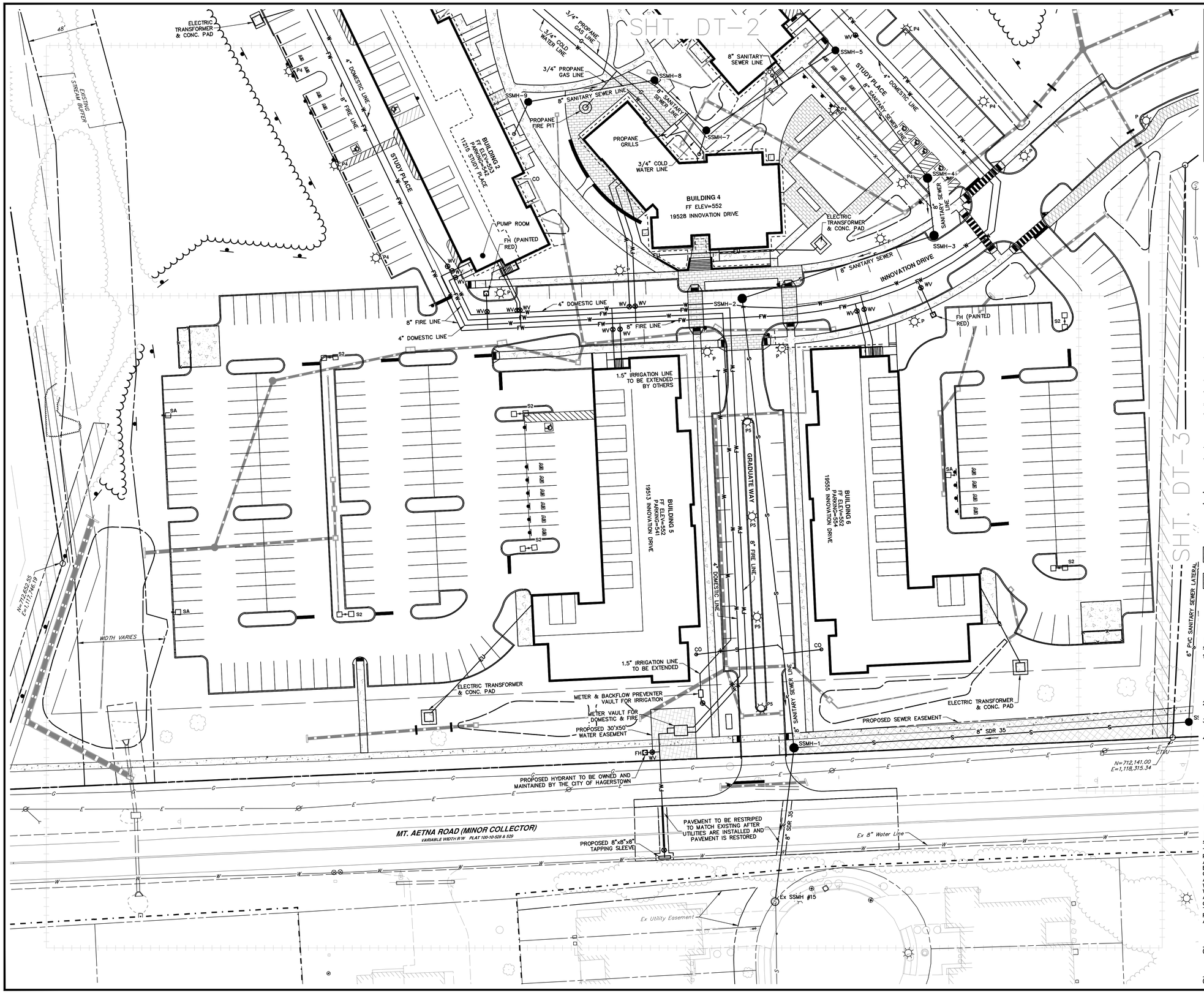

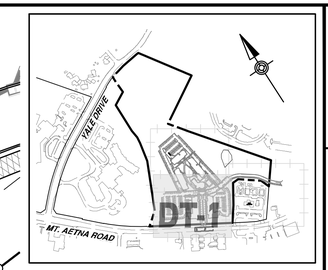

DETAIL SHEET KEY

SCALE: 1" = 700'

GRAPHIC SCALE

30' 15' 0' 30'

SCALE: 1"= 30'

LEGEND

- PROPOSED PROPERTY LINE
- PROPOSED EASEMENT
- PROPOSED/REQUIRED RIGHT-OF-WAY LINE
- PROPOSED CURB
- G — PROPOSED GAS LINE
- GV — PROPOSED GAS VALVE
- GM — PROPOSED GAS METER
- S — PROPOSED SANITARY LINE
- FM — PROPOSED FORCEMAIN LINE
- PROPOSED SANITARY/STORM MANHOLE
- CO — PROPOSED SANITARY CLEANOUT
- W — PROPOSED DOMESTIC WATER SERVICE LINE
- FW — PROPOSED FIRE WATER SERVICE LINE
- WV — PROPOSED WATER VALVE
- FH — PROPOSED FIRE HYDRANT
- WM — PROPOSED WATER METER
- PROPOSED WATER EASEMENT
- PROPOSED SEWER EASEMENT

NOTES:

1. REFER TO MEP PLANS FOR EXACT LOCATION OF ALL UTILITIES INCLUDING BUT NOT LIMITED TO:
   - DOMESTIC WATER
   - FIRE WATER
   - SANITARY SEWER
   - FOUNDATION DRAINS
   - STORM DRAINS
   - ELECTRIC
2. SOURCE OF ELECTRIC AND TELECOMM IS UNKNOWN AT THE TIME OF THIS PLAN. EXACT LOCATIONS WILL BE PROVIDED AT A LATER DATE.
3. THE PROPOSED HYDRANT PRIOR TO THE WATER METER VAULT SHALL BE OWNED AND MAINTAINED BY THE CITY OF HAGERSTOWN.
4. ALL FIRE HYDRANTS BEYOND THE WATER METER VAULT SHALL BE PRIVATE AND SHALL BE PAINTED RED.

CITY OF HAGERSTOWN UTILITIES DEPARTMENT - WATER AND WASTEWATER DIVISIONS

THIS APPROVAL IS FOR THE DESIGN AND LAYOUT OF THE PROPOSED WATER AND WASTEWATER SYSTEM IMPROVEMENTS. ALL WATER AND WASTEWATER SYSTEM IMPROVEMENTS SHALL BE CONSTRUCTED TO THE STANDARDS IN EFFECT AT THE TIME OF CONSTRUCTION. THIS APPROVAL DOES NOT GUARANTEE AVAILABILITY OF WATER OR WASTEWATER SERVICE. WATER AND WASTEWATER SERVICE IS AVAILABLE SUBJECT TO CONFORMANCE WITH ALL POLICIES AND STANDARDS IN EFFECT AT THE TIME OF APPLICATION FOR SERVICE, PAYMENT OF FEES AND APPROVAL OF THE WATER AND/OR WASTEWATER SERVICE APPLICATION. THE WATER DIVISION DOES NOT GUARANTEE A SPECIFIC WATER PRESSURE OR FLOW AT ANY METER OR FIRE HYDRANT. THIS APPROVAL IS VALID FOR A PERIOD OF ONE YEAR.

(SIGNATURE)

(DATE)

HRG
HERBERT, ROWLAND & GRUBIC, INC.
5 NORTH MAIN STREET
SUITE 3
CHAMBERSBURG, PA 17201
717. 263.2070 | hrg-inc.com

SITE PLAN FOR MERITUS SCHOOL OF OSTEOPATHIC MEDICINE GRADUATE STUDENT HOUSING

1500 MT. AETNA ROAD
HAGERSTOWN, MD 21742
TAX MAP-50 GRID: 14 PARCEL: 1207
HAGERSTOWN WASHINGTON COUNTY MARYLAND

PROFESSIONAL CERTIFICATION:

STATE OF MARYLAND — SCOTT BERG — 59144 — PROFESSIONAL ENGINEER

I HEREBY CERTIFY THAT THESE DOCUMENTS WERE PREPARED OR APPROVED BY ME, AND THAT I AM DULY LICENSED PROFESSIONAL ENGINEER UNDER THE LAWS OF THE STATE OF MARYLAND. LICENSE NO. 59144, EXP. DATE: 2024-03-28

HRG PROJECT NUMBER: R003887.0427
PLAN DATE: 2023.09.01
DRAWING SCALE: AS SHOWN
PROJ. MANAGER: SBB

REVISIONS

NO.	DATE	DESCRIPTION
1	2024.01.16	PER VARIOUS REVIEW AGENCY COMMENTS
2		
3		
4		
5		
6		
7		
8		
9		

SHEET TITLE:
DETAIL UTILITY PLAN

SP-23-034

SHEET: UT-DT-1

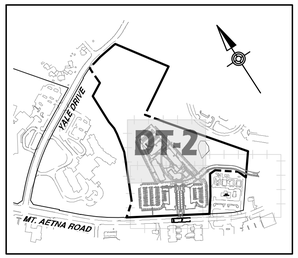

DETAIL SHEET KEY

SCALE: 1" = 700'

GRAPHIC SCALE

30' 15' 0' 30'

SCALE: 1"= 30'

LEGEND

	PROPOSED PROPERTY LINE
	PROPOSED EASEMENT
	PROPOSED/REQUIRED RIGHT-OF-WAY LINE
	PROPOSED CURB
G	PROPOSED GAS LINE
GV	PROPOSED GAS VALVE
GM	PROPOSED GAS METER
S	PROPOSED SANITARY LINE
FM	PROPOSED FORCEMAIN LINE
	PROPOSED SANITARY/STORM MANHOLE
CO	PROPOSED SANITARY CLEANOUT
W	PROPOSED DOMESTIC WATER SERVICE LINE
FW	PROPOSED FIRE WATER SERVICE LINE
WV	PROPOSED WATER VALVE
FH	PROPOSED FIRE HYDRANT
WM	PROPOSED WATER METER
	PROPOSED WATER EASEMENT
	PROPOSED SEWER EASEMENT

NOTES:

1. REFER TO MEP PLANS FOR EXACT LOCATION OF ALL UTILITIES INCLUDING BUT NOT LIMITED TO:
   - DOMESTIC WATER
   - FIRE WATER
   - SANITARY SEWER
   - FOUNDATION DRAINS
   - STORM DRAINS
   - ELECTRIC
2. SOURCE OF ELECTRIC AND TELECOMM IS UNKNOWN AT THE TIME OF THIS PLAN. EXACT LOCATIONS WILL BE PROVIDED AT A LATER DATE.
3. THE PROPOSED HYDRANT PRIOR TO THE WATER METER VAULT SHALL BE OWNED AND MAINTAINED BY THE CITY OF HAGERSTOWN.
4. ALL FIRE HYDRANTS BEYOND THE WATER METER VAULT SHALL BE PRIVATE AND SHALL BE PAINTED RED.

CITY OF HAGERSTOWN UTILITIES DEPARTMENT - WATER AND WASTEWATER DIVISIONS

THIS APPROVAL IS FOR THE DESIGN AND LAYOUT OF THE PROPOSED WATER AND WASTEWATER SYSTEM IMPROVEMENTS. ALL WATER AND WASTEWATER SYSTEM IMPROVEMENTS SHALL BE CONSTRUCTED TO THE STANDARDS IN EFFECT AT THE TIME OF CONSTRUCTION. THIS APPROVAL DOES NOT GUARANTEE AVAILABILITY OF WATER OR WASTEWATER SERVICE. WATER AND WASTEWATER SERVICE IS AVAILABLE SUBJECT TO CONFORMANCE WITH ALL POLICIES AND STANDARDS IN EFFECT AT THE TIME OF APPLICATION FOR SERVICE, PAYMENT OF FEES AND APPROVAL OF THE WATER AND/OR WASTEWATER SERVICE APPLICATION. THE WATER DIVISION DOES NOT GUARANTEE A SPECIFIC WATER PRESSURE OR FLOW AT ANY METER OR FIRE HYDRANT. THIS APPROVAL IS VALID FOR A PERIOD OF ONE YEAR.

(SIGNATURE)

(DATE)

HRG
HERBERT, ROWLAND & GRUBIC, INC.
5 NORTH MAIN STREET
SUITE 3
CHAMBERSBURG, PA 17201
717. 263.2070 | hrg-inc.com

SITE PLAN
FOR
MERITUS SCHOOL OF OSTEOPATHIC MEDICINE GRADUATE STUDENT HOUSING

1500 MT. AETNA ROAD
HAGERSTOWN, MD 21742
TAX MAP-50 GRID: 14 PARCEL: 1207
HAGERSTOWN WASHINGTON COUNTY MARYLAND

PROFESSIONAL CERTIFICATION:

STATE OF MARYLAND
SCOTT BERG
59144
PROFESSIONAL ENGINEER

I HEREBY CERTIFY THAT THESE DOCUMENTS WERE PREPARED OR APPROVED BY ME, AND THAT I AM DULY LICENSED PROFESSIONAL ENGINEER UNDER THE LAWS OF THE STATE OF MARYLAND. LICENSE NO. 59144, EXP. DATE: 2024-03-28

HRG PROJECT NUMBER:	R003887.0427
PLAN DATE:	2023.09.01
DRAWING SCALE:	AS SHOWN
PROJ. MANAGER:	SBB

REVISIONS

NO.	DATE	DESCRIPTION
1	2024.01.16	PER VARIOUS REVIEW AGENCY COMMENTS
2		
3		
4		
5		
6		
7		
8		
9		

SHEET TITLE:
DETAIL UTILITY PLAN

SP-23-034

SHEET:
UT-DT-2

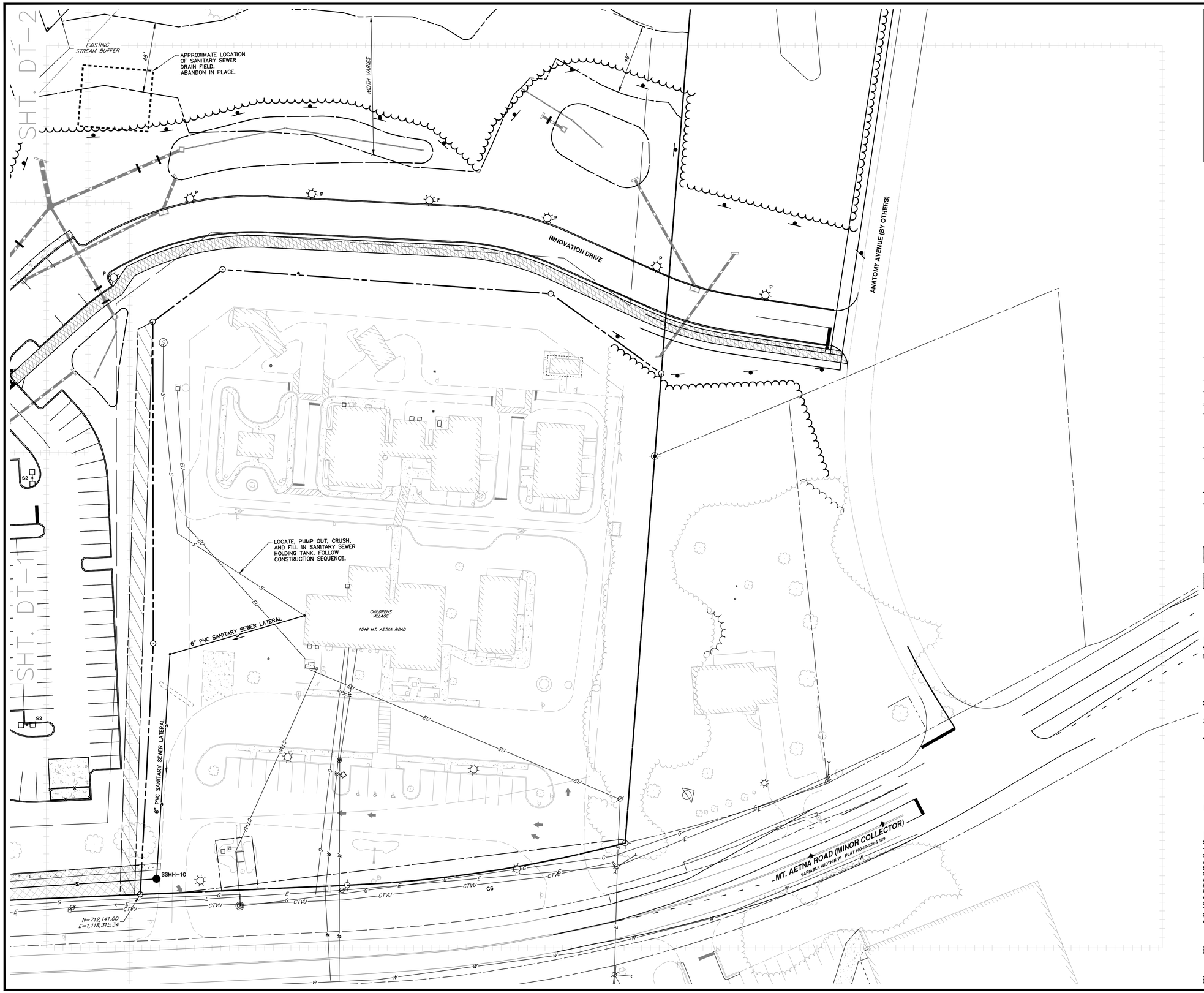

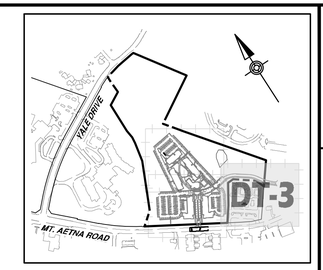

DETAIL SHEET KEY

SCALE: 1" = 700'

GRAPHIC SCALE

30' 15' 0' 30'

SCALE: 1"= 30'

LEGEND

- PROPOSED PROPERTY LINE
- PROPOSED EASEMENT
- PROPOSED/REQUIRED RIGHT-OF-WAY LINE
- PROPOSED CURB
- G — PROPOSED GAS LINE
- GV — PROPOSED GAS VALVE
- GM — PROPOSED GAS METER
- S — PROPOSED SANITARY LINE
- FM — PROPOSED FORCEMAIN LINE
- PROPOSED SANITARY/STORM MANHOLE
- CO — PROPOSED SANITARY CLEANOUT
- W — PROPOSED DOMESTIC WATER SERVICE LINE
- FW — PROPOSED FIRE WATER SERVICE LINE
- WV — PROPOSED WATER VALVE
- FH — PROPOSED FIRE HYDRANT
- WM — PROPOSED WATER METER
- PROPOSED WATER EASEMENT
- PROPOSED SEWER EASEMENT

NOTES:

1. REFER TO MEP PLANS FOR EXACT LOCATION OF ALL UTILITIES INCLUDING BUT NOT LIMITED TO:
   - DOMESTIC WATER
   - FIRE WATER
   - SANITARY SEWER
   - FOUNDATION DRAINS
   - STORM DRAINS
   - ELECTRIC
2. SOURCE OF ELECTRIC AND TELECOMM IS UNKNOWN AT THE TIME OF THIS PLAN. EXACT LOCATIONS WILL BE PROVIDED AT A LATER DATE.
3. THE PROPOSED HYDRANT PRIOR TO THE WATER METER VAULT SHALL BE OWNED AND MAINTAINED BY THE CITY OF HAGERSTOWN.
4. ALL FIRE HYDRANTS BEYOND THE WATER METER VAULT SHALL BE PRIVATE AND SHALL BE PAINTED RED.

CITY OF HAGERSTOWN UTILITIES DEPARTMENT - WATER AND WASTEWATER DIVISIONS

THIS APPROVAL IS FOR THE DESIGN AND LAYOUT OF THE PROPOSED WATER AND WASTEWATER SYSTEM IMPROVEMENTS. ALL WATER AND WASTEWATER SYSTEM IMPROVEMENTS SHALL BE CONSTRUCTED TO THE STANDARDS IN EFFECT AT THE TIME OF CONSTRUCTION. THIS APPROVAL DOES NOT GUARANTEE AVAILABILITY OF WATER OR WASTEWATER SERVICE. WATER AND WASTEWATER SERVICE IS AVAILABLE SUBJECT TO CONFORMANCE WITH ALL POLICIES AND STANDARDS IN EFFECT AT THE TIME OF APPLICATION FOR SERVICE, PAYMENT OF FEES AND APPROVAL OF THE WATER AND/OR WASTEWATER SERVICE APPLICATION. THE WATER DIVISION DOES NOT GUARANTEE A SPECIFIC WATER PRESSURE OR FLOW AT ANY METER OR FIRE HYDRANT. THIS APPROVAL IS VALID FOR A PERIOD OF ONE YEAR.

(SIGNATURE)

(DATE)

HRG
HERBERT, ROWLAND & GRUBIC, INC.
5 NORTH MAIN STREET
SUITE 3
CHAMBERSBURG, PA 17201
717. 263.2070 | hrg-inc.com

SITE PLAN FOR MERITUS SCHOOL OF OSTEOPATHIC MEDICINE GRADUATE STUDENT HOUSING

1500 MT. AETNA ROAD
HAGERSTOWN, MD 21742
TAX MAP-50 GRID: 14 PARCEL: 1207
HAGERSTOWN WASHINGTON COUNTY MARYLAND

PROFESSIONAL CERTIFICATION:

STATE OF MARYLAND
SCOTT BERG
59144
PROFESSIONAL ENGINEER

I HEREBY CERTIFY THAT THESE DOCUMENTS WERE PREPARED OR APPROVED BY ME, AND THAT I AM DULY LICENSED PROFESSIONAL ENGINEER UNDER THE LAWS OF THE STATE OF MARYLAND. LICENSE NO. 59144, EXP. DATE: 2024-01-26

HRG PROJECT NUMBER:	R003887.0427
PLAN DATE:	2023.09.01
DRAWING SCALE:	AS SHOWN
PROJ. MANAGER:	SBB

REVISIONS

NO.	DATE	DESCRIPTION
1	2024.01.16	PER VARIOUS REVIEW AGENCY COMMENTS
2		
3		
4		
5		
6		
7		
8		
9		

SHEET TITLE:

DETAIL UTILITY PLAN

SP-23-034

SHEET: UT-DT-3

PLOT DATE: 1/16/2024 TIME: 11:12:41 AM PLOTTED BY: SCOTT BERG
FILE PATH: G:\HRG\R003887.0427\CAD\CONSTRUCTION DOCUMENTS\UT-DT-3.DWG

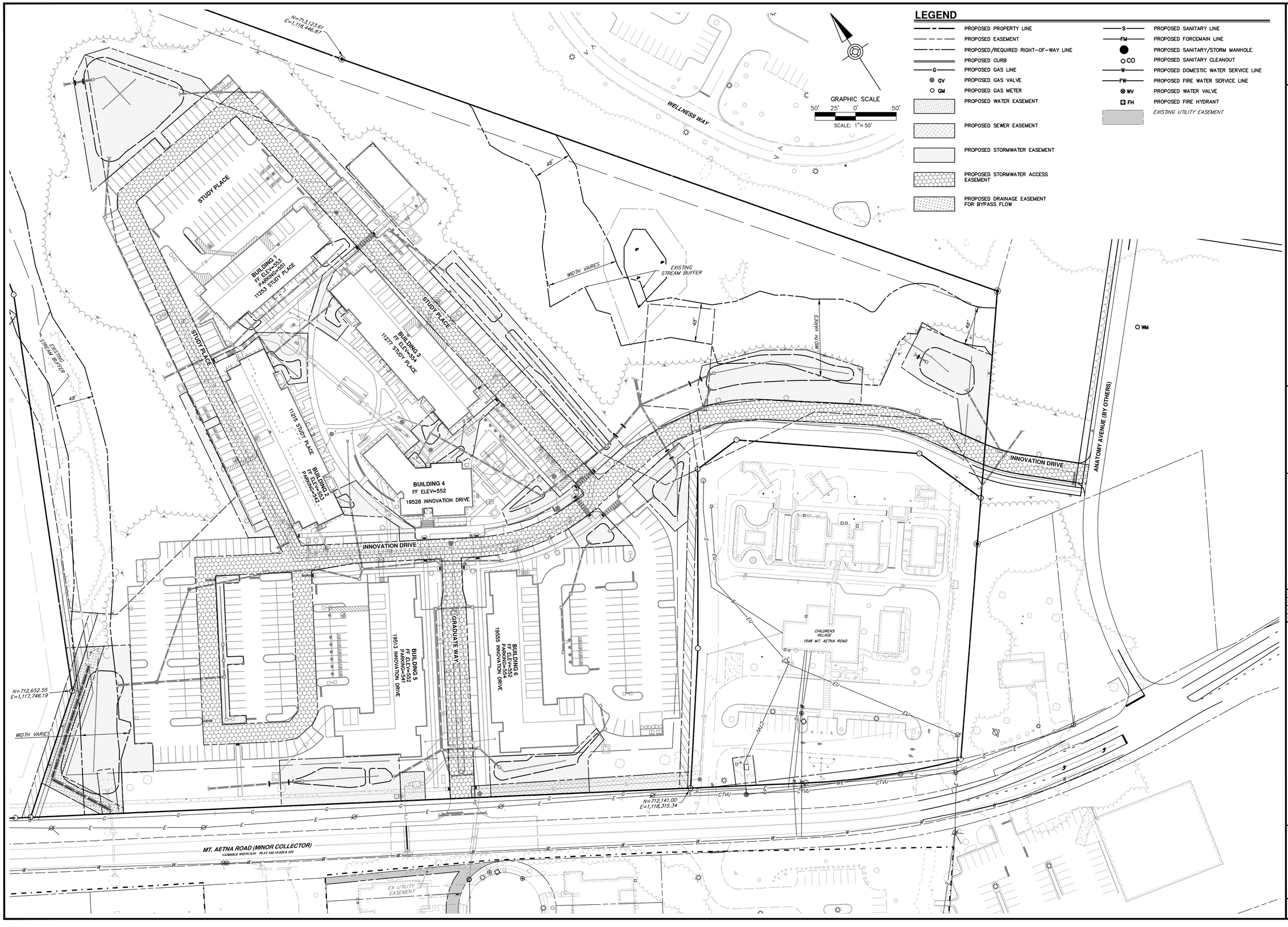

HERBERT, ROWLAND & GRUBIC, INC.
5 NORTH MAIN STREET
SUITE 3
CHAMBERSBURG, PA 17201
717. 263.2070 | hrg-inc.com

SITE PLAN
FOR
MERITUS SCHOOL OF OSTEOPATHIC MEDICINE GRADUATE STUDENT HOUSING
1500 MT. AETNA ROAD
HAGERSTOWN, MD 21742
TAX MAP-50 GRID: 14 | PARCEL: 1207
HAGERSTOWN WASHINGTON COUNTY MARYLAND

PROFESSIONAL CERTIFICATION:

STATE OF MARYLAND
SCOTT BERG
5914A
PROFESSIONAL ENGINEER

I HEREBY CERTIFY THAT THESE DOCUMENTS WERE PREPARED OR APPROVED BY ME, AND THAT I AM A DULY LICENSED PROFESSIONAL ENGINEER UNDER THE LAWS OF THE STATE OF MARYLAND. LICENSE NO. 5914A, EXP. DATE: 2024-03-26

HRG PROJECT NUMBER:	R003887.0427
PLAN DATE:	2023.09.01
DRAWING SCALE:	AS SHOWN
PROJ. MANAGER:	SBB

REVISIONS

NO.	DATE	DESCRIPTION
1	2024.01.16	PER VARIOUS REVIEW AGENCY COMMENTS
2		
3		
4		
5		
6		
7		
8		
9		

SHEET TITLE:
OVERALL EASEMENT PLAN

SP-23-034

SHEET: EAS-1

FILE: R:\CIVIL\R003887.0427 MERITUS SOM GRADUATE HOUSING\DWG\R003887.0427 MERITUS SOM GRADUATE HOUSING.DWG LAYOUT: EAS-1 PLOTTED: 1/16/2024 1:16 PM BY: SBERG

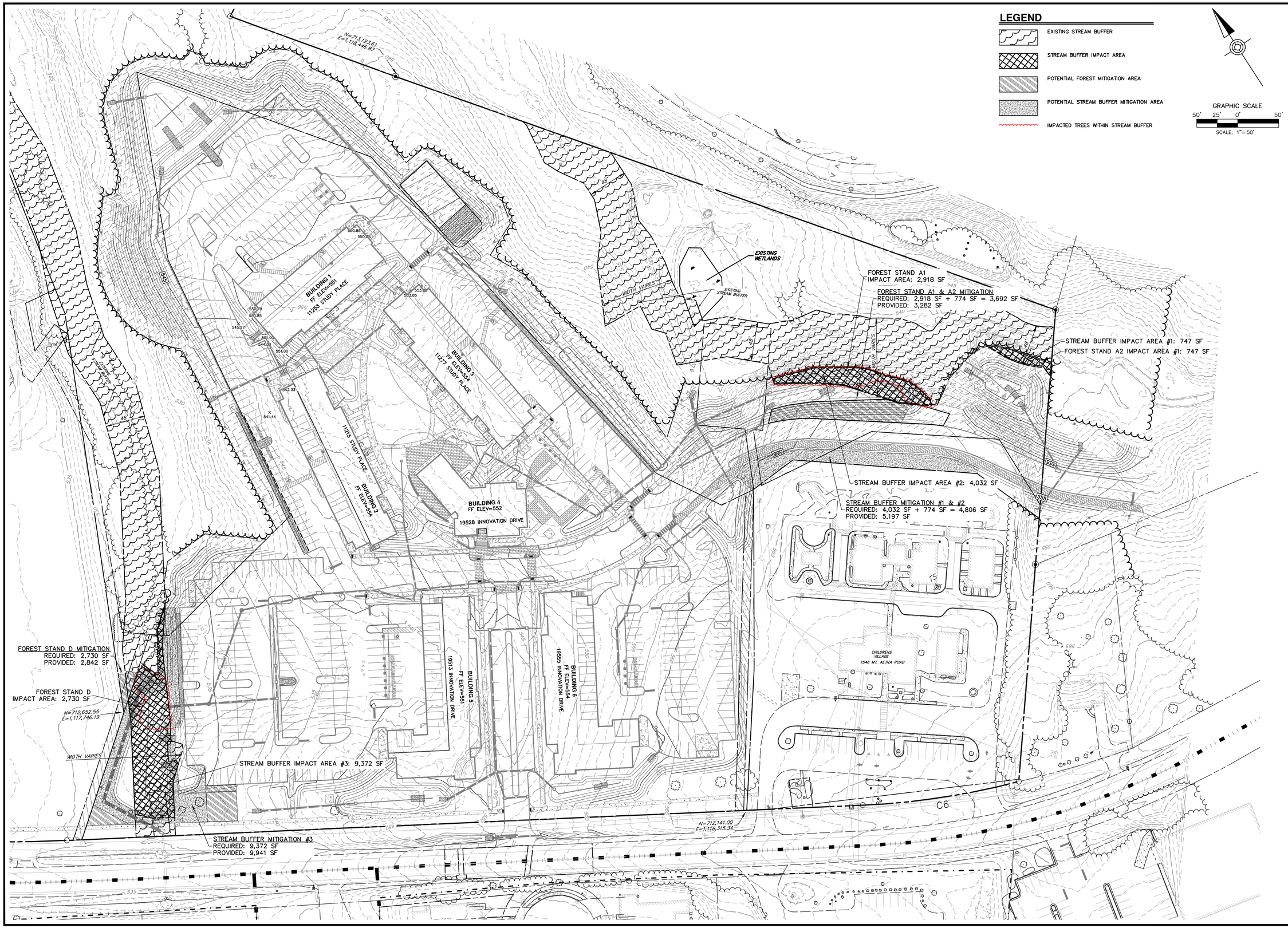

HRG
HERBERT, ROWLAND & GRUBIC, INC.
5 NORTH MAIN STREET
SUITE 3
CHAMBERSBURG, PA 17201
717. 263.2070 | hrg-inc.com

SITE PLAN
FOR
MERITUS SCHOOL OF OSTEOPATHIC MEDICINE
GRADUATE STUDENT HOUSING

1500 MT. AETNA ROAD
HAGERSTOWN, MD 21742
TAX MAP: 50 / GRID: 14 / PARCEL: 1207
HAGERSTOWN WASHINGTON COUNTY MARYLAND

PROFESSIONAL CERTIFICATION:

STATE OF MARYLAND
SCOTT BERT
59144
PROFESSIONAL ENGINEER

I HEREBY CERTIFY THAT THESE DOCUMENTS WERE PREPARED OR APPROVED BY ME, AND THAT I AM DULY LICENSED PROFESSIONAL ENGINEER UNDER THE LAWS OF THE STATE OF MARYLAND. LICENSE NO. 59144, EXP. DATE: 2024-03-28

HRG PROJECT NUMBER:	R003887.0427
PLAN DATE:	2023.09.01
DRAWING SCALE:	AS SHOWN
PROJ. MANAGER:	SBB

REVISIONS

NO.	DATE	DESCRIPTION
1	2024.01.16	PER VARIOUS REVIEW AGENCY COMMENTS
2		
3		
4		
5		
6		
7		
8		
9		

SHEET TITLE:
STREAM BUFFER MITIGATION PLAN

SP-23-034

SHEET: STRM-MIT

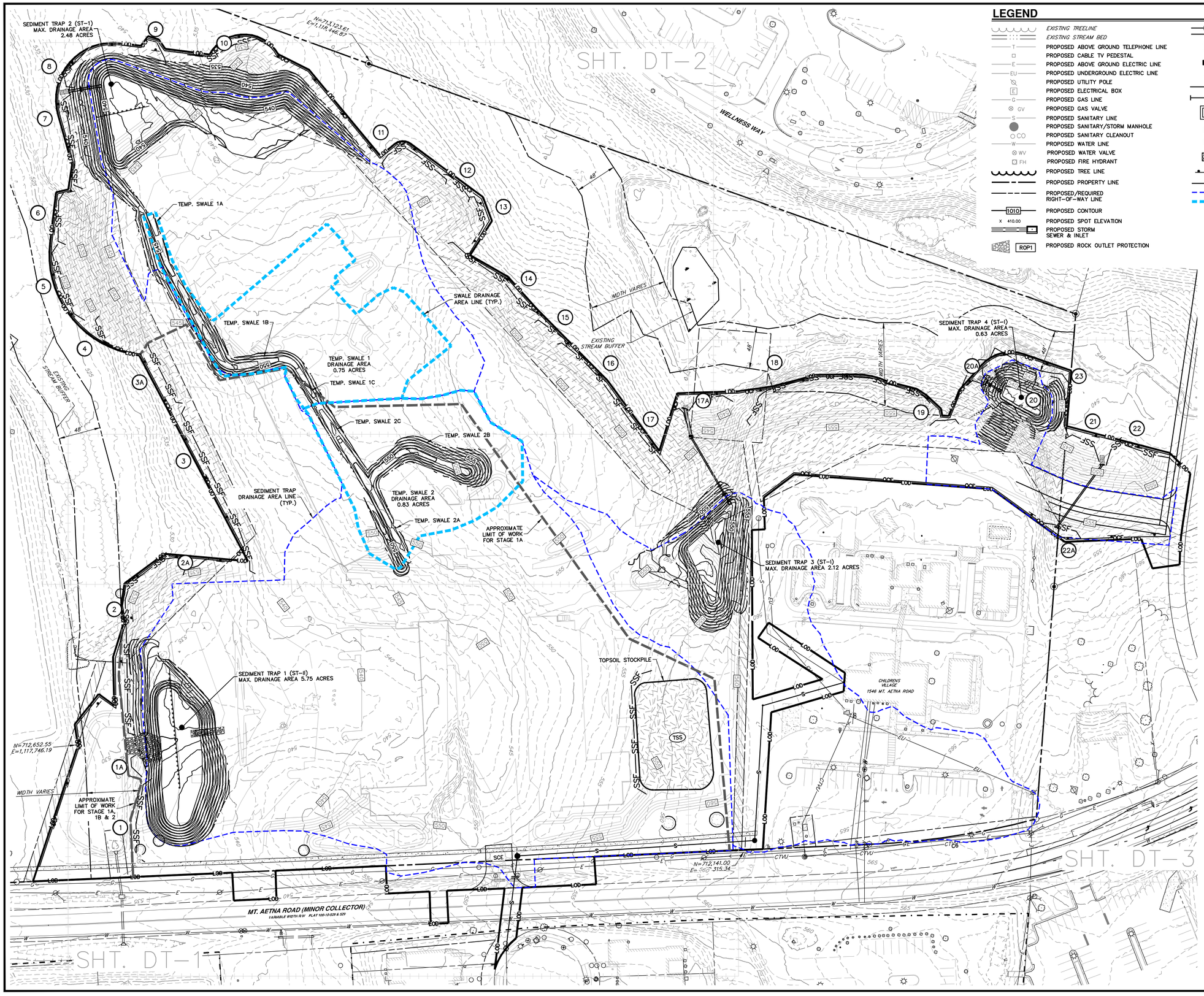

LEGEND

- EXISTING TREELINE
- EXISTING STREAM BED
- PROPOSED ABOVE GROUND TELEPHONE LINE
- PROPOSED CABLE TV PEDESTAL
- PROPOSED ABOVE GROUND ELECTRIC LINE
- PROPOSED UNDERGROUND ELECTRIC LINE
- PROPOSED UTILITY POLE
- PROPOSED ELECTRICAL BOX
- PROPOSED GAS LINE
- PROPOSED GAS VALVE
- PROPOSED SANITARY LINE
- PROPOSED SANITARY/STORM MANHOLE
- PROPOSED SANITARY CLEANOUT
- PROPOSED WATER LINE
- PROPOSED WATER VALVE
- PROPOSED FIRE HYDRANT
- PROPOSED TREE LINE
- PROPOSED PROPERTY LINE
- PROPOSED/REQUIRED RIGHT-OF-WAY LINE
- PROPOSED CONTOUR
- PROPOSED SPOT ELEVATION
- PROPOSED STORM SEWER & INLET
- PROPOSED ROCK OUTLET PROTECTION
- NPDES/LIMIT OF DISTURBANCE BOUNDARY LINE
- STANDARD INLET PROTECTION
- STABILIZED CONSTRUCTION ENTRANCE
- TOPSOIL STOCKPILE
- SILT FENCE
- SUPER SILT FENCE
- CONCRETE WASHOUT STRUCTURE
- PIPE OUTLET SEDIMENT TRAP ST I
- STONE/RIPRAP OUTLET SEDIMENT TRAP ST II
- GABION INFLOW PROTECTION
- BAFFLE BOARDS
- ORANGE CONSTRUCTION FENCE
- SEDIMENT TRAP DRAINAGE AREA LINE
- SWALE DRAINAGE AREA LINE
- LIMIT OF WORK

GRAPHIC SCALE
50' 25' 0' 50'
SCALE: 1"= 50'

NOTE:

ANY SPOIL AND/OR BORROW, MUST COME FROM AND/OR GO TO, A SITE WITH AN APPROVED AND CURRENT SOIL EROSION AND SEDIMENT CONTROL PLAN.

HRG
HERBERT, ROWLAND & GRUBIC, INC.
5 NORTH MAIN STREET
SUITE 3
CHAMBERSBURG, PA 17201
717. 263.2070 | hrg-inc.com

SITE PLAN
FOR
MERITUS SCHOOL OF OSTEOPATHIC MEDICINE GRADUATE STUDENT HOUSING
1500 MT. AETNA ROAD
HAGERSTOWN, MD 21742
TAX MAP-50 GRID: 14 PARCEL: 1207
HAGERSTOWN WASHINGTON COUNTY MARYLAND

PROFESSIONAL CERTIFICATION:

STATE OF MARYLAND
SCOTT BERY
59144
PROFESSIONAL ENGINEER

I HEREBY CERTIFY THAT THESE DOCUMENTS WERE PREPARED OR APPROVED BY ME, AND THAT I AM DULY LICENSED PROFESSIONAL ENGINEER UNDER THE LAWS OF THE STATE OF MARYLAND. LICENSE NO. 59144, EXP. DATE: 2024-03-29

HRG PROJECT NUMBER:	R003887.0427
PLAN DATE:	2023.09.01
DRAWING SCALE:	AS SHOWN
PROJ. MANAGER:	SBB

REVISIONS

NO.	DATE	DESCRIPTION
1	2024.01.16	PER VARIOUS REVIEW AGENCY COMMENTS
2		
3		
4		
5		
6		
7		
8		
9		

SHEET TITLE:
STAGE 1 OVERALL EROSION & SEDIMENT POLLUTION CONTROL PLAN

SHEET: ES-STG1-OA

SP-23-034

DETAIL SHEET KEY

SCALE: 1" = 700'

GRAPHIC SCALE

30' 15' 0' 30'

SCALE: 1" = 30'

LEGEND

- LIMIT OF WORK
- EXISTING TREELINE
- EXISTING STREAM BED
- PROPOSED ABOVE GROUND TELEPHONE LINE
- PROPOSED CABLE TV PEDESTAL
- PROPOSED ABOVE GROUND ELECTRIC LINE
- PROPOSED UNDERGROUND ELECTRIC LINE
- PROPOSED UTILITY POLE
- PROPOSED ELECTRICAL BOX
- PROPOSED GAS LINE
- PROPOSED GAS VALVE
- PROPOSED SANITARY LINE
- PROPOSED SANITARY/STORM MANHOLE
- PROPOSED SANITARY CLEANOUT
- PROPOSED WATER LINE
- PROPOSED WATER VALVE
- PROPOSED FIRE HYDRANT
- PROPOSED TREE LINE
- PROPOSED PROPERTY LINE
- PROPOSED/REQUIRED RIGHT-OF-WAY LINE
- PROPOSED CONTOUR
- PROPOSED SPOT ELEVATION
- PROPOSED STORM SEWER & INLET
- PROPOSED ROCK OUTLET PROTECTION
- NPDES/LIMIT OF DISTURBANCE BOUNDARY LINE
- STANDARD INLET PROTECTION
- STABILIZED CONSTRUCTION ENTRANCE
- TOPSOIL STOCKPILE
- SILT FENCE
- SUPER SILT FENCE
- CONCRETE WASHOUT STRUCTURE
- PIPE OUTLET SEDIMENT TRAP ST I
- STONE/RIPRAP OUTLET SEDIMENT TRAP ST II
- GABION INFLOW PROTECTION
- BAFFLE BOARDS
- ORANGE CONSTRUCTION FENCE
- LIMIT OF WORK

HRG

HERBERT, ROWLAND & GRUBIC, INC.
5 NORTH MAIN STREET
SUITE 3
CHAMBERSBURG, PA 17201
717. 263.2070 | hrg-inc.com

SITE PLAN
FOR
MERITUS SCHOOL OF OSTEOPATHIC MEDICINE GRADUATE STUDENT HOUSING

1500 MT. AETNA ROAD
HAGERSTOWN, MD 21742

TAX MAP-50 GRID: 14 | PARCEL: 1207
HAGERSTOWN WASHINGTON COUNTY MARYLAND

PROFESSIONAL CERTIFICATION:

STATE OF MARYLAND
SCOTT BERG
59144
PROFESSIONAL ENGINEER

I HEREBY CERTIFY THAT THESE DOCUMENTS WERE PREPARED OR APPROVED BY ME, AND THAT I AM DULY LICENSED PROFESSIONAL ENGINEER UNDER THE LAWS OF THE STATE OF MARYLAND. LICENSE NO. 59144, EXP. DATE: 2024-03-28

HRG PROJECT NUMBER:	R003887.0427
PLAN DATE:	2023.09.01
DRAWING SCALE:	AS SHOWN
PROJ. MANAGER:	SBB

REVISIONS

NO.	DATE	DESCRIPTION
1	2024.01.16	PER VARIOUS REVIEW AGENCY COMMENTS
2		
3		
4		
5		
6		
7		
8		
9		

SHEET TITLE:

STAGE 1 DETAIL EROSION & SEDIMENT POLLUTION CONTROL PLAN

SHEET: ES-STG1-DT-1

SP-23-034

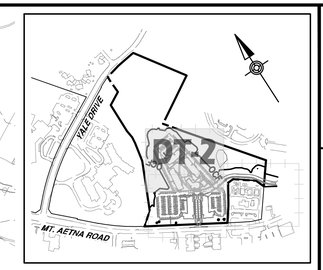

DETAIL SHEET KEY

SCALE: 1" = 700'

GRAPHIC SCALE

30' 15' 0' 30'

SCALE: 1"= 30'

LEGEND

	EXISTING TREELINE
	EXISTING STREAM BED
T	PROPOSED ABOVE GROUND TELEPHONE LINE
	PROPOSED CABLE TV PEDESTAL
E	PROPOSED ABOVE GROUND ELECTRIC LINE
EU	PROPOSED UNDERGROUND ELECTRIC LINE
	PROPOSED UTILITY POLE
E	PROPOSED ELECTRICAL BOX
G	PROPOSED GAS LINE
GV	PROPOSED GAS VALVE
S	PROPOSED SANITARY LINE
	PROPOSED SANITARY/STORM MANHOLE
CO	PROPOSED SANITARY CLEANOUT
W	PROPOSED WATER LINE
WV	PROPOSED WATER VALVE
FH	PROPOSED FIRE HYDRANT
	PROPOSED TREE LINE
	PROPOSED PROPERTY LINE
	PROPOSED/REQUIRED RIGHT-OF-WAY LINE
1010	PROPOSED CONTOUR
x 410.00	PROPOSED SPOT ELEVATION
	PROPOSED STORM SEWER & INLET
ROP1	PROPOSED ROCK OUTLET PROTECTION
NPDES LOD	NPDES/LIMIT OF DISTURBANCE BOUNDARY LINE
SP	STANDARD INLET PROTECTION
SCCB	STABILIZED CONSTRUCTION ENTRANCE
TSB	TOPSOIL STOCKPILE
SF	SILT FENCE
SSF	SUPER SILT FENCE
CWS	CONCRETE WASHOUT STRUCTURE
ST-I	PIPE OUTLET SEDIMENT TRAP ST I
ST-II	STONE/RIPRAP OUTLET SEDIMENT TRAP ST II
GP GP	GABION INFLOW PROTECTION
BB	BAFFLE BOARDS
OCF	ORANGE CONSTRUCTION FENCE LIMIT OF WORK

HRG

HERBERT, ROWLAND & GRUBIC, INC.
5 NORTH MAIN STREET
SUITE 3
CHAMBERSBURG, PA 17201
717. 263.2070 | hrg-inc.com

SITE PLAN
FOR
MERITUS SCHOOL OF OSTEOPATHIC MEDICINE GRADUATE STUDENT HOUSING

1500 MT. AETNA ROAD
HAGERSTOWN, MD 21742

TAX MAP-50 GRID: 14 PARCEL: 1207
HAGERSTOWN WASHINGTON COUNTY MARYLAND

PROFESSIONAL CERTIFICATION:

STATE OF MARYLAND
SCOTT BERG
5914A
PROFESSIONAL ENGINEER

I HEREBY CERTIFY THAT THESE DOCUMENTS WERE PREPARED OR APPROVED BY ME, AND THAT I AM A DULY LICENSED PROFESSIONAL ENGINEER UNDER THE LAWS OF THE STATE OF MARYLAND. LICENSE NO. 59144, EXP. DATE: 2024-03-28

HRG PROJECT NUMBER:	R003887.0427
PLAN DATE:	2023.09.01
DRAWING SCALE:	AS SHOWN
PROJ. MANAGER:	SBB

REVISIONS

NO.	DATE	DESCRIPTION
1	2024.01.16	PER VARIOUS REVIEW AGENCY COMMENTS
2		
3		
4		
5		
6		
7		
8		
9		

SHEET TITLE:

STAGE 1 DETAIL EROSION & SEDIMENT POLLUTION CONTROL PLAN

SHEET: ES-STG1-DT-2

SP-23-034

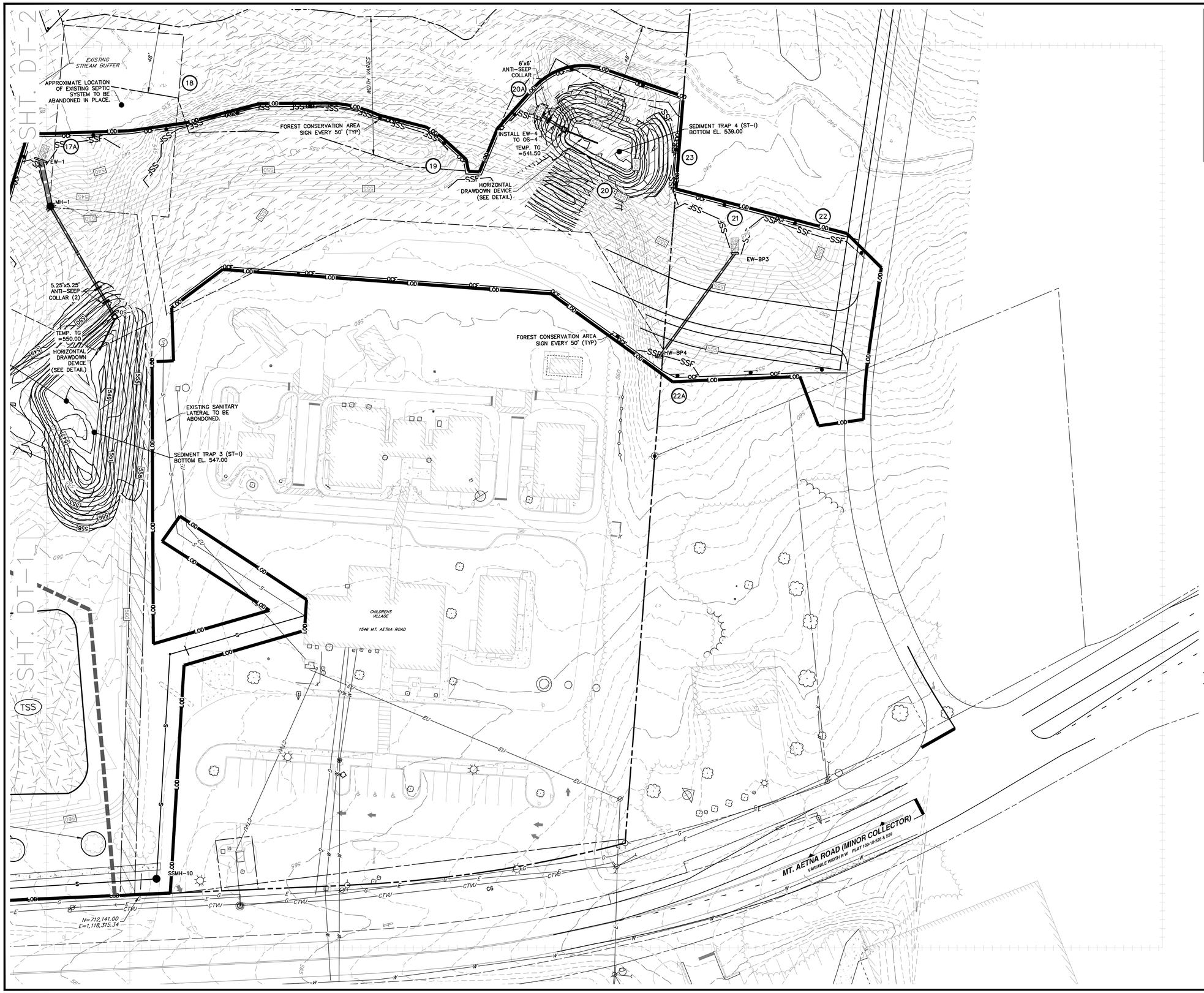

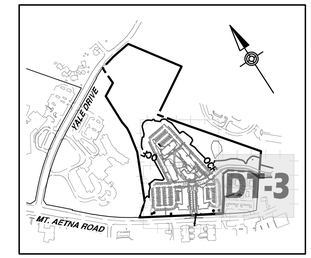

DETAIL SHEET KEY

SCALE: 1" = 700'

GRAPHIC SCALE

30' 15' 0' 30'

SCALE: 1"= 30'

LEGEND

	EXISTING TREELINE
	EXISTING STREAM BED
T	PROPOSED ABOVE GROUND TELEPHONE LINE
	PROPOSED CABLE TV PEDESTAL
E	PROPOSED ABOVE GROUND ELECTRIC LINE
EU	PROPOSED UNDERGROUND ELECTRIC LINE
	PROPOSED UTILITY POLE
E	PROPOSED ELECTRICAL BOX
G	PROPOSED GAS LINE
GV	PROPOSED GAS VALVE
S	PROPOSED SANITARY LINE
	PROPOSED SANITARY/STORM MANHOLE
CO	PROPOSED SANITARY CLEANOUT
W	PROPOSED WATER LINE
WV	PROPOSED WATER VALVE
FH	PROPOSED FIRE HYDRANT
	PROPOSED TREE LINE
	PROPOSED PROPERTY LINE
	PROPOSED/REQUIRED RIGHT-OF-WAY LINE
1010	PROPOSED CONTOUR
X 410.00	PROPOSED SPOT ELEVATION
	PROPOSED STORM SEWER & INLET
ROP1	PROPOSED ROCK OUTLET PROTECTION
NPDES LOD	NPDES/LIMIT OF DISTURBANCE BOUNDARY LINE
SP	STANDARD INLET PROTECTION
SCE	STABILIZED CONSTRUCTION ENTRANCE
TSS	TOPSOIL STOCKPILE
SF	SILT FENCE
SSF	SUPER SILT FENCE
CWS	CONCRETE WASHOUT STRUCTURE
ST-I	PIPE OUTLET SEDIMENT TRAP ST I
ST-II	STONE/RIPRAP OUTLET SEDIMENT TRAP ST II
GP	GABION INFLOW PROTECTION
BB	BAFFLE BOARDS
OCF	ORANGE CONSTRUCTION FENCE

HRG

HERBERT, ROWLAND & GRUBIC, INC.
5 NORTH MAIN STREET
SUITE 3
CHAMBERSBURG, PA 17201
717. 263.2070 | hrg-inc.com

SITE PLAN FOR MERITUS SCHOOL OF OSTEOPATHIC MEDICINE GRADUATE STUDENT HOUSING

1500 MT. AETNA ROAD
HAGERSTOWN, MD 21742
TAX MAP-50 GRID: 14 | PARCEL: 1207
HAGERSTOWN WASHINGTON COUNTY MARYLAND

PROFESSIONAL CERTIFICATION:

STATE OF MARYLAND — SCOTT BERRY — 59144 — PROFESSIONAL ENGINEER

I HEREBY CERTIFY THAT THESE DOCUMENTS WERE PREPARED OR APPROVED BY ME, AND THAT I AM DULY LICENSED PROFESSIONAL ENGINEER UNDER THE LAWS OF THE STATE OF MARYLAND. LICENSE NO. 59144, EXP. DATE: 2024-03-28

HRG PROJECT NUMBER:	R003887.0427
PLAN DATE:	2023.09.01
DRAWING SCALE:	AS SHOWN
PROJ. MANAGER:	SBB

REVISIONS

NO.	DATE	DESCRIPTION
1	2024.01.16	PER VARIOUS REVIEW AGENCY COMMENTS
2		
3		
4		
5		
6		
7		
8		
9		

SHEET TITLE:

STAGE 1 DETAIL EROSION & SEDIMENT POLLUTION CONTROL PLAN

SHEET: ES-STG1-DT-3

SP-23-034

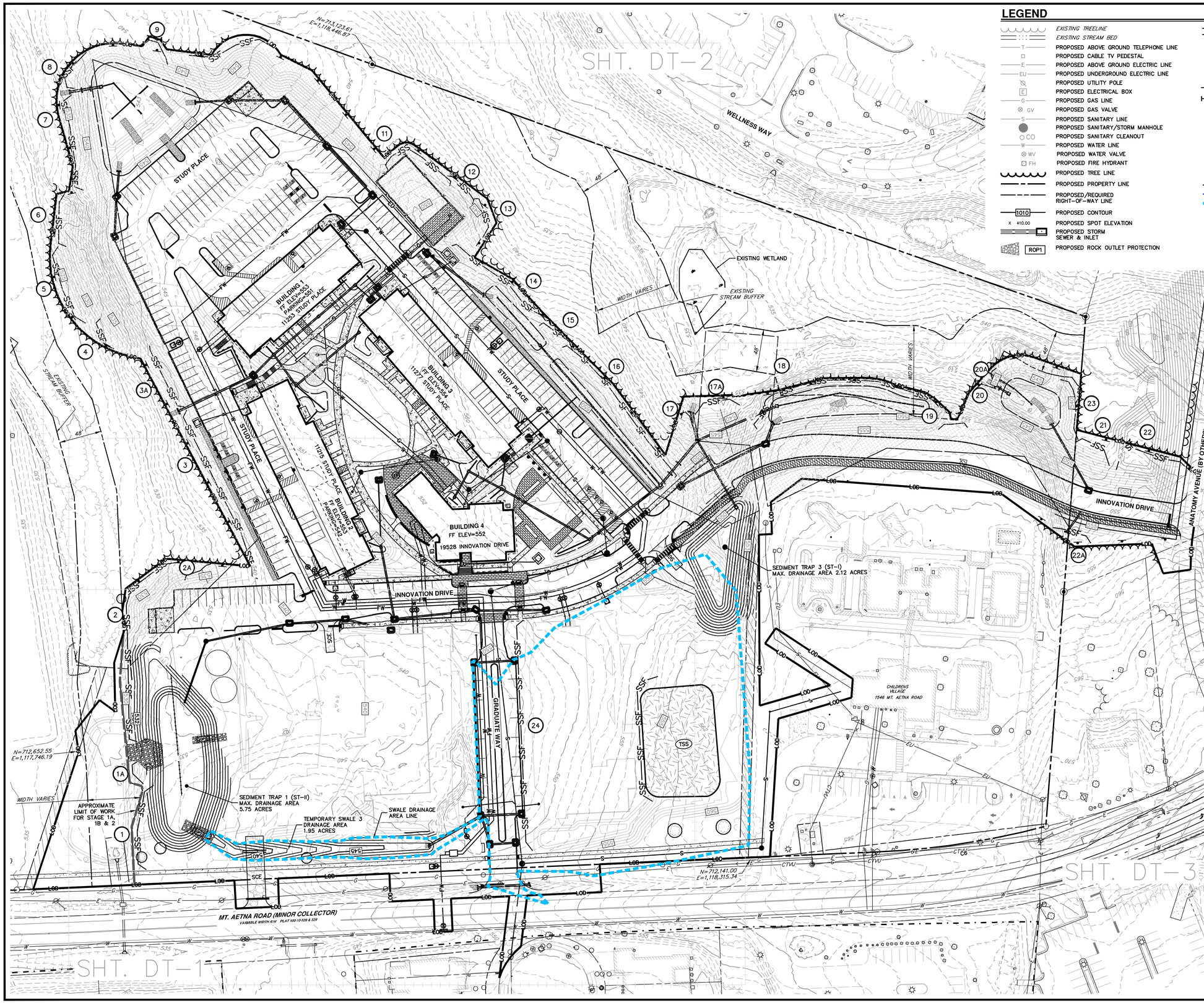

LEGEND

- EXISTING TREELINE
- EXISTING STREAM BED
- PROPOSED ABOVE GROUND TELEPHONE LINE
- PROPOSED CABLE TV PEDESTAL
- PROPOSED ABOVE GROUND ELECTRIC LINE
- PROPOSED UNDERGROUND ELECTRIC LINE
- PROPOSED UTILITY POLE
- PROPOSED ELECTRICAL BOX
- PROPOSED GAS LINE
- PROPOSED GAS VALVE
- PROPOSED SANITARY LINE
- PROPOSED SANITARY/STORM MANHOLE
- PROPOSED SANITARY CLEANOUT
- PROPOSED WATER LINE
- PROPOSED WATER VALVE
- PROPOSED FIRE HYDRANT
- PROPOSED TREE LINE
- PROPOSED PROPERTY LINE
- PROPOSED/REQUIRED RIGHT-OF-WAY LINE
- PROPOSED CONTOUR
- PROPOSED SPOT ELEVATION
- PROPOSED STORM SEWER & INLET
- PROPOSED ROCK OUTLET PROTECTION
- NPDES/LIMIT OF DISTURBANCE BOUNDARY LINE
- STANDARD INLET PROTECTION
- STABILIZED CONSTRUCTION ENTRANCE
- TOPSOIL STOCKPILE
- SILT FENCE
- SUPER SILT FENCE
- CONCRETE WASHOUT STRUCTURE
- PIPE OUTLET SEDIMENT TRAP ST I
- STONE/RIPRAP OUTLET SEDIMENT TRAP ST II
- GABION INFLOW PROTECTION
- BAFFLE BOARDS
- ORANGE CONSTRUCTION FENCE
- SEDIMENT TRAP DRAINAGE AREA LINE
- SWALE DRAINAGE AREA LINE
- LIMIT OF WORK

GRAPHIC SCALE
50' 25' 0' 50'
SCALE: 1"= 50'

NOTE:

ANY SPOIL AND/OR BORROW, MUST COME FROM AND/OR GO TO, A SITE WITH AN APPROVED AND CURRENT SOIL EROSION AND SEDIMENT CONTROL PLAN.

HRG
HERBERT, ROWLAND & GRUBIC, INC.
5 NORTH MAIN STREET
SUITE 3
CHAMBERSBURG, PA 17201
717. 263.2070 | hrg-inc.com

SITE PLAN
FOR
MERITUS SCHOOL OF OSTEOPATHIC MEDICINE GRADUATE STUDENT HOUSING
1500 MT. AETNA ROAD
HAGERSTOWN, MD 21742
TAX MAP-50 GRID: 14 PARCEL: 1207
HAGERSTOWN WASHINGTON COUNTY MARYLAND

PROFESSIONAL CERTIFICATION:

STATE OF MARYLAND
SCOTT BERG
59144
PROFESSIONAL ENGINEER

I HEREBY CERTIFY THAT THESE DOCUMENTS WERE PREPARED OR APPROVED BY ME, AND THAT I AM DULY LICENSED PROFESSIONAL ENGINEER UNDER THE LAWS OF THE STATE OF MARYLAND. LICENSE NO. 59144, EXP. DATE: 2024-03-28

HRG PROJECT NUMBER:	R003887.0427
PLAN DATE:	2023.09.01
DRAWING SCALE:	AS SHOWN
PROJ. MANAGER:	SBB

REVISIONS

NO.	DATE	DESCRIPTION
1	2024.01.16	PER VARIOUS REVIEW AGENCY COMMENTS
2		
3		
4		
5		
6		
7		
8		
9		

SHEET TITLE:
STAGE 2 OVERALL EROSION & SEDIMENT POLLUTION CONTROL PLAN

SHEET: ES-STG2-OA

SP-23-034

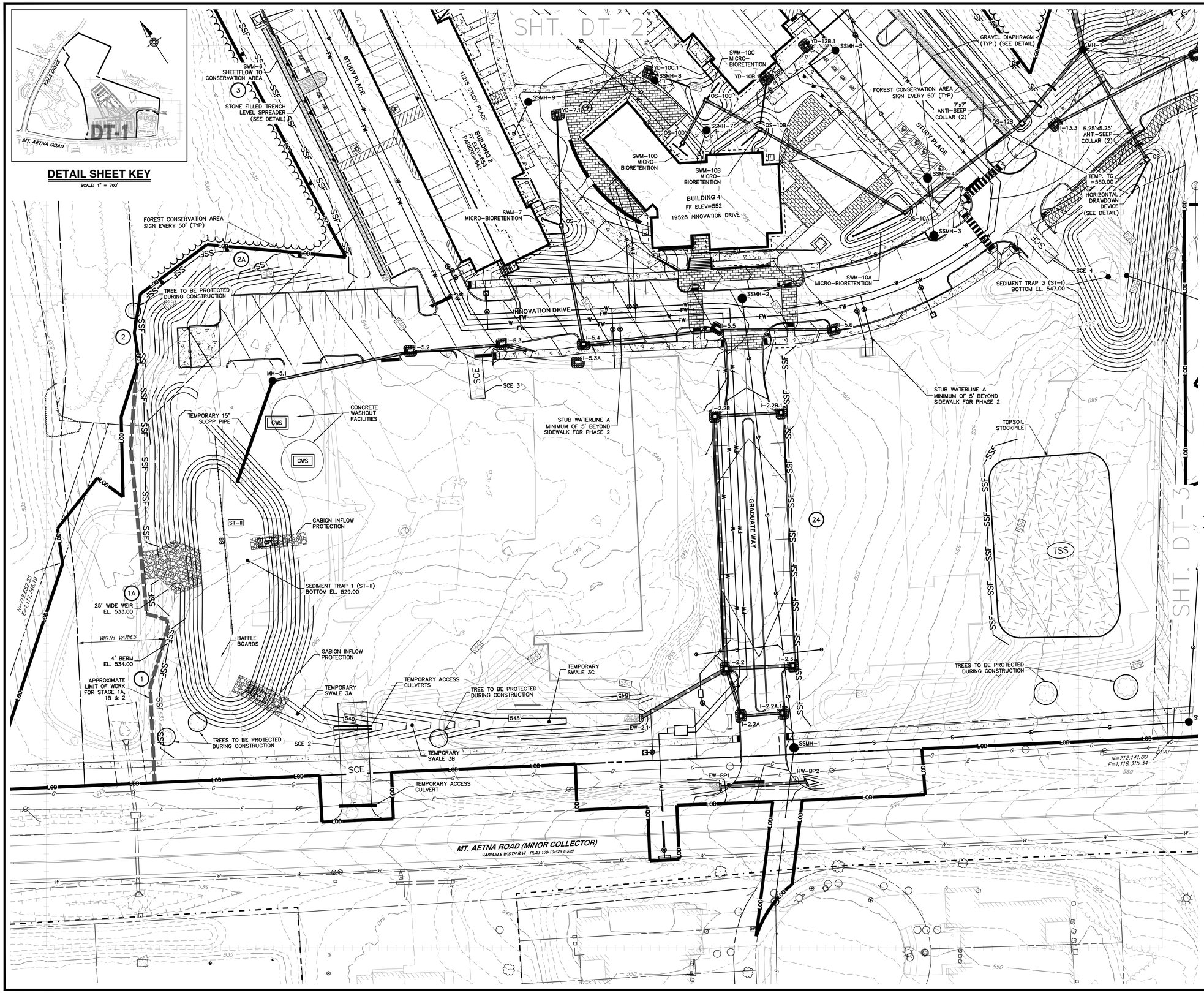

LEGEND

- EXISTING TREELINE
- EXISTING STREAM BED
- PROPOSED ABOVE GROUND TELEPHONE LINE
- PROPOSED CABLE TV PEDESTAL
- PROPOSED ABOVE GROUND ELECTRIC LINE
- PROPOSED UNDERGROUND ELECTRIC LINE
- PROPOSED UTILITY POLE
- PROPOSED ELECTRICAL BOX
- PROPOSED GAS LINE
- PROPOSED GAS VALVE
- PROPOSED SANITARY LINE
- PROPOSED SANITARY/STORM MANHOLE
- PROPOSED SANITARY CLEANOUT
- PROPOSED WATER LINE
- PROPOSED WATER VALVE
- PROPOSED FIRE HYDRANT
- PROPOSED TREE LINE
- PROPOSED PROPERTY LINE
- PROPOSED/REQUIRED RIGHT-OF-WAY LINE
- PROPOSED CONTOUR
- PROPOSED SPOT ELEVATION
- PROPOSED STORM SEWER & INLET
- PROPOSED ROCK OUTLET PROTECTION
- NPDES/LIMIT OF DISTURBANCE BOUNDARY LINE
- STANDARD INLET PROTECTION
- STABILIZED CONSTRUCTION ENTRANCE
- TOPSOIL STOCKPILE
- SILT FENCE
- SUPER SILT FENCE
- CONCRETE WASHOUT STRUCTURE
- PIPE OUTLET SEDIMENT TRAP ST I
- STONE/RIPRAP OUTLET SEDIMENT TRAP ST II
- GABION INFLOW PROTECTION
- BAFFLE BOARDS
- ORANGE CONSTRUCTION FENCE LIMIT OF WORK

HRG
HERBERT, ROWLAND & GRUBIC, INC.
5 NORTH MAIN STREET
SUITE 3
CHAMBERSBURG, PA 17201
717. 263.2070 | hrg-inc.com

SITE PLAN FOR MERITUS SCHOOL OF OSTEOPATHIC MEDICINE GRADUATE STUDENT HOUSING

1500 MT. AETNA ROAD
HAGERSTOWN, MD 21742
TAX MAP-50 GRID: 14 PARCEL: 1207
HAGERSTOWN WASHINGTON COUNTY MARYLAND

PROFESSIONAL CERTIFICATION:

STATE OF MARYLAND
SCOTT BERG
59144
PROFESSIONAL ENGINEER

I HEREBY CERTIFY THAT THESE DOCUMENTS WERE PREPARED OR APPROVED BY ME, AND THAT I AM DULY LICENSED PROFESSIONAL ENGINEER UNDER THE LAWS OF THE STATE OF MARYLAND. LICENSE NO. 59144, EXP. DATE: 2024-03-28

HRG PROJECT NUMBER:	R003887.0427
PLAN DATE:	2023.09.01
DRAWING SCALE:	AS SHOWN
PROJ. MANAGER:	SBB

REVISIONS

NO.	DATE	DESCRIPTION
1	2024.01.16	PER VARIOUS REVIEW AGENCY COMMENTS
2		
3		
4		
5		
6		
7		
8		
9		

SHEET TITLE:

STAGE 2 DETAIL EROSION & SEDIMENT POLLUTION CONTROL PLAN

SHEET: ES-STG2-DT-1

SP-23-034

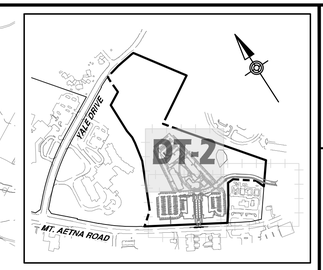

DETAIL SHEET KEY

SCALE: 1" = 700'

GRAPHIC SCALE

30' 15' 0' 30'

SCALE: 1"= 30'

LEGEND

	EXISTING TREELINE
	EXISTING STREAM BED
T	PROPOSED ABOVE GROUND TELEPHONE LINE
	PROPOSED CABLE TV PEDESTAL
E	PROPOSED ABOVE GROUND ELECTRIC LINE
EU	PROPOSED UNDERGROUND ELECTRIC LINE
	PROPOSED UTILITY POLE
E	PROPOSED ELECTRICAL BOX
G	PROPOSED GAS LINE
GV	PROPOSED GAS VALVE
S	PROPOSED SANITARY LINE
	PROPOSED SANITARY/STORM MANHOLE
CO	PROPOSED SANITARY CLEANOUT
W	PROPOSED WATER LINE
WV	PROPOSED WATER VALVE
FH	PROPOSED FIRE HYDRANT
	PROPOSED TREE LINE
	PROPOSED PROPERTY LINE
	PROPOSED/REQUIRED RIGHT-OF-WAY LINE
1010	PROPOSED CONTOUR
x 410.00	PROPOSED SPOT ELEVATION
	PROPOSED STORM SEWER & INLET
ROP1	PROPOSED ROCK OUTLET PROTECTION
NPDES LOD	NPDES/LIMIT OF DISTURBANCE BOUNDARY LINE
SP	STANDARD INLET PROTECTION
SCE	STABILIZED CONSTRUCTION ENTRANCE
TSS	TOPSOIL STOCKPILE
SF	SILT FENCE
SSF	SUPER SILT FENCE
CWS	CONCRETE WASHOUT STRUCTURE
ST-I	PIPE OUTLET SEDIMENT TRAP ST I
ST-II	STONE/RIPRAP OUTLET SEDIMENT TRAP ST II
GP	GABION INFLOW PROTECTION
BB	BAFFLE BOARDS
OCF	ORANGE CONSTRUCTION FENCE

HRG

HERBERT, ROWLAND & GRUBIC, INC.
5 NORTH MAIN STREET
SUITE 3
CHAMBERSBURG, PA 17201
717. 263.2070 | hrg-inc.com

SITE PLAN
FOR
MERITUS SCHOOL OF OSTEOPATHIC MEDICINE GRADUATE STUDENT HOUSING

1500 MT. AETNA ROAD
HAGERSTOWN, MD 21742
TAX MAP-50 GRID: 14 PARCEL: 1207
HAGERSTOWN WASHINGTON COUNTY MARYLAND

PROFESSIONAL CERTIFICATION:

STATE OF MARYLAND — SCOTT BERG — 5914A — PROFESSIONAL ENGINEER

I HEREBY CERTIFY THAT THESE DOCUMENTS WERE PREPARED OR APPROVED BY ME, AND THAT I AM DULY LICENSED PROFESSIONAL ENGINEER UNDER THE LAWS OF THE STATE OF MARYLAND. LICENSE NO. 59144, EXP. DATE: 2024-07-30

HRG PROJECT NUMBER:	R003887.0427
PLAN DATE:	2023.09.01
DRAWING SCALE:	AS SHOWN
PROJ. MANAGER:	SBB

REVISIONS

NO.	DATE	DESCRIPTION
1	2024.01.16	PER VARIOUS REVIEW AGENCY COMMENTS
2		
3		
4		
5		
6		
7		
8		
9		

SHEET TITLE:

STAGE 2 DETAIL EROSION & SEDIMENT POLLUTION CONTROL PLAN

SHEET: ES-STG2-DT-2

SP-23-034

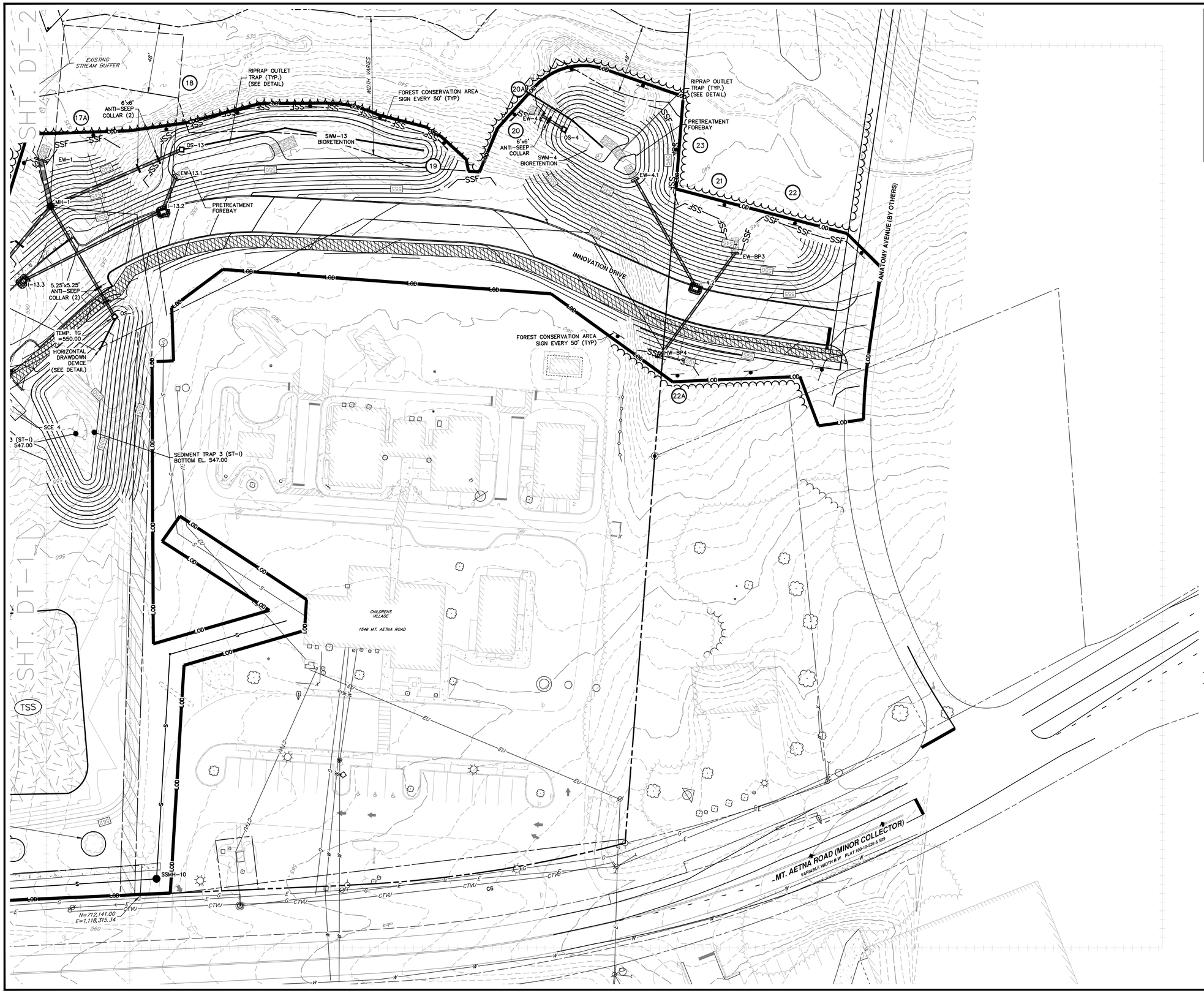

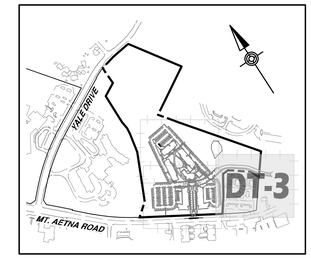

DETAIL SHEET KEY

SCALE: 1" = 700'

GRAPHIC SCALE

30' 15' 0' 30'

SCALE: 1"= 30'

LEGEND

- EXISTING TREELINE
- EXISTING STREAM BED
- PROPOSED ABOVE GROUND TELEPHONE LINE
- PROPOSED CABLE TV PEDESTAL
- PROPOSED ABOVE GROUND ELECTRIC LINE
- PROPOSED UNDERGROUND ELECTRIC LINE
- PROPOSED UTILITY POLE
- PROPOSED ELECTRICAL BOX
- PROPOSED GAS LINE
- PROPOSED GAS VALVE
- PROPOSED SANITARY LINE
- PROPOSED SANITARY/STORM MANHOLE
- PROPOSED SANITARY CLEANOUT
- PROPOSED WATER LINE
- PROPOSED WATER VALVE
- PROPOSED FIRE HYDRANT
- PROPOSED TREE LINE
- PROPOSED PROPERTY LINE
- PROPOSED/REQUIRED RIGHT-OF-WAY LINE
- PROPOSED CONTOUR
- PROPOSED SPOT ELEVATION
- PROPOSED STORM SEWER & INLET
- PROPOSED ROCK OUTLET PROTECTION
- NPDES/LIMIT OF DISTURBANCE BOUNDARY LINE
- STANDARD INLET PROTECTION
- STABILIZED CONSTRUCTION ENTRANCE
- TOPSOIL STOCKPILE
- SILT FENCE
- SUPER SILT FENCE
- CONCRETE WASHOUT STRUCTURE
- PIPE OUTLET SEDIMENT TRAP ST I
- STONE/RIPRAP OUTLET SEDIMENT TRAP ST II
- GABION INFLOW PROTECTION
- BAFFLE BOARDS
- ORANGE CONSTRUCTION FENCE

HRG
HERBERT, ROWLAND & GRUBIC, INC.
5 NORTH MAIN STREET
SUITE 3
CHAMBERSBURG, PA 17201
717. 263.2070 | hrg-inc.com

SITE PLAN FOR MERITUS SCHOOL OF OSTEOPATHIC MEDICINE GRADUATE STUDENT HOUSING

1500 MT. AETNA ROAD
HAGERSTOWN, MD 21742
TAX MAP: 50 / GRID: 14 / PARCEL: 1207
HAGERSTOWN WASHINGTON COUNTY MARYLAND

PROFESSIONAL CERTIFICATION:

STATE OF MARYLAND SCOTT BERT 59144 PROFESSIONAL ENGINEER

I HEREBY CERTIFY THAT THESE DOCUMENTS WERE PREPARED OR APPROVED BY ME, AND THAT I AM DULY LICENSED PROFESSIONAL ENGINEER UNDER THE LAWS OF THE STATE OF MARYLAND. LICENSE NO. 59144, EXP. DATE: 2024-03-28

HRG PROJECT NUMBER:	R003887.0427
PLAN DATE:	2023.09.01
DRAWING SCALE:	AS SHOWN
PROJ. MANAGER:	SBB

REVISIONS

NO.	DATE	DESCRIPTION
1	2024.01.16	PER VARIOUS REVIEW AGENCY COMMENTS
2		
3		
4		
5		
6		
7		
8		
9		

SHEET TITLE:

STAGE 2 DETAIL EROSION & SEDIMENT POLLUTION CONTROL PLAN

SHEET: ES-STG2-DT-3

SP-23-034

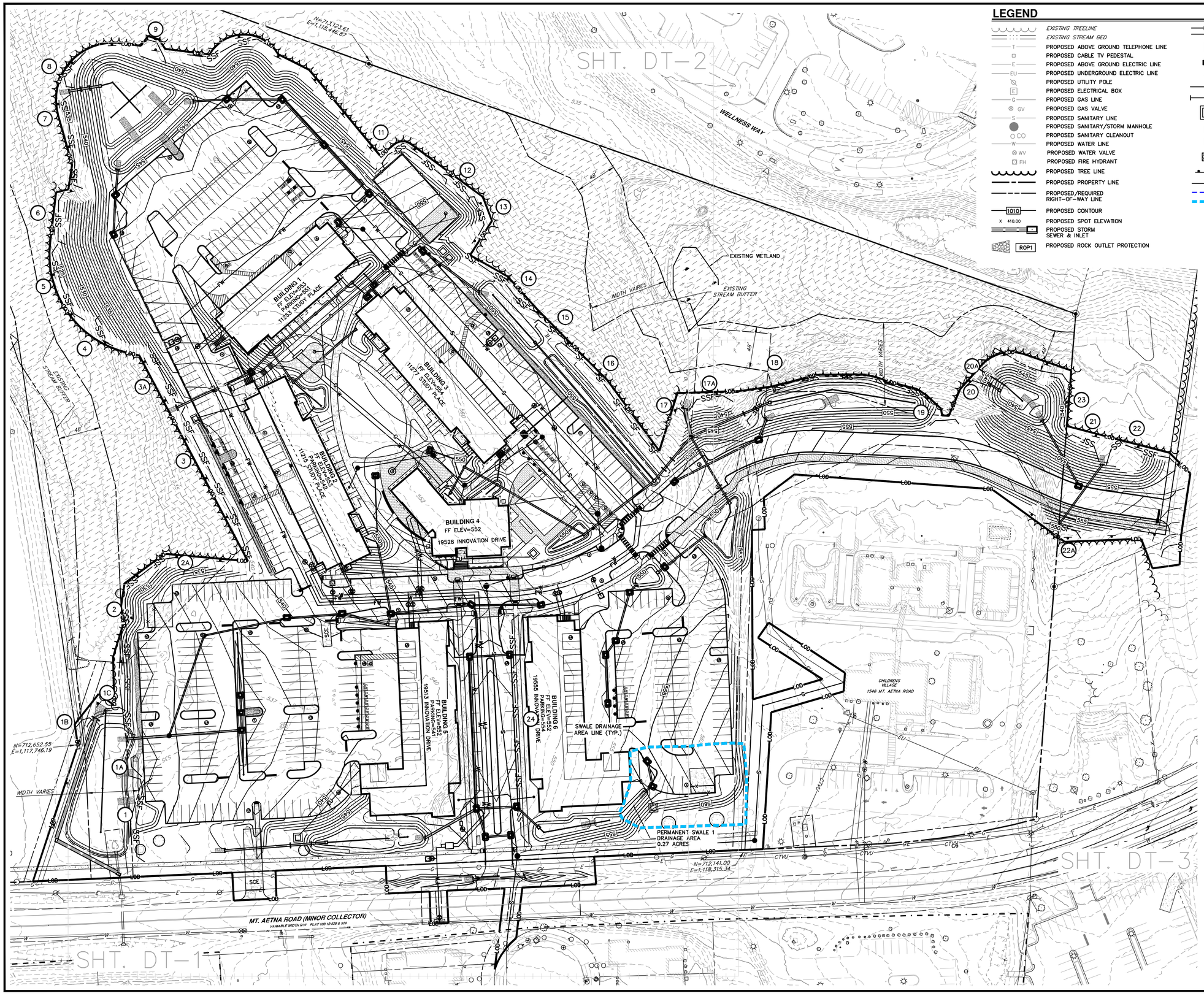

LEGEND

- EXISTING TREELINE
- EXISTING STREAM BED
- PROPOSED ABOVE GROUND TELEPHONE LINE
- PROPOSED CABLE TV PEDESTAL
- PROPOSED ABOVE GROUND ELECTRIC LINE
- PROPOSED UNDERGROUND ELECTRIC LINE
- PROPOSED UTILITY POLE
- PROPOSED ELECTRICAL BOX
- PROPOSED GAS LINE
- PROPOSED GAS VALVE
- PROPOSED SANITARY LINE
- PROPOSED SANITARY/STORM MANHOLE
- PROPOSED SANITARY CLEANOUT
- PROPOSED WATER LINE
- PROPOSED WATER VALVE
- PROPOSED FIRE HYDRANT
- PROPOSED TREE LINE
- PROPOSED PROPERTY LINE
- PROPOSED/REQUIRED RIGHT-OF-WAY LINE
- PROPOSED CONTOUR
- PROPOSED SPOT ELEVATION
- PROPOSED STORM SEWER & INLET
- PROPOSED ROCK OUTLET PROTECTION
- NPDES/LIMIT OF DISTURBANCE BOUNDARY LINE
- STANDARD INLET PROTECTION
- STABILIZED CONSTRUCTION ENTRANCE
- TOPSOIL STOCKPILE
- SILT FENCE
- SUPER SILT FENCE
- CONCRETE WASHOUT STRUCTURE
- PIPE OUTLET SEDIMENT TRAP ST I
- STONE/RIPRAP OUTLET SEDIMENT TRAP ST II
- GABION INFLOW PROTECTION
- BAFFLE BOARDS
- ORANGE CONSTRUCTION FENCE
- SEDIMENT TRAP DRAINAGE AREA LINE
- SWALE DRAINAGE AREA LINE

NOTE:

ANY SPOIL AND/OR BORROW, MUST COME FROM AND/OR GO TO, A SITE WITH AN APPROVED AND CURRENT SOIL EROSION AND SEDIMENT CONTROL PLAN.

HRG

HERBERT, ROWLAND & GRUBIC, INC.
5 NORTH MAIN STREET
SUITE 3
CHAMBERSBURG, PA 17201
717. 263.2070 | hrg-inc.com

SITE PLAN FOR MERITUS SCHOOL OF OSTEOPATHIC MEDICINE GRADUATE STUDENT HOUSING

1500 MT. AETNA ROAD
HAGERSTOWN, MD 21742
TAX MAP-50 GRID: 14 PARCEL: 1207
HAGERSTOWN WASHINGTON COUNTY MARYLAND

PROFESSIONAL CERTIFICATION:

STATE OF MARYLAND
SCOTT BERG
59144
PROFESSIONAL ENGINEER

I HEREBY CERTIFY THAT THESE DOCUMENTS WERE PREPARED OR APPROVED BY ME, AND THAT I AM DULY LICENSED PROFESSIONAL ENGINEER UNDER THE LAWS OF THE STATE OF MARYLAND. LICENSE NO. 59144, EXP. DATE: 2024-03-29

HRG PROJECT NUMBER:	R003887.0427
PLAN DATE:	2023.09.01
DRAWING SCALE:	AS SHOWN
PROJ. MANAGER:	SBB

REVISIONS

NO.	DATE	DESCRIPTION
1	2024.01.16	PER VARIOUS REVIEW AGENCY COMMENTS
2		
3		
4		
5		
6		
7		
8		
9		

SHEET TITLE:

STAGE 3 OVERALL EROSION & SEDIMENT POLLUTION CONTROL PLAN

SHEET: ES-STG3-OA

SP-23-034

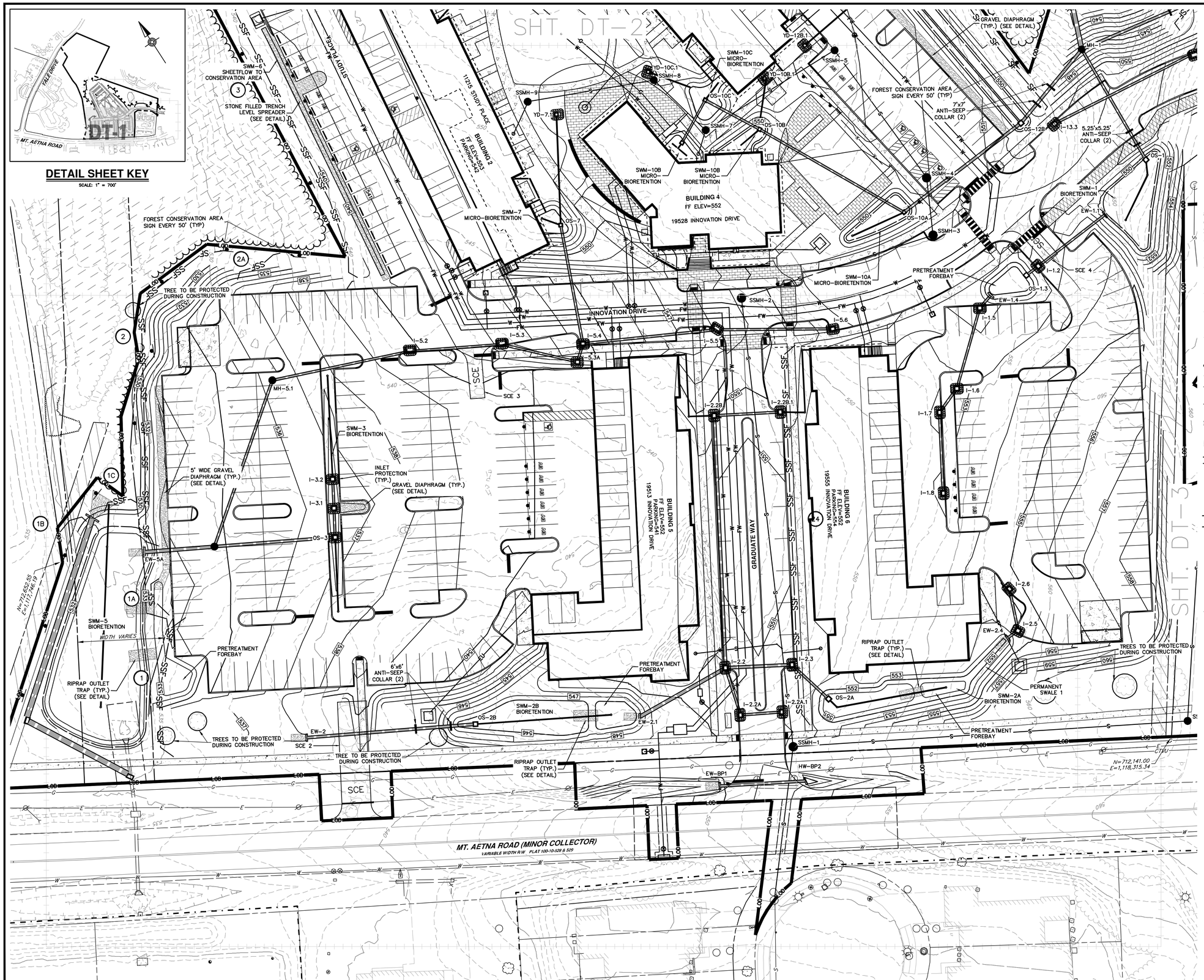

GRAPHIC SCALE

30' 15' 0' 30'

SCALE: 1" = 30'

LEGEND

	EXISTING TREELINE
	EXISTING STREAM BED
T	PROPOSED ABOVE GROUND TELEPHONE LINE
	PROPOSED CABLE TV PEDESTAL
E	PROPOSED ABOVE GROUND ELECTRIC LINE
EU	PROPOSED UNDERGROUND ELECTRIC LINE
	PROPOSED UTILITY POLE
E	PROPOSED ELECTRICAL BOX
G	PROPOSED GAS LINE
GV	PROPOSED GAS VALVE
S	PROPOSED SANITARY LINE
	PROPOSED SANITARY/STORM MANHOLE
CO	PROPOSED SANITARY CLEANOUT
W	PROPOSED WATER LINE
WV	PROPOSED WATER VALVE
FH	PROPOSED FIRE HYDRANT
	PROPOSED TREE LINE
	PROPOSED PROPERTY LINE
	PROPOSED/REQUIRED RIGHT-OF-WAY LINE
1010	PROPOSED CONTOUR
X 410.00	PROPOSED SPOT ELEVATION
	PROPOSED STORM SEWER & INLET
ROP1	PROPOSED ROCK OUTLET PROTECTION
NPDES LOD	NPDES/LIMIT OF DISTURBANCE BOUNDARY LINE
SP	STANDARD INLET PROTECTION
SCE	STABILIZED CONSTRUCTION ENTRANCE
TSS	TOPSOIL STOCKPILE
SF	SILT FENCE
SSF	SUPER SILT FENCE
CWS	CONCRETE WASHOUT STRUCTURE
ST-I	PIPE OUTLET SEDIMENT TRAP ST I
ST-II	STONE/RIPRAP OUTLET SEDIMENT TRAP ST II
GP	GABION INFLOW PROTECTION
BB	BAFFLE BOARDS
OCF	ORANGE CONSTRUCTION FENCE

HRG

HERBERT, ROWLAND & GRUBIC, INC.
5 NORTH MAIN STREET
SUITE 3
CHAMBERSBURG, PA 17201
717. 263.2070 | hrg-inc.com

SITE PLAN FOR MERITUS SCHOOL OF OSTEOPATHIC MEDICINE GRADUATE STUDENT HOUSING

1500 MT. AETNA ROAD
HAGERSTOWN, MD 21742

TAX MAP-50 GRID: 14 PARCEL: 1207
HAGERSTOWN WASHINGTON COUNTY MARYLAND

PROFESSIONAL CERTIFICATION:

STATE OF MARYLAND
SCOTT BERG
59144
PROFESSIONAL ENGINEER

I HEREBY CERTIFY THAT THESE DOCUMENTS WERE PREPARED, OR APPROVED BY ME, AND THAT I AM DULY LICENSED PROFESSIONAL ENGINEER UNDER THE LAWS OF THE STATE OF MARYLAND. LICENSE NO. 59144, EXP. DATE: 2024-03-28

HRG PROJECT NUMBER:	R003887.0427
PLAN DATE:	2023.09.01
DRAWING SCALE:	AS SHOWN
PROJ. MANAGER:	SBB

REVISIONS

NO.	DATE	DESCRIPTION
1	2024.01.16	PER VARIOUS REVIEW AGENCY COMMENTS
2		
3		
4		
5		
6		
7		
8		
9		

SHEET TITLE:

STAGE 3 DETAIL EROSION & SEDIMENT POLLUTION CONTROL PLAN

SHEET: ES-STG3-DT-1

SP-23-034

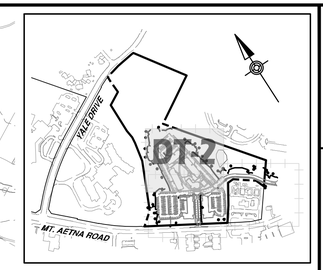

DETAIL SHEET KEY

SCALE: 1" = 700'

GRAPHIC SCALE

30' 15' 0' 30'

SCALE: 1"= 30'

LEGEND

	EXISTING TREELINE
	EXISTING STREAM BED
T	PROPOSED ABOVE GROUND TELEPHONE LINE
	PROPOSED CABLE TV PEDESTAL
E	PROPOSED ABOVE GROUND ELECTRIC LINE
EU	PROPOSED UNDERGROUND ELECTRIC LINE
	PROPOSED UTILITY POLE
E	PROPOSED ELECTRICAL BOX
G	PROPOSED GAS LINE
GV	PROPOSED GAS VALVE
S	PROPOSED SANITARY LINE
	PROPOSED SANITARY/STORM MANHOLE
CO	PROPOSED SANITARY CLEANOUT
W	PROPOSED WATER LINE
WV	PROPOSED WATER VALVE
FH	PROPOSED FIRE HYDRANT
	PROPOSED TREE LINE
	PROPOSED PROPERTY LINE
	PROPOSED/REQUIRED RIGHT-OF-WAY LINE
1010	PROPOSED CONTOUR
x 410.00	PROPOSED SPOT ELEVATION
	PROPOSED STORM SEWER & INLET
ROP1	PROPOSED ROCK OUTLET PROTECTION
NPDES LOD	NPDES/LIMIT OF DISTURBANCE BOUNDARY LINE
SP	STANDARD INLET PROTECTION
SCE	STABILIZED CONSTRUCTION ENTRANCE
TSS	TOPSOIL STOCKPILE
SF	SILT FENCE
SSF	SUPER SILT FENCE
CWS	CONCRETE WASHOUT STRUCTURE
ST-I	PIPE OUTLET SEDIMENT TRAP ST I
ST-II	STONE/RIPRAP OUTLET SEDIMENT TRAP ST II
GP	GABION INFLOW PROTECTION
BB	BAFFLE BOARDS
OCF	ORANGE CONSTRUCTION FENCE

HRG

HERBERT, ROWLAND & GRUBIC, INC.
5 NORTH MAIN STREET
SUITE 3
CHAMBERSBURG, PA 17201
717. 263.2070 | hrg-inc.com

SITE PLAN
FOR
MERITUS SCHOOL OF OSTEOPATHIC MEDICINE GRADUATE STUDENT HOUSING

1500 MT. AETNA ROAD
HAGERSTOWN, MD 21742

TAX MAP-50 GRID: 14 PARCEL: 1207
HAGERSTOWN WASHINGTON COUNTY MARYLAND

PROFESSIONAL CERTIFICATION:

STATE OF MARYLAND — SCOTT BERG — 59144 — PROFESSIONAL ENGINEER

I HEREBY CERTIFY THAT THESE DOCUMENTS WERE PREPARED OR APPROVED BY ME, AND THAT I AM DULY LICENSED PROFESSIONAL ENGINEER UNDER THE LAWS OF THE STATE OF MARYLAND. LICENSE NO. 59144, EXP. DATE: 2024-07-30

HRG PROJECT NUMBER:	R003887.0427
PLAN DATE:	2023.09.01
DRAWING SCALE:	AS SHOWN
PROJ. MANAGER:	SBB

REVISIONS

NO.	DATE	DESCRIPTION
1	2024.01.16	PER VARIOUS REVIEW AGENCY COMMENTS
2		
3		
4		
5		
6		
7		
8		
9		

SHEET TITLE:

STAGE 3 DETAIL EROSION & SEDIMENT POLLUTION CONTROL PLAN

SP-23-034

SHEET: ES-STG3-DT-2

SP-23-034

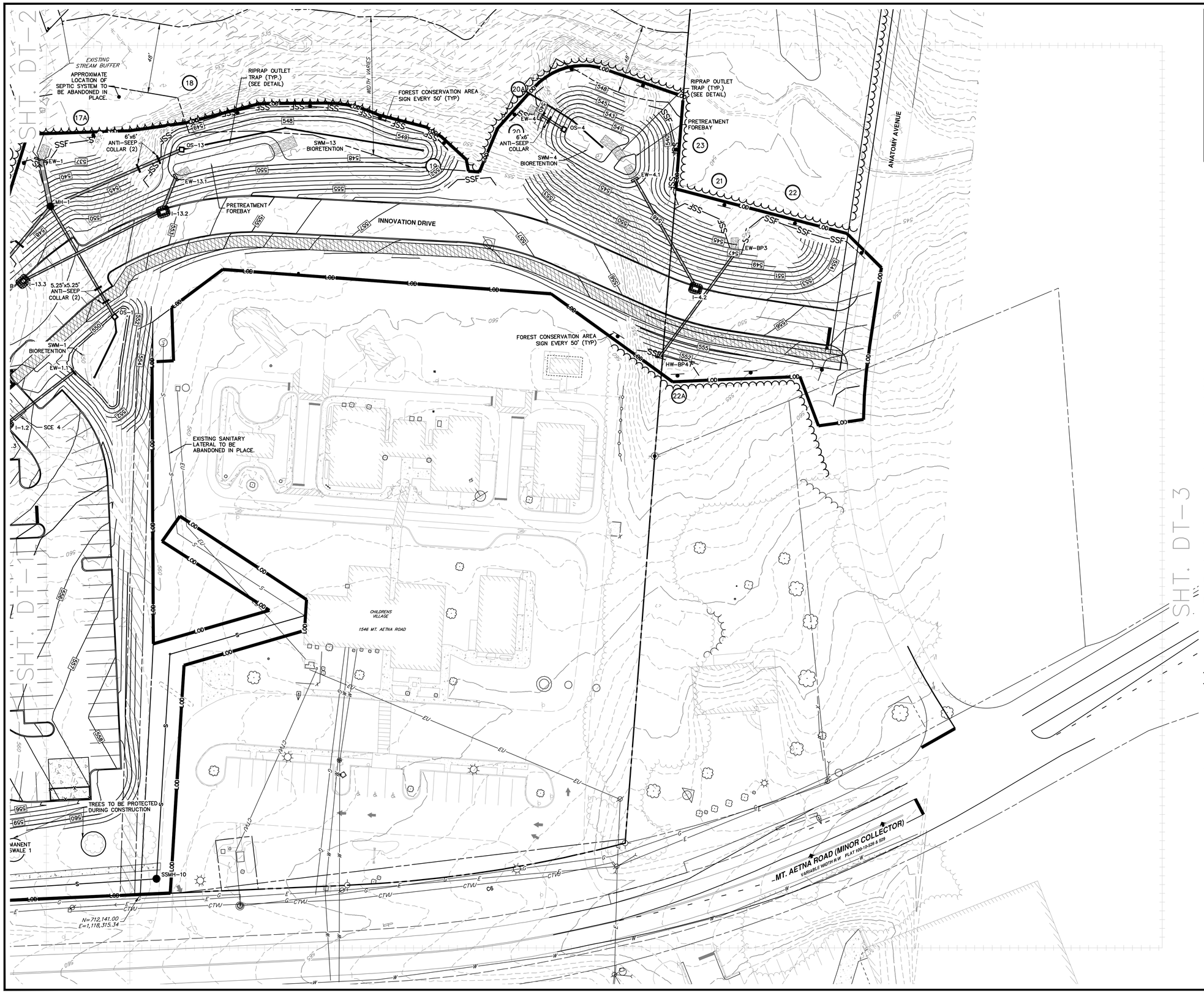

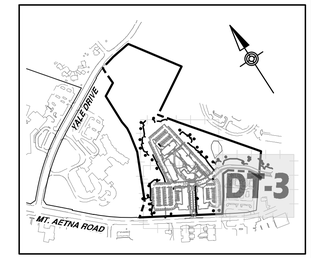

DETAIL SHEET KEY

SCALE: 1" = 700'

GRAPHIC SCALE

30' 15' 0' 30'

SCALE: 1"= 30'

LEGEND

	EXISTING TREELINE
	EXISTING STREAM BED
T	PROPOSED ABOVE GROUND TELEPHONE LINE
	PROPOSED CABLE TV PEDESTAL
E	PROPOSED ABOVE GROUND ELECTRIC LINE
EU	PROPOSED UNDERGROUND ELECTRIC LINE
	PROPOSED UTILITY POLE
E	PROPOSED ELECTRICAL BOX
G	PROPOSED GAS LINE
GV	PROPOSED GAS VALVE
S	PROPOSED SANITARY LINE
	PROPOSED SANITARY/STORM MANHOLE
CO	PROPOSED SANITARY CLEANOUT
W	PROPOSED WATER LINE
WV	PROPOSED WATER VALVE
FH	PROPOSED FIRE HYDRANT
	PROPOSED TREE LINE
	PROPOSED PROPERTY LINE
	PROPOSED/REQUIRED RIGHT-OF-WAY LINE
1010	PROPOSED CONTOUR
x 410.00	PROPOSED SPOT ELEVATION
	PROPOSED STORM SEWER & INLET
ROP1	PROPOSED ROCK OUTLET PROTECTION
NPDES / LOD	NPDES/LIMIT OF DISTURBANCE BOUNDARY LINE
SP	STANDARD INLET PROTECTION
SCE	STABILIZED CONSTRUCTION ENTRANCE
TSS	TOPSOIL STOCKPILE
SF	SILT FENCE
SSF	SUPER SILT FENCE
CWS	CONCRETE WASHOUT STRUCTURE
ST-I	PIPE OUTLET SEDIMENT TRAP ST I
ST-II	STONE/RIPRAP OUTLET SEDIMENT TRAP ST II
GP	GABION INFLOW PROTECTION
BB	BAFFLE BOARDS
OCF	ORANGE CONSTRUCTION FENCE

HRG

HERBERT, ROWLAND & GRUBIC, INC.
5 NORTH MAIN STREET
SUITE 3
CHAMBERSBURG, PA 17201
717. 263.2070 | hrg-inc.com

SITE PLAN FOR MERITUS SCHOOL OF OSTEOPATHIC MEDICINE GRADUATE STUDENT HOUSING

1500 MT. AETNA ROAD
HAGERSTOWN, MD 21742

TAX MAP-50 GRID: 14 PARCEL: 1207
HAGERSTOWN WASHINGTON COUNTY MARYLAND

PROFESSIONAL CERTIFICATION:

STATE OF MARYLAND — SCOTT BERG — 59144 — PROFESSIONAL ENGINEER

I HEREBY CERTIFY THAT THESE DOCUMENTS WERE PREPARED OR APPROVED BY ME, AND THAT I AM A DULY LICENSED PROFESSIONAL ENGINEER UNDER THE LAWS OF THE STATE OF MARYLAND. LICENSE NO. 59144, EXP. DATE: 2024-03-30

HRG PROJECT NUMBER:	R003887.0427
PLAN DATE:	2023.09.01
DRAWING SCALE:	AS SHOWN
PROJ. MANAGER:	SBB

REVISIONS

NO.	DATE	DESCRIPTION
1	2024.01.16	PER VARIOUS REVIEW AGENCY COMMENTS
2		
3		
4		
5		
6		
7		
8		
9		

SHEET TITLE:

STAGE 3 DETAIL EROSION & SEDIMENT POLLUTION CONTROL PLAN

SHEET: ES-STG3-DT-3

SP-23-034

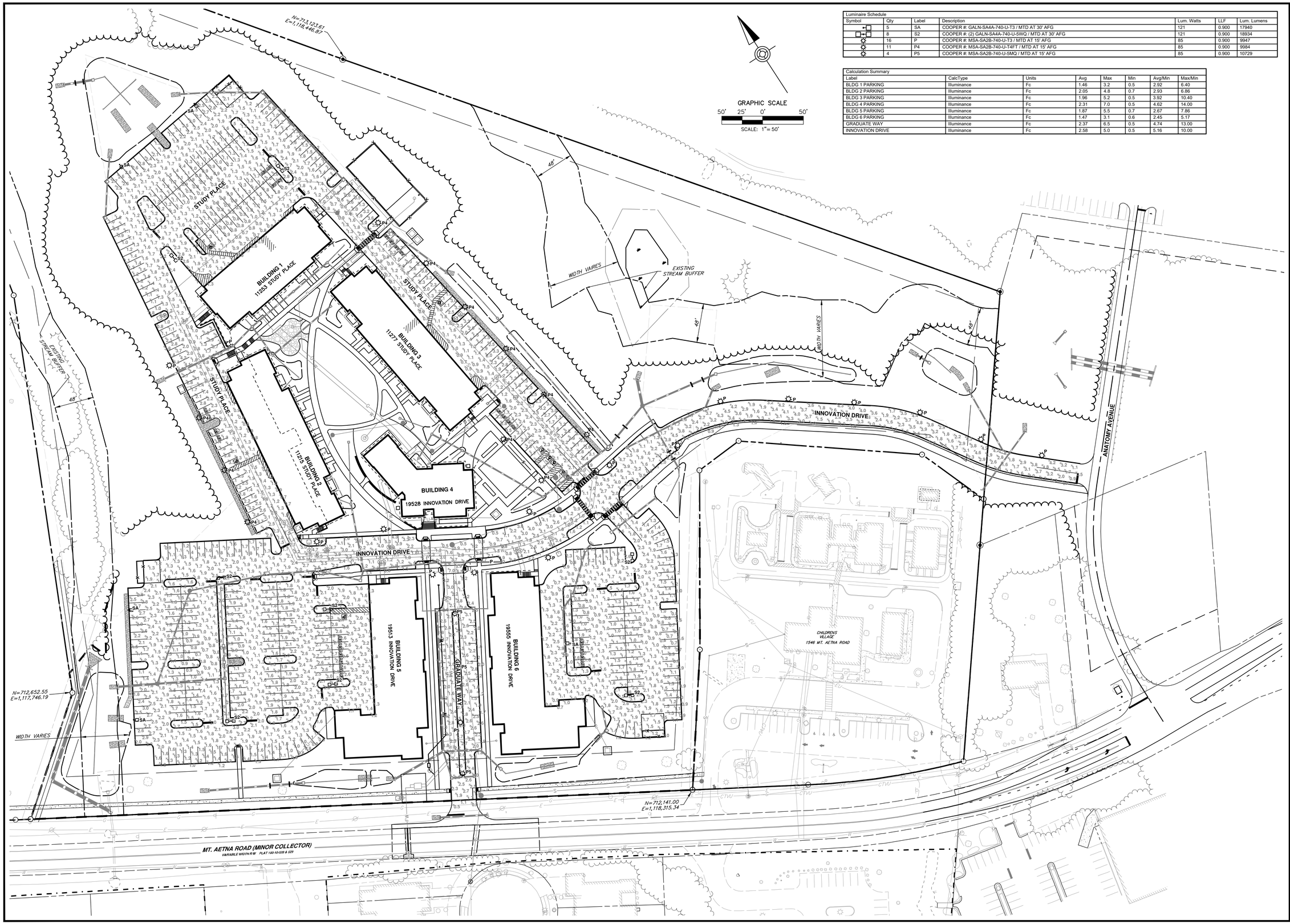

Luminaire Schedule							
Symbol	Qty	Label	Description	Lum. Watts	LLF	Lum. Lumens
	5	SA	COOPER #: GALN-SA4A-740-U-T3 / MTD AT 30' AFG	121	0.900	17940
	8	S2	COOPER #: (2) GALN-SA4A-740-U-5WQ / MTD AT 30' AFG	121	0.900	18934
	16	P	COOPER #: MSA-SA2B-740-U-T3 / MTD AT 15' AFG	85	0.900	9947
	11	P4	COOPER #: MSA-SA2B-740-U-T4FT / MTD AT 15' AFG	85	0.900	9984
	4	P5	COOPER #: MSA-SA2B-740-U-5MQ / MTD AT 15' AFG	85	0.900	10729

Calculation Summary							
Label	CalcType	Units	Avg	Max	Min	Avg/Min	Max/Min
BLDG 1 PARKING	Illuminance	Fc	1.46	3.2	0.5	2.92	6.40
BLDG 2 PARKING	Illuminance	Fc	2.05	4.8	0.7	2.93	6.86
BLDG 3 PARKING	Illuminance	Fc	1.96	5.2	0.5	3.92	10.40
BLDG 4 PARKING	Illuminance	Fc	2.31	7.0	0.5	4.62	14.00
BLDG 5 PARKING	Illuminance	Fc	1.87	5.5	0.7	2.67	7.86
BLDG 6 PARKING	Illuminance	Fc	1.47	3.1	0.6	2.45	5.17
GRADUATE WAY	Illuminance	Fc	2.37	6.5	0.5	4.74	13.00
INNOVATION DRIVE	Illuminance	Fc	2.58	5.0	0.5	5.16	10.00

HRG
HERBERT, ROWLAND & GRUBIC, INC.
5 NORTH MAIN STREET
SUITE 3
CHAMBERSBURG, PA 17201
717. 263.2070 | hrg-inc.com

SITE PLAN
FOR
MERITUS SCHOOL OF OSTEOPATHIC MEDICINE GRADUATE STUDENT HOUSING
1500 MT. AETNA ROAD
HAGERSTOWN, MD 21742
TAX MAP-50 GRID: 14 PARCEL: 1207
HAGERSTOWN WASHINGTON COUNTY MARYLAND

PROFESSIONAL CERTIFICATION:

STATE OF MARYLAND
SCOTT BERG
59144
PROFESSIONAL ENGINEER

I HEREBY CERTIFY THAT THESE DOCUMENTS WERE PREPARED OR APPROVED BY ME, AND THAT I AM DULY LICENSED PROFESSIONAL ENGINEER UNDER THE LAWS OF THE STATE OF MARYLAND. LICENSE NO. 59144, EXP. DATE: 2024-03-28

HRG PROJECT NUMBER:	R003887.0427
PLAN DATE:	2023.09.01
DRAWING SCALE:	AS SHOWN
PROJ. MANAGER:	SBB

REVISIONS

NO.	DATE	DESCRIPTION
1	2024.01.16	PER VARIOUS REVIEW AGENCY COMMENTS
2		
3		
4		
5		
6		
7		
8		
9		

SHEET TITLE:
OVERALL LIGHTING PLAN

SP-23-034

SHEET: LI-OA

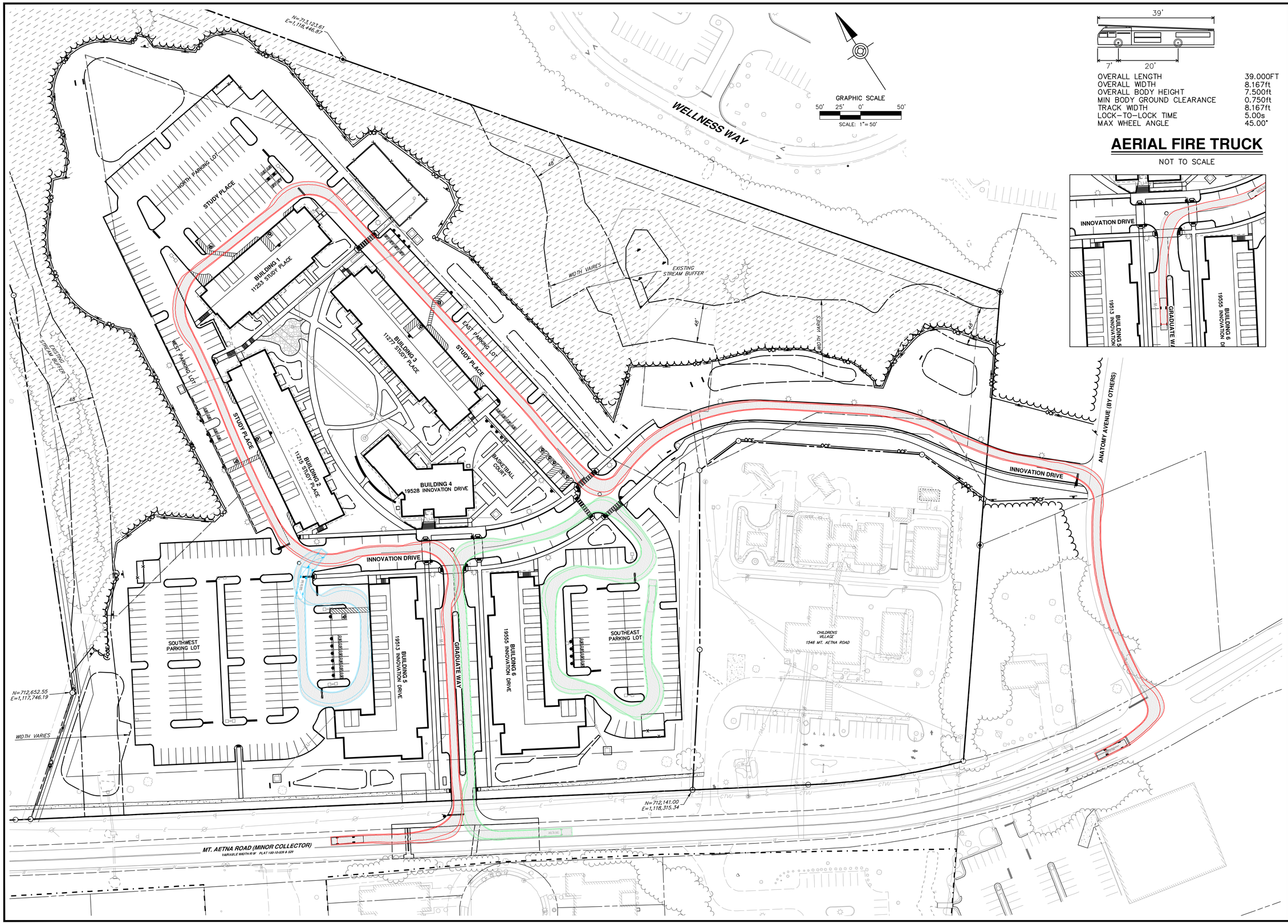

OVERALL LENGTH	39.000FT
OVERALL WIDTH	8.167ft
OVERALL BODY HEIGHT	7.500ft
MIN BODY GROUND CLEARANCE	0.750ft
TRACK WIDTH	8.167ft
LOCK-TO-LOCK TIME	5.00s
MAX WHEEL ANGLE	45.00°

AERIAL FIRE TRUCK

NOT TO SCALE

HRG
HERBERT, ROWLAND & GRUBIC, INC.
5 NORTH MAIN STREET
SUITE 3
CHAMBERSBURG, PA 17201
717. 263.2070 | hrg-inc.com

SITE PLAN
FOR
MERITUS SCHOOL OF OSTEOPATHIC MEDICINE GRADUATE STUDENT HOUSING

1500 MT. AETNA ROAD
HAGERSTOWN, MD 21742
TAX MAP-50 GRID: 14 PARCEL: 1207
HAGERSTOWN WASHINGTON COUNTY MARYLAND

PROFESSIONAL CERTIFICATION:

STATE OF MARYLAND
SCOTT BERG
5914A
PROFESSIONAL ENGINEER

I HEREBY CERTIFY THAT THESE DOCUMENTS WERE PREPARED OR APPROVED BY ME, AND THAT I AM A DULY LICENSED PROFESSIONAL ENGINEER UNDER THE LAWS OF THE STATE OF MARYLAND. LICENSE NO. 5914A, EXP. DATE: 2024-03-26

HRG PROJECT NUMBER:	R003887.0427
PLAN DATE:	2023.09.01
DRAWING SCALE:	AS SHOWN
PROJ. MANAGER:	SBB

REVISIONS

NO.	DATE	DESCRIPTION
1	2024.01.16	PER VARIOUS REVIEW AGENCY COMMENTS
2		
3		
4		
5		
6		
7		
8		
9		

SHEET TITLE:
VEHICLE TRACKING PLAN - AERIAL FIRE TRUCK

SP-23-034

SHEET: VT

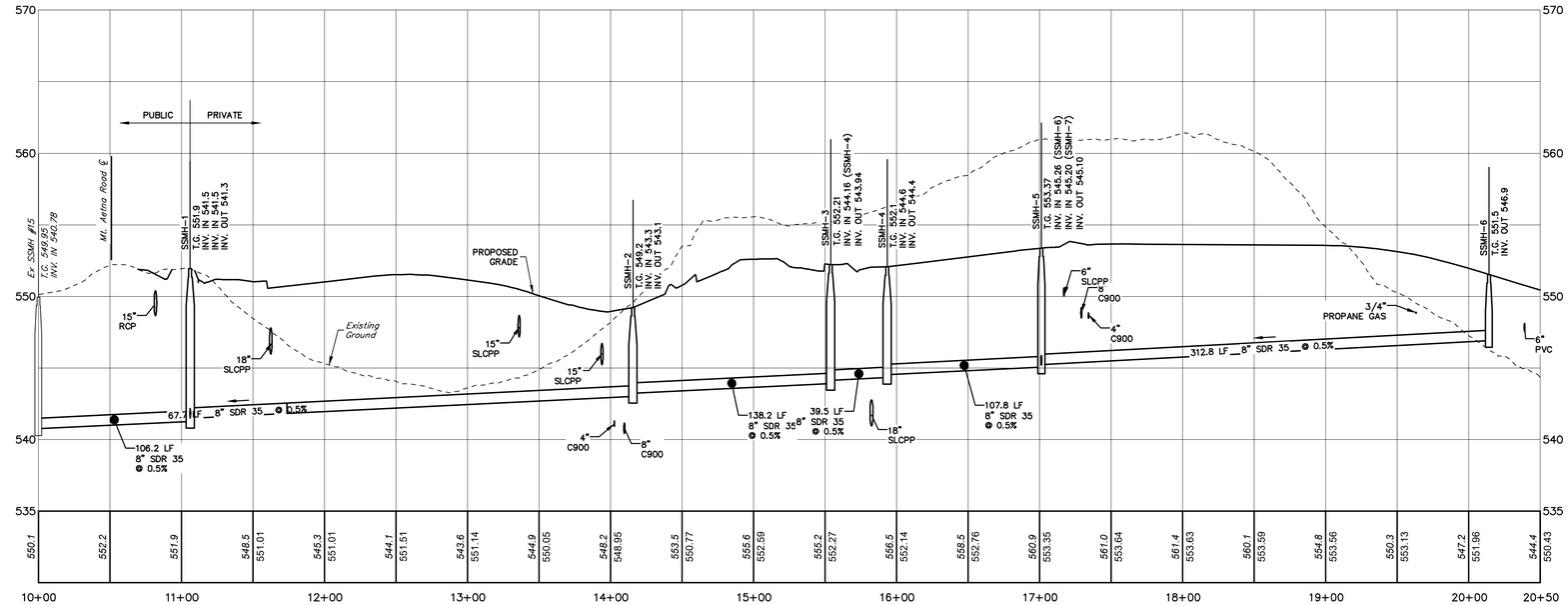

SANITARY SEWER MAIN PROFILE - EX SSMH-15 TO SSMH-6

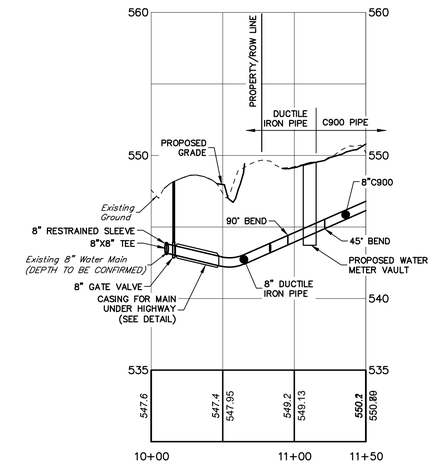

WATER MAIN PROFILE
MT. AETNA TO WATER METER PIT

NOTES:
1. ALL WATER LINES CONSTRUCTED WITHIN THE MT. AETNA ROAD RIGHT-OF-WAY AND UP TO THE PROPOSED WATER METER VAULT SHALL BE DUCTILE IRON PIPE. ALL OTHER WATER LINES LOCATED ON SITE SHALL BE C900.

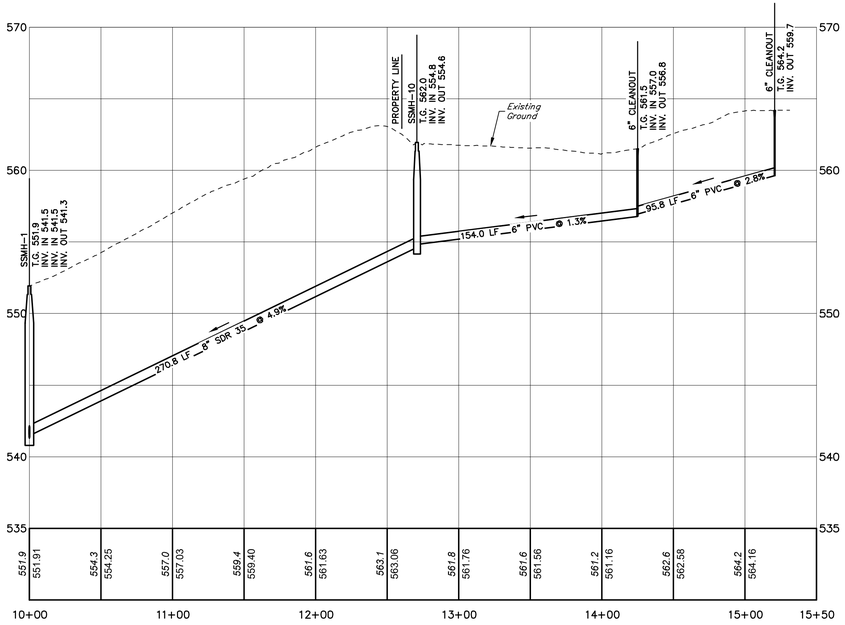

SANITARY SEWER MAIN PROFILE - SSMH-1 TO SSMH-10
SANITARY SEWER PRIVATE LATERAL - SSMH-10 TO CHILDREN'S VILLAGE

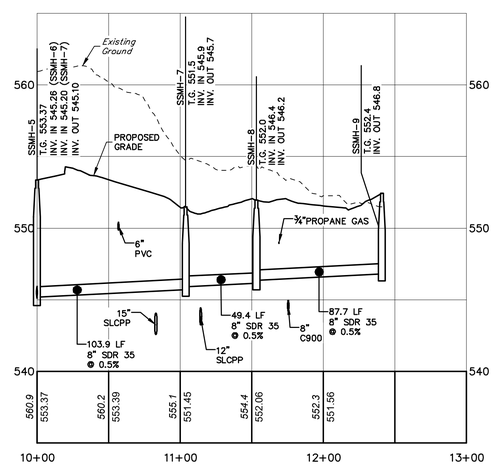

SANITARY SEWER MAIN PROFILE - SSMH-5 TO SSMH-9

NOTE:

A CONSTRUCTION PERMIT SHALL BE OBTAINED FROM THE CITY OF HAGERSTOWN UTILITIES DEPARTMENT PRIOR TO BEGINNING CONSTRUCTION OF THE WATERLINE AND/OR SEWERLINE. CONTACT THE UTILITIES ENGINEERING DEPARTMENT AT 301-739-8577, EXT 653 FOR THE PERMIT APPLICATION.

CITY OF HAGERSTOWN UTILITIES DEPARTMENT - WATER AND WASTEWATER DIVISIONS

THIS APPROVAL IS FOR THE DESIGN AND LAYOUT OF THE PROPOSED WATER AND WASTEWATER SYSTEM IMPROVEMENTS. ALL WATER AND WASTEWATER SYSTEM IMPROVEMENTS SHALL BE CONSTRUCTED TO THE STANDARDS IN EFFECT AT THE TIME OF CONSTRUCTION. THIS APPROVAL DOES NOT GUARANTEE AVAILABILITY OF WATER OR WASTEWATER SERVICE. WATER AND WASTEWATER SERVICE IS AVAILABLE SUBJECT TO CONFORMANCE WITH ALL POLICIES AND STANDARDS IN EFFECT AT THE TIME OF APPLICATION FOR SERVICE. PAYMENT OF FEES AND APPROVAL OF THE WATER AND/OR WASTEWATER SERVICE APPLICATION. THE WATER DIVISION DOES NOT GUARANTEE A SPECIFIC WATER PRESSURE OR FLOW AT ANY METER OR FIRE HYDRANT. THIS APPROVAL IS VALID FOR A PERIOD OF ONE YEAR.

(SIGNATURE) (DATE)

HORIZ: 50' 25' 0' 50'
VERT: 5' 2.5' 0' 5'
SCALE IN FEET

HRG
HERBERT, ROWLAND & GRUBIC, INC.
5 NORTH MAIN STREET
SUITE 3
CHAMBERSBURG, PA 17201
717. 263.2070 | hrg-inc.com

SITE PLAN
FOR
MERITUS SCHOOL OF OSTEOPATHIC MEDICINE GRADUATE STUDENT HOUSING
1500 MT. AETNA ROAD
HAGERSTOWN, MD 21742
TAX MAP-50 GRID: 14 / PARCEL: 1207
HAGERSTOWN WASHINGTON COUNTY MARYLAND

PROFESSIONAL CERTIFICATION:

STATE OF MARYLAND
SCOTT BERG
59144
PROFESSIONAL ENGINEER

I HEREBY CERTIFY THAT THESE DOCUMENTS WERE PREPARED OR APPROVED BY ME, AND THAT I AM DULY LICENSED PROFESSIONAL ENGINEER UNDER THE LAWS OF THE STATE OF MARYLAND. LICENSE NO. 59144, EXP. DATE: 2024-03-28

HRG PROJECT NUMBER:	R003887.0427
PLAN DATE:	2023.09.01
DRAWING SCALE:	AS SHOWN
PROJ. MANAGER:	SBB

REVISIONS

NO.	DATE	DESCRIPTION
1	2024.01.16	PER VARIOUS REVIEW AGENCY COMMENTS
2		
3		
4		
5		
6		
7		
8		
9		

SHEET TITLE:
SANITARY SEWER PROFILES

SP-23-034

SHEET: SAN-PR

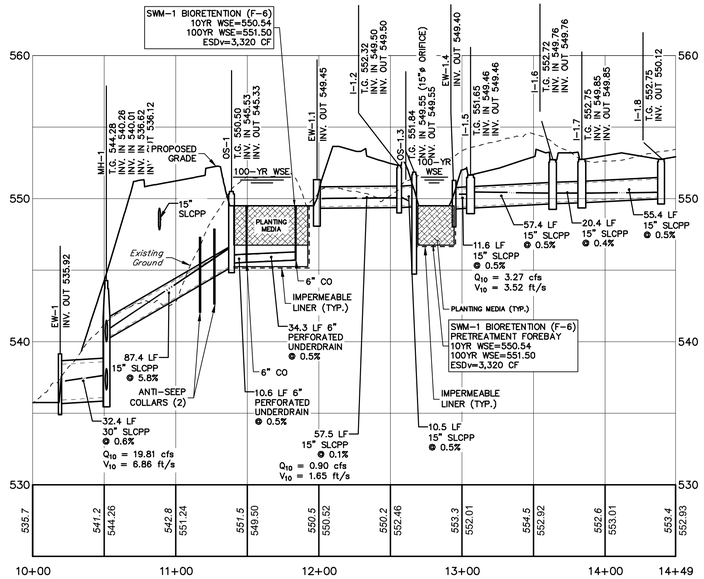

EW-1 TO I-1.8

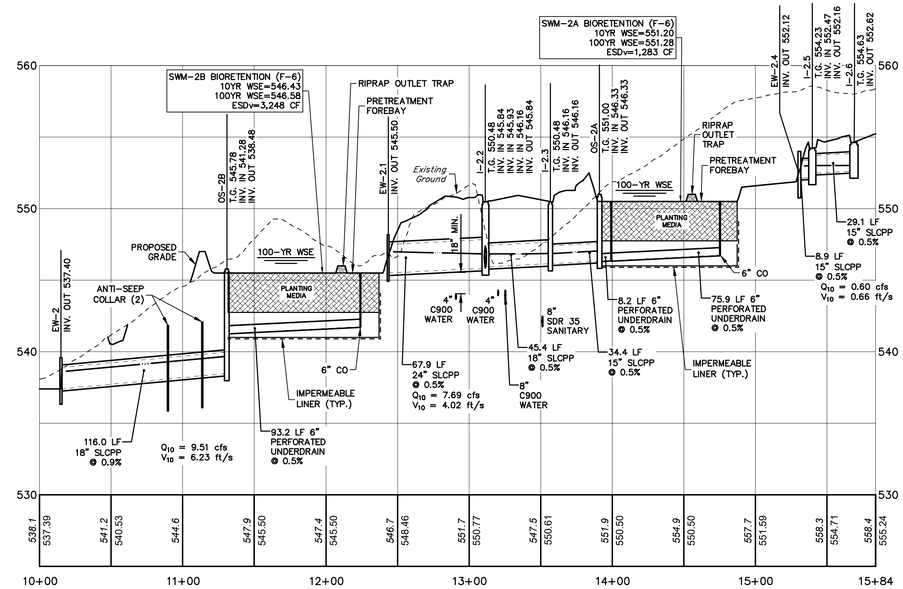

EW-2 TO I-2.6

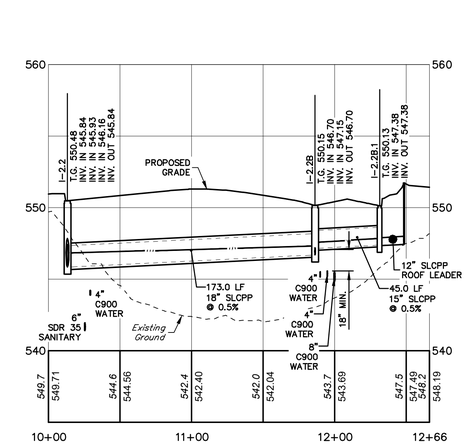

I-2.2 TO I-2.2B.1

HORIZ: 50' 25' 0' 50'
VERT: 5' 2.5' 0' 5'
SCALE IN FEET

10-YR HYDRAULIC GRADE LINE (HGL)

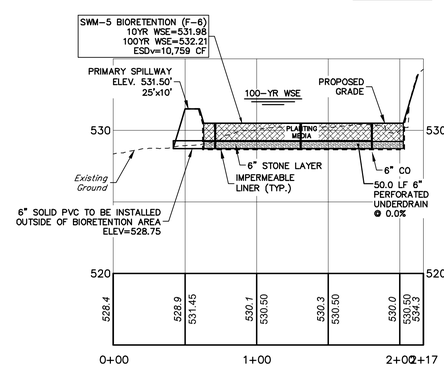

BIORETENTION POND 5

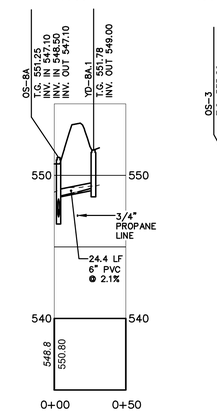

OS-8A TO YD-8A.1

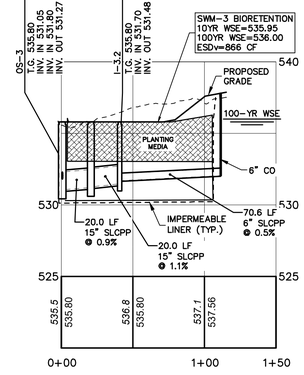

OS-3 TO I-3.2

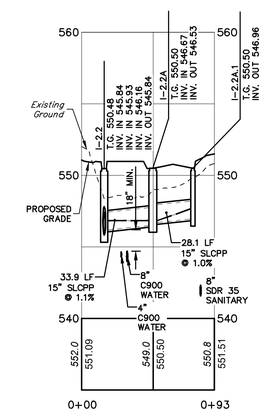

I-2.2 TO I-2.2A.1

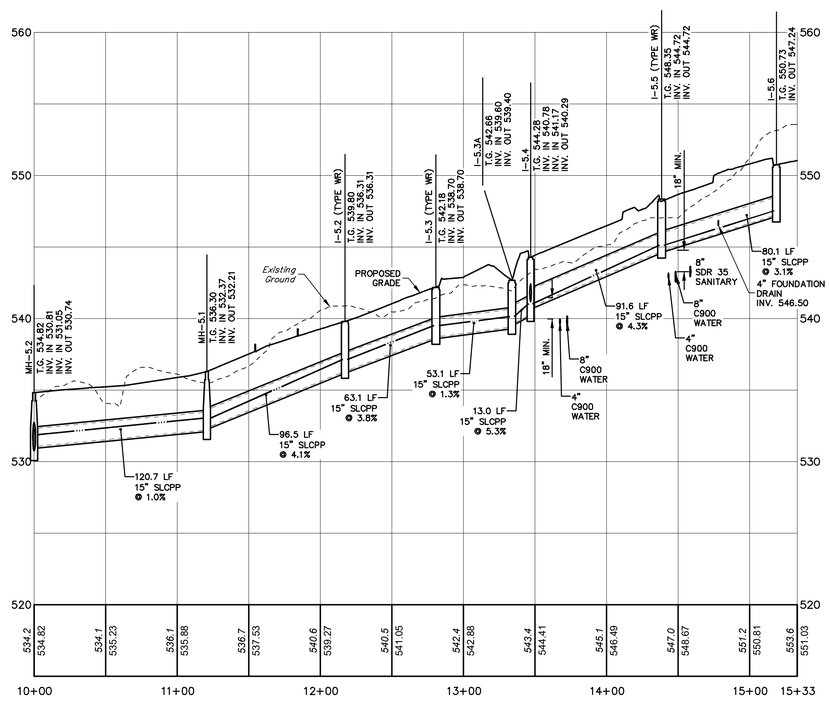

MH-5.2 TO I-5.6

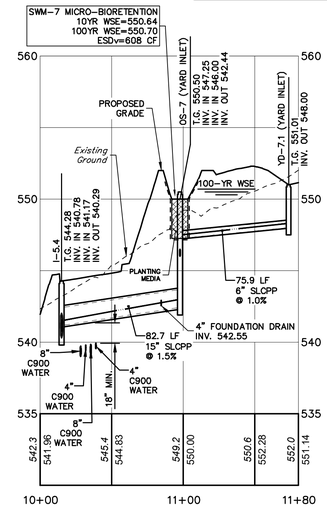

I-5.4 TO YD-7.1

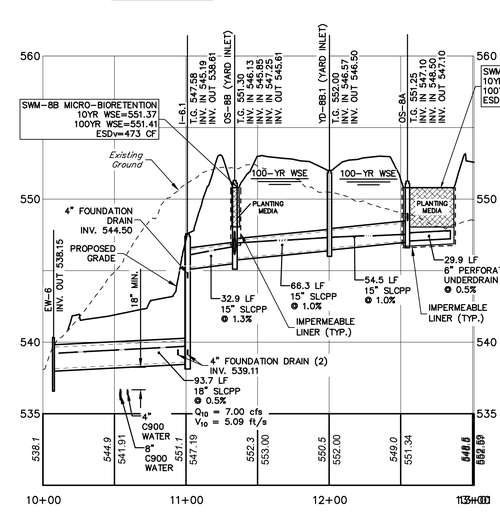

EW-6 TO OS-8A

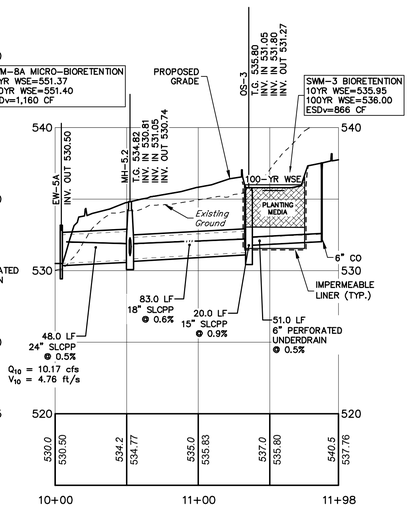

EW-5ATO I-3.1

HRG
HERBERT, ROWLAND & GRUBIC, INC.
5 NORTH MAIN STREET
SUITE 3
CHAMBERSBURG, PA 17201
717. 263.2070 | hrg-inc.com

SITE PLAN FOR MERITUS SCHOOL OF OSTEOPATHIC MEDICINE GRADUATE STUDENT HOUSING

1500 MT. AETNA ROAD
HAGERSTOWN, MD 21742
TAX MAP-50 GRID: 14 PARCEL: 1207
HAGERSTOWN WASHINGTON COUNTY MARYLAND

PROFESSIONAL CERTIFICATION:

STATE OF MARYLAND SCOTT BERG 59144 PROFESSIONAL ENGINEER

I HEREBY CERTIFY THAT THESE DOCUMENTS WERE PREPARED OR APPROVED BY ME, AND THAT I AM DULY LICENSED PROFESSIONAL ENGINEER UNDER THE LAWS OF THE STATE OF MARYLAND. LICENSE NO. 59144, EXP. DATE: 2024-03-28

HRG PROJECT NUMBER:	R003887.0427
PLAN DATE:	2023.09.01
DRAWING SCALE:	AS SHOWN
PROJ. MANAGER:	SBB

REVISIONS

NO.	DATE	DESCRIPTION
1	2024.01.16	PER VARIOUS REVIEW AGENCY COMMENTS
2		
3		
4		
5		
6		
7		
8		
9		

SHEET TITLE:
STORMWATER PIPE PROFILES

SP-23-034

SHEET: STM-PR-1

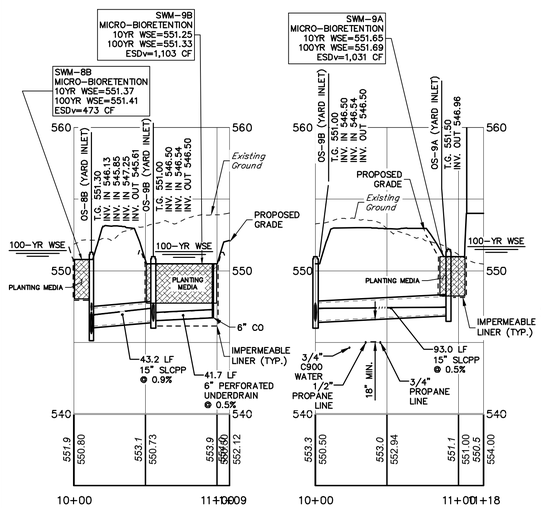

OS-8B TO OS-9B

OS-9B TO OS-9A

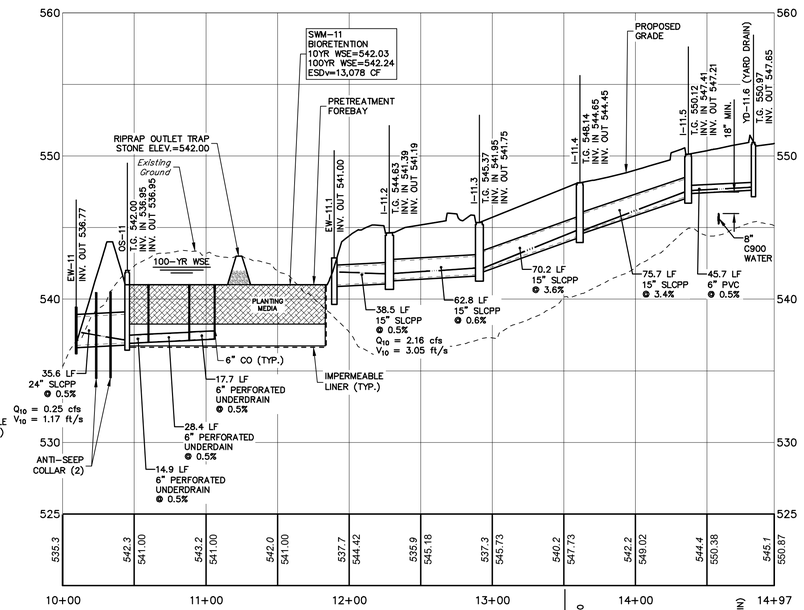

EW-11 TO I-11.6

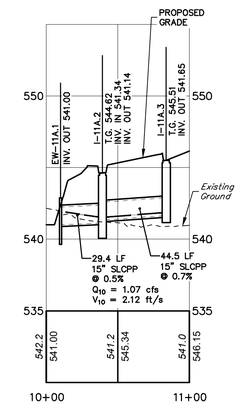

EW-11A.1 TO I-11A.3

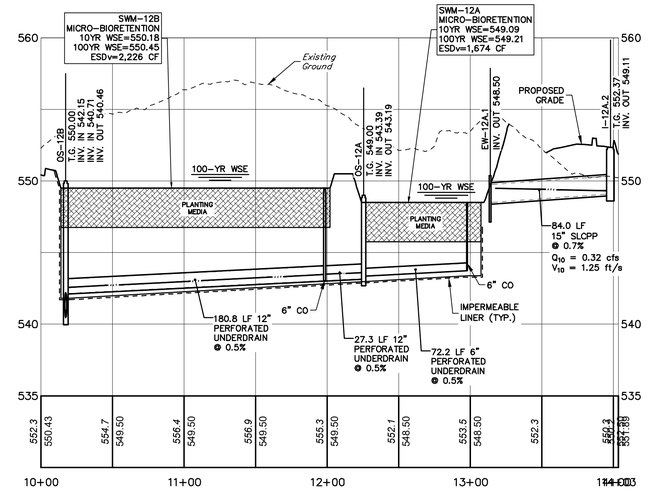

OS-12B TO I-12.A.2

HORIZ: 50' 25' 0' 50'
VERT: 5' 2.5' 0' 5'
SCALE IN FEET

10-YR HYDRAULIC GRADE LINE (HGL)

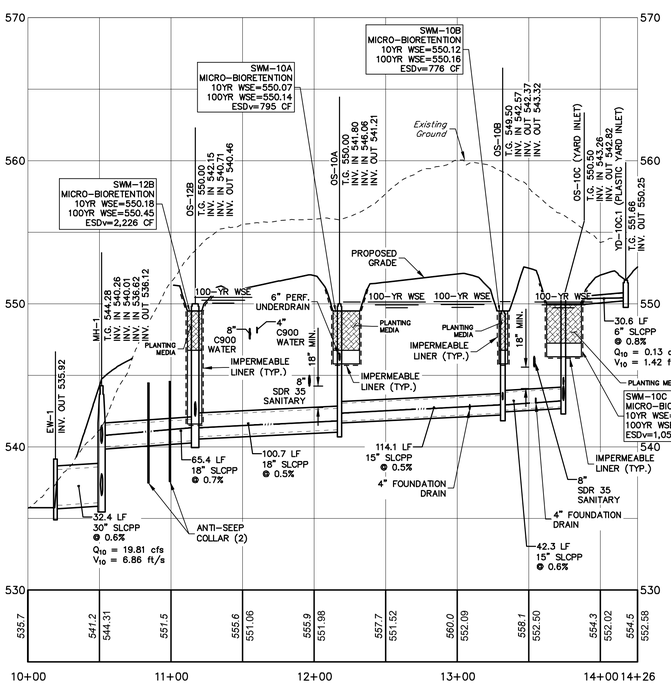

EW-1 TO OS-10C

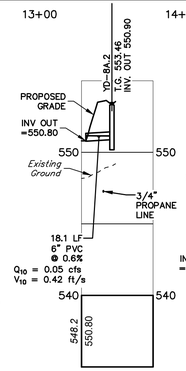

SWM-8A TO YD-8A.2

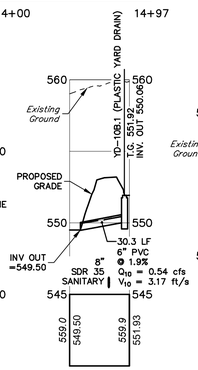

SWM-10B TO YD-10B.1

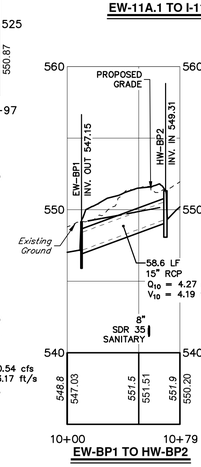

EW-BP1 TO HW-BP2

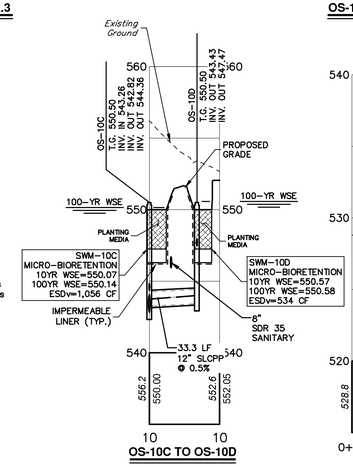

OS-10C TO OS-10D

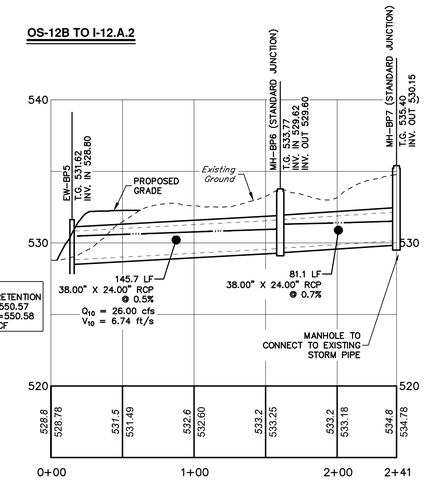

EW-B.3 TO MH-B.1

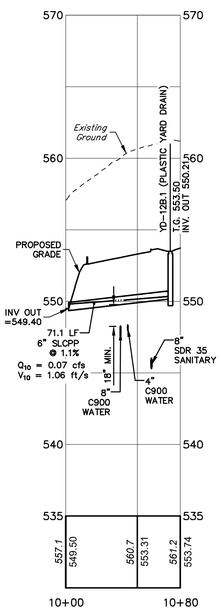

YD-12B.1

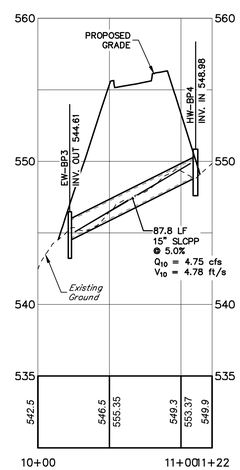

EW-BP3 TO HW-BP4

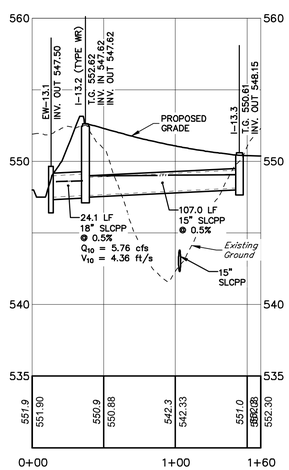

EW-13.1 TO I-13.3

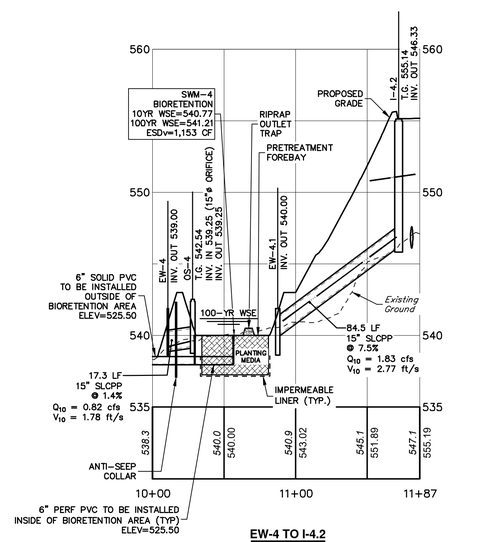

EW-4 TO I-4.2

HRG
HERBERT, ROWLAND & GRUBIC, INC.
5 NORTH MAIN STREET
SUITE 3
CHAMBERSBURG, PA 17201
717. 263.2070 | hrg-inc.com

SITE PLAN FOR MERITUS SCHOOL OF OSTEOPATHIC MEDICINE GRADUATE STUDENT HOUSING

1500 MT. AETNA ROAD
HAGERSTOWN, MD 21742
TAX MAP-50 GRID:14 PARCEL: 1207
HAGERSTOWN WASHINGTON COUNTY MARYLAND

PROFESSIONAL CERTIFICATION:

STATE OF MARYLAND · SCOTT BERG · 59144 · PROFESSIONAL ENGINEER

I HEREBY CERTIFY THAT THESE DOCUMENTS WERE PREPARED OR APPROVED BY ME, AND THAT I AM A DULY LICENSED PROFESSIONAL ENGINEER UNDER THE LAWS OF THE STATE OF MARYLAND. LICENSE NO. 59144, EXP. DATE: 2024-03-28

HRG PROJECT NUMBER: R003887.0427
PLAN DATE: 2023.09.01
DRAWING SCALE: AS SHOWN
PROJ. MANAGER: SBB

REVISIONS

NO.	DATE	DESCRIPTION
1	2024.01.16	PER VARIOUS REVIEW AGENCY COMMENTS
2		
3		
4		
5		
6		
7		
8		
9		

SHEET TITLE:
STORMWATER PIPE PROFILES

SP-23-034

SHEET: STM-PR-2

PIPE TABLE							
UPSTREAM STRUCTURE	UPSTREAM INVERT	DIAMETER	MATERIAL	LENGTH	SLOPE	DOWNSTREAM INVERT	DOWNSTREAM STRUCTURE
STR-195*	528.75	6	PVC	29.29'	0.00%	528.75	
STR-194*	528.75	6	PVC	60.00'	0.00%	528.75	STR-195*
STR-191*	528.75	6	PVC	50.00'	0.00%	528.75	STR-194*
MH-BP6	529.60	38	RCP	145.66'	0.55%	528.80	EW-BP5
MH-BP7	530.15	38	RCP	81.12'	0.65%	529.62	MH-BP6
MH-5.2	530.74	24	SLCPP	48.00'	0.50%	530.50	EW-5A
OS-3	531.05	15	SLCPP	20.00'	0.85%	531.22	I-3.1
OS-3	531.27	18	SLCPP	83.03'	0.56%	530.81	MH-5.2
I-3.2	531.48	15	SLCPP	20.00'	1.06%	531.26	I-3.1
STR-137*	532.05	6	SLCPP	70.63'	0.50%	531.70	I-3.2
STR-136*	532.05	6	SLCPP	51.00'	0.50%	531.80	OS-3
MH-5.1	532.21	15	SLCPP	120.73'	0.96%	531.05	MH-5.2
MH-1	536.12	30	SLCPP	32.37'	0.64%	535.92	EW-1
I-5.2	536.31	15	SLCPP	96.48'	4.09%	532.37	MH-5.1
OS-11	536.95	24	SLCPP	35.62'	0.50%	536.77	EW-11
STR-144*	537.02	6	SLCPP	14.87'	0.50%	536.95	OS-11
STR-146*	537.16	6	SLCPP	28.37'	0.50%	537.02	STR-144*
STR-143*	537.25	6	SLCPP	17.73'	0.50%	537.16	STR-146*
STR-179*	538.00	6	PVC	41.52'	0.00%	538.00	*
STR-178*	538.00	6	PVC	27.17'	0.00%	538.00	STR-179*

* DENOTES STRUCTURES NOT IDENTIFIED BY A STRUCTURE NUMBER IN PLAN VIEW BUT RATHER LABELED AS "C.O."

PIPE TABLE							
UPSTREAM STRUCTURE	UPSTREAM INVERT	DIAMETER	MATERIAL	LENGTH	SLOPE	DOWNSTREAM INVERT	DOWNSTREAM STRUCTURE
STR-145*	538.46	6	SLCPP	27.94'	1.00%	538.18	STR-146*
STR-147*	538.47	6	SLCPP	25.79'	0.22%	538.41	STR-146*
OS-2B	538.48	18	SLCPP	115.96'	0.93%	537.40	EW-2
I-6.1	538.61	18	SLCPP	93.69'	0.50%	538.15	EW-6
I-5.3	538.70	15	SLCPP	63.09'	3.79%	536.31	I-5.2
OS-4	539.25	15	SLCPP	17.29'	1.45%	539.00	EW-4
I-5.3A	539.40	15	SLCPP	53.12'	1.32%	538.70	I-5.3
I-5.4	540.29	15	SLCPP	12.97'	5.32%	539.60	I-5.3A
OS-12B	540.46	18	SLCPP	65.43'	0.69%	540.01	MH-1
I-11A.2	541.14	15	SLCPP	29.36'	0.48%	541.00	EW-11A.1
I-11.2	541.19	15	SLCPP	38.49'	0.49%	541.00	EW-11.1
OS-10A	541.21	18	SLCPP	100.74'	0.50%	540.71	OS-12B
I-11A.3	541.65	15	SLCPP	44.49'	0.69%	541.34	I-11A.2
STR-127*	541.75	6	SLCPP	93.21'	0.50%	541.28	OS-2B
I-11.3	541.75	15	SLCPP	62.81'	0.57%	541.39	I-11.2
OS-13	541.96	18	SLCPP	97.86'	5.45%	536.62	MH-1
OS-10B	542.37	15	SLCPP	114.12'	0.49%	541.80	OS-10A
OS-7	542.44	15	SLCPP	82.68'	1.54%	541.17	I-5.4
OS-10C	542.82	15	SLCPP	42.32'	0.59%	542.57	OS-10B
STR-104*	543.05	12	PVC	180.83'	0.50%	542.15	OS-12B

* DENOTES STRUCTURES NOT IDENTIFIED BY A STRUCTURE NUMBER IN PLAN VIEW BUT RATHER LABELED AS "C.O."

PIPE TABLE							
UPSTREAM STRUCTURE	UPSTREAM INVERT	DIAMETER	MATERIAL	LENGTH	SLOPE	DOWNSTREAM INVERT	DOWNSTREAM STRUCTURE
OS-12A	543.19	12	PVC	27.35'	0.50%	543.05	STR-104*
OS-10B	543.32	6	PVC	16.86'	1.00%	543.15	
OS-10D	543.43	12	SLCPP	33.26'	0.51%	543.26	OS-10C
STR-148*	543.75	6	PVC	72.24'	0.50%	543.39	OS-12A
STR-142*	544.00	6	SLCPP	72.58'	1.00%	543.27	OS-13
OS-10C	544.36	6	PVC	14.94'	1.00%	544.21	
I-11.4	544.45	15	SLCPP	70.25'	3.56%	541.95	I-11.3
I-5.5	544.72	15	SLCPP	91.61'	4.30%	540.78	I-5.4
STR-141*	544.96	6	SLCPP	95.34'	1.01%	544.00	STR-142*
OS-1	545.33	15	SLCPP	87.39'	5.81%	540.26	MH-1
STR-126*	545.58	6	SLCPP	10.59'	0.50%	545.53	OS-1
OS-8B	545.61	15	SLCPP	32.94'	1.26%	545.19	I-6.1
STR-125*	545.75	6	SLCPP	34.28'	0.50%	545.58	STR-126*
I-2.2	545.84	24	SLCPP	67.88'	0.50%	545.50	EW-2.1
I-2.3	546.16	18	SLCPP	45.35'	0.51%	545.93	I-2.2
STR-188*	546.20	6	SLCPP	13.59'	1.47%	546.00	OS-7
STR-120*	546.25	6	SLCPP	38.89'	0.49%	546.06	OS-10A
I-4.2	546.33	15	SLCPP	84.52'	7.48%	540.00	EW-4.1
OS-2A	546.33	15	SLCPP	34.39'	0.51%	546.16	I-2.3
STR-124*	546.37	6	PVC	8.21'	0.50%	546.33	OS-2A

* DENOTES STRUCTURES NOT IDENTIFIED BY A STRUCTURE NUMBER IN PLAN VIEW BUT RATHER LABELED AS "C.O."

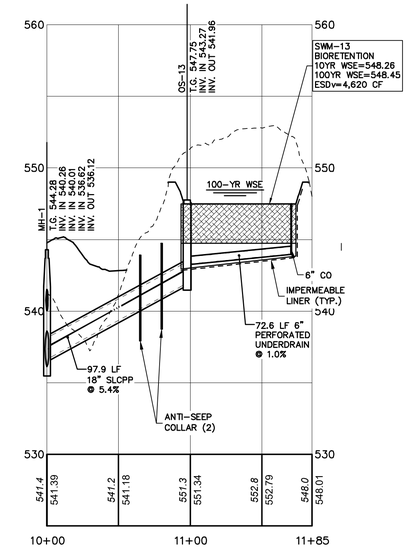

MH-1 TO SWM-13

HORIZ: 50' 25' 0' 50'
VERT: 5' 2.5' 0' 5'
SCALE IN FEET

10-YR HYDRAULIC GRADE LINE (HGL)

PIPE TABLE							
UPSTREAM STRUCTURE	UPSTREAM INVERT	DIAMETER	MATERIAL	LENGTH	SLOPE	DOWNSTREAM INVERT	DOWNSTREAM STRUCTURE
YD-8B.1	546.50	15	SLCPP	66.25'	0.97%	545.85	OS-8B
OS-9B	546.50	15	SLCPP	43.15'	0.86%	546.13	OS-8B
I-2.2A	546.53	15	SLCPP	33.95'	1.09%	546.16	I-2.2
I-2.2B	546.70	18	SLCPP	173.03'	0.49%	545.84	I-2.2
STR-149*	546.75	6	SLCPP	41.65'	0.52%	546.54	OS-9B
STR-123*	546.75	6	SLCPP	75.93'	0.50%	546.37	STR-124*
STR-78*	546.78	6	PVC	17.49'	0.48%	546.70	I-2.2B
OS-9A	546.96	15	SLCPP	93.01'	0.50%	546.50	OS-9B
I-2.2A.1	546.96	15	SLCPP	28.05'	1.02%	546.67	I-2.2A
STR-82*	546.99	6	PVC	42.67'	0.50%	546.78	STR-78*
	547.02	6	PVC	5.51'	0.49%	546.99	STR-82*
OS-8A	547.10	15	SLCPP	54.52'	0.98%	546.57	YD-8B.1
I-11.5	547.21	15	SLCPP	75.71'	3.38%	544.65	I-11.4
I-5.6	547.24	15	SLCPP	80.08'	3.15%	544.72	I-5.5
STR-177*	547.25	6	PVC	11.69'	0.00%	547.25	OS-8B
STR-138*	547.25	6	SLCPP	29.93'	0.51%	547.10	OS-8A
I-2.2B.1	547.38	15	SLCPP	45.03'	0.51%	547.15	I-2.2B
STR-196*	547.42	6	PVC	7.77'	1.00%	547.34	
STR-87*	547.46	6	PVC	17.18'	0.49%	547.38	I-2.2B.1
OS-10D	547.47	6	PVC	4.70'	1.00%	547.43	STR-196*

* DENOTES STRUCTURES NOT IDENTIFIED BY A STRUCTURE NUMBER IN PLAN VIEW BUT RATHER LABELED AS "C.O."

PIPE TABLE							
UPSTREAM STRUCTURE	UPSTREAM INVERT	DIAMETER	MATERIAL	LENGTH	SLOPE	DOWNSTREAM INVERT	DOWNSTREAM STRUCTURE
	547.47	6	PVC	5.10'	1.00%	547.42	STR-196*
I-13.2	547.62	18	SLCPP	24.10'	0.51%	547.50	EW-13.1
YD-11.6	547.65	6	PVC	45.68'	0.53%	547.41	I-11.5
STR-79*	547.68	6	PVC	42.86'	0.50%	547.46	STR-87*
	547.71	6	PVC	6.00'	0.49%	547.68	STR-79*
YD-7.1	548.00	6	SLCPP	75.88'	1.00%	547.25	OS-7
I-13.3	548.15	15	SLCPP	107.01'	0.50%	547.62	I-13.2
HW-BP4	548.98	15	SLCPP	87.77'	4.98%	544.61	EW-BP3
YD-8A.1	549.00	6	PVC	24.36'	2.05%	548.50	OS-8A
I-12A.2	549.11	15	SLCPP	84.03'	0.73%	548.50	EW-12A.1
STR-182*	549.12	6	PVC	24.13'	0.50%	549.00	
STR-181*	549.16	6	PVC	7.45'	0.50%	549.12	STR-182*
HW-BP2	549.31	15	RCP	58.65'	3.69%	547.15	EW-BP1
I-1.5	549.46	15	SLCPP	11.56'	0.49%	549.40	EW-1.4
I-1.2	549.50	15	SLCPP	57.54'	0.09%	549.45	EW-1.1
OS-1.3	549.55	15	SLCPP	10.46'	0.48%	549.50	I-1.2
I-1.6	549.76	15	SLCPP	57.38'	0.53%	549.46	I-1.5
I-1.7	549.85	15	SLCPP	20.39'	0.44%	549.76	I-1.6
STR-169*	550.05	6	PVC	9.71'	0.50%	550.00	
YD-10B.1	550.06	6	PVC	30.31'	1.86%	549.50	

* DENOTES STRUCTURES NOT IDENTIFIED BY A STRUCTURE NUMBER IN PLAN VIEW BUT RATHER LABELED AS "C.O."

PIPE TABLE							
UPSTREAM STRUCTURE	UPSTREAM INVERT	DIAMETER	MATERIAL	LENGTH	SLOPE	DOWNSTREAM INVERT	DOWNSTREAM STRUCTURE
STR-167*	550.06	6	PVC	12.74'	0.50%	550.00	
STR-165*	550.10	6	PVC	9.70'	0.50%	550.05	STR-169*
I-1.8	550.12	15	SLCPP	55.37'	0.50%	549.85	I-1.7
STR-168*	550.13	6	PVC	15.79'	0.50%	550.05	STR-169*
STR-166*	550.14	6	PVC	15.55'	0.50%	550.06	STR-167*
STR-164*	550.18	6	PVC	10.66'	0.50%	550.13	STR-168*
STR-162*	550.19	6	PVC	10.57'	0.50%	550.14	STR-166*
STR-155*	550.21	6	PVC	6.21'	4.96%	549.90	
YD-12B.1	550.21	6	SLCPP	71.15'	1.14%	549.40	
YD-10C.1	550.25	6	SLCPP	30.60'	0.82%	550.00	
STR-157*	550.59	6	PVC	17.84'	0.50%	550.50	
YD-8A.2	550.90	6	PVC	18.09'	0.55%	550.80	
STR-154*	551.03	6	PVC	6.02'	0.50%	551.00	
STR-161*	551.05	6	PVC	9.47'	0.50%	551.00	
STR-151*	551.08	6	PVC	16.35'	0.50%	551.00	
STR-158*	551.10	6	PVC	9.53'	0.50%	551.05	STR-161*
STR-160*	551.14	6	PVC	18.04'	0.50%	551.05	STR-161*
STR-159*	551.19	6	PVC	9.39'	0.50%	551.14	STR-160*
STR-163*	551.47	6	PVC	9.67'	5.00%	550.99	STR-167*
I-2.5	552.16	15	SLCPP	8.90'	0.48%	552.12	EW-2.4

* DENOTES STRUCTURES NOT IDENTIFIED BY A STRUCTURE NUMBER IN PLAN VIEW BUT RATHER LABELED AS "C.O."

PIPE TABLE							
UPSTREAM STRUCTURE	UPSTREAM INVERT	DIAMETER	MATERIAL	LENGTH	SLOPE	DOWNSTREAM INVERT	DOWNSTREAM STRUCTURE
I-2.6	552.62	15	SLCPP	29.15'	0.52%	552.47	I-2.5

HRG
HERBERT, ROWLAND & GRUBIC, INC.
5 NORTH MAIN STREET
SUITE 3
CHAMBERSBURG, PA 17201
717. 263.2070 | hrg-inc.com

SITE PLAN
FOR
MERITUS SCHOOL OF OSTEOPATHIC MEDICINE
GRADUATE STUDENT HOUSING
1500 MT. AETNA ROAD
HAGERSTOWN, MD 21742
TAX MAP-50 GRID: 14 PARCEL: 1207
HAGERSTOWN WASHINGTON COUNTY MARYLAND

PROFESSIONAL CERTIFICATION:

STATE OF MARYLAND
SCOTT BERG
59144
PROFESSIONAL ENGINEER

I HEREBY CERTIFY THAT THESE DOCUMENTS WERE PREPARED OR APPROVED BY ME, AND THAT I AM DULY LICENSED PROFESSIONAL ENGINEER UNDER THE LAWS OF THE STATE OF MARYLAND. LICENSE NO. 59144, EXP. DATE: 2024-03-28

HRG PROJECT NUMBER:	R003887.0427
PLAN DATE:	2023.09.01
DRAWING SCALE:	AS SHOWN
PROJ. MANAGER:	SBB

REVISIONS

NO.	DATE	DESCRIPTION
1	2024.01.16	PER VARIOUS REVIEW AGENCY COMMENTS
2		
3		
4		
5		
6		
7		
8		
9		

SHEET TITLE:
STORMWATER CHARTS

SP-23-034

SHEET: **STM-CH** 42 OF 81

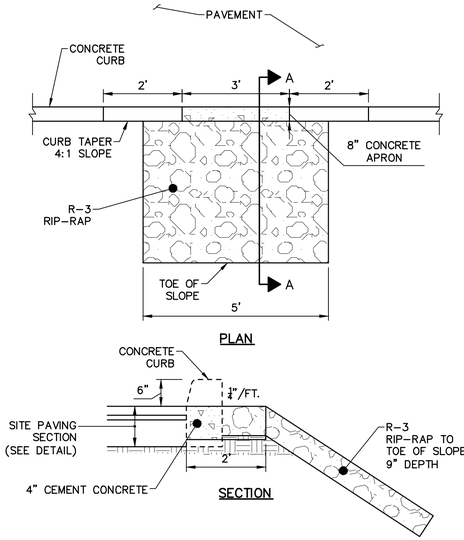

CONCRETE CURB CUT DETAIL - CAR PARKING

NOT TO SCALE

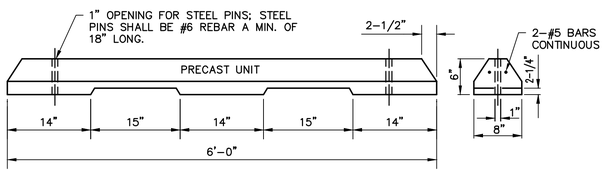

CONCRETE CURB STOP - CAR PARKING

NOT TO SCALE

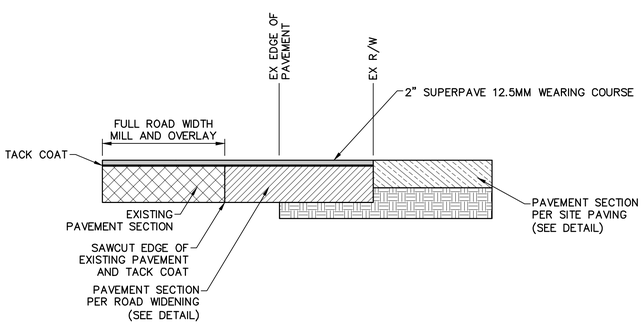

MAIN ENTRANCE PAVEMENT DETAIL

NOT TO SCALE

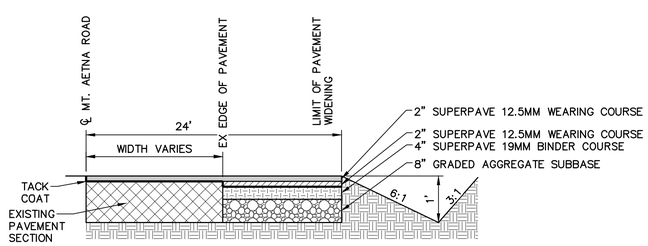

MT. AETNA ROAD WIDENING DETAIL

NOT TO SCALE

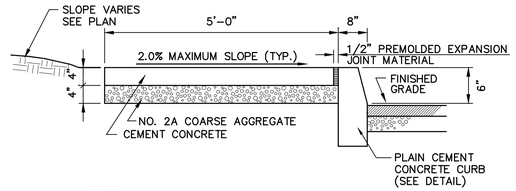

NOTE:
1. SIDEWALK TO HAVE MEDIUM BROOM FINISH PERPENDICULAR TO DIRECTION OF PEDESTRIAN TRAFFIC
2. SEE SITE PLAN FOR SIDEWALK LOCATION.

SIDEWALK DETAIL ADJACENT TO CURB

NOT TO SCALE

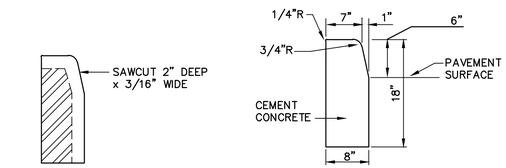

DETAIL 'A' CONTRACTION JOINT

TYPICAL CROSS-SECTION

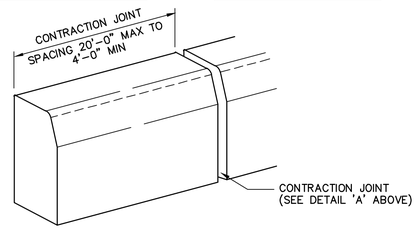

CONCRETE CURB DETAIL

NOT TO SCALE

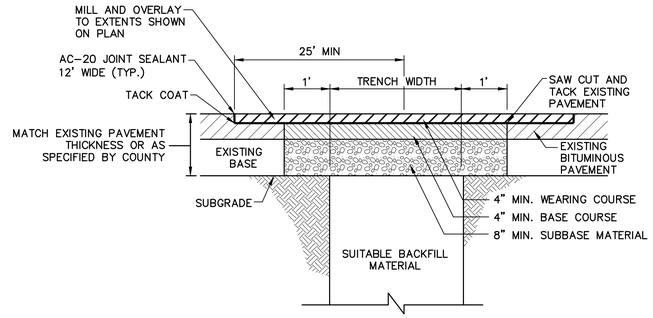

NOTES:
1. RECOMPACT SUBBASE MATERIALS IN CUTBACK AREA
2. TACK COAT ALL VERTICAL EDGES AND INSTALL ONLY BASE COURSE AND BINDER COURSE IN ONE DAY
3. COMPACTION TESTS REQUIRED AT THE DISCRETION OF THE ENGINEER

UTILITY PAVEMENT RESTORATION DETAIL

NOT TO SCALE

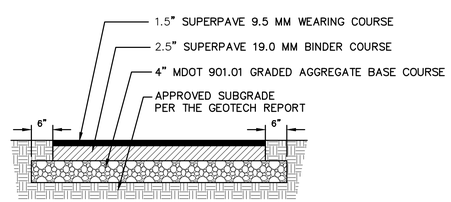

WALKING/BIKE PATH PAVEMENT SECTION DETAIL

NOT TO SCALE

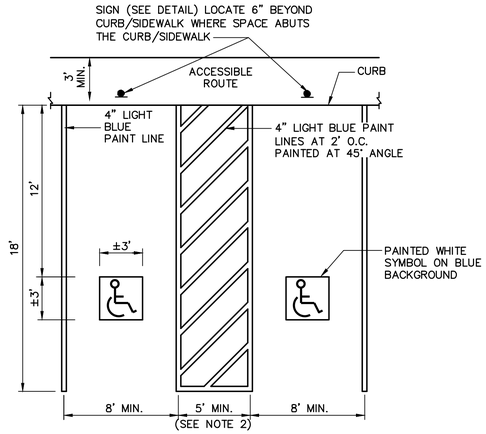

NOTES:
1. SEE SITE PLAN FOR ACCESSIBLE SPACE LOCATIONS AND DIMENSIONS.
2. ACCESS AISLE SHALL BE 8'-0" MIN. WIDTH FOR VAN ACCESSIBLE SPACES.
3. APPLY TWO COATS OF PAINT ON ALL SURFACES.
4. FOR CURB APPLICATIONS, STALL DIMENSIONS SHALL BE MEASURED FROM FACE OF CURB. FOR PAINT APPLICATIONS, STALL DIMENSIONS SHALL BE MEASURED FROM THE CENTERLINE OF THE PAINT LINE.
5. PARKING SPACES AND ACCESS AISLE AREAS SHALL NOT EXCEED 2% SLOPE IN ANY DIRECTION.

ACCESSIBLE PARKING PAVEMENT MARKINGS

NOT TO SCALE

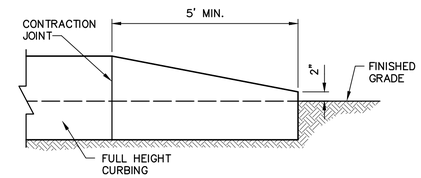

NOTE:
1. APPLY CURB END TRANSITION AT END OF CURB LOCATIONS.

CURB END TRANSITION

NOT TO SCALE

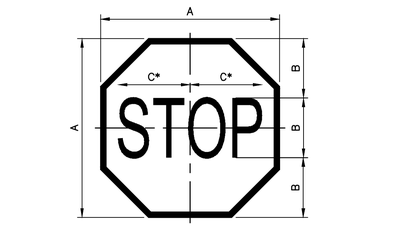

COLOR: LEGEND AND BORDER WHITE (RETROREFLECTIVE)
BACKGROUND RED (RETROREFLECTIVE)

SIGN SIZE	DIMENSIONS A	B	C	BORDER	BLANK STD
30"x30"	30	10	12 1/2	3/4	B1-750

* REDUCE SPACING 40%

R1-1 STOP SIGN

NOT TO SCALE

NOTES:
1. STOP BAR SHALL BE 2' WIDE AND EXTEND FROM THE ROAD CENTERLINE TO THE EDGE OF PAVEMENT WHERE DEPICTED ON PLAN.

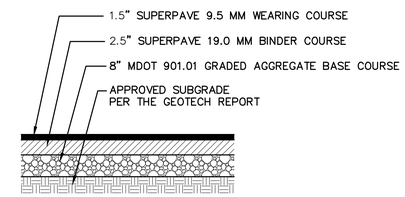

SITE PAVEMENT SECTION DETAIL

NOT TO SCALE

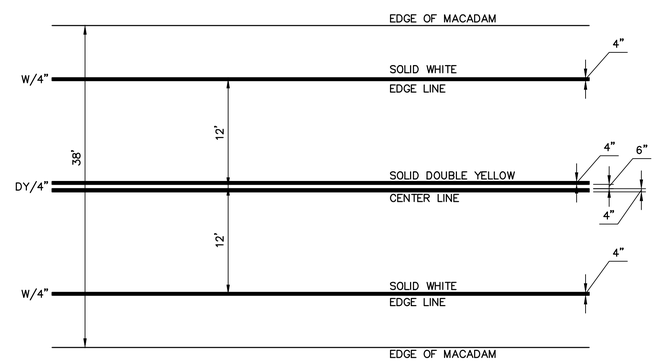

PAVEMENT MARKINGS						
PLAN SYMBOL	LINE TYPE	NUMBER OF LINES	LINE STYLE	COLOR	WIDTH	MATERIAL
DY/4"	CENTER	DOUBLE	SOLID	YELLOW	4"	THERMOPLASTIC
W/4"	EDGE	SINGLE	SOLID	WHITE	4"	THERMOPLASTIC
W/6"	LANE	SINGLE	SOLID	WHITE	6"	THERMOPLASTIC

NOTE:
ALL NEW PAVEMENT MARKINGS TO BE HOT APPLIED 40 MIL THERMOPLASTIC.

COUNTY ROAD PAVEMENT MARKING DETAIL

NOT TO SCALE

HRG
HERBERT, ROWLAND & GRUBIC, INC.
5 NORTH MAIN STREET
SUITE 3
CHAMBERSBURG, PA 17201
717. 263.2070 | hrg-inc.com

SITE PLAN
FOR
MERITUS SCHOOL OF OSTEOPATHIC MEDICINE
GRADUATE STUDENT HOUSING
1500 MT. AETNA ROAD
HAGERSTOWN, MD 21742
TAX MAP-50 GRID: 14 PARCEL: 1207
HAGERSTOWN WASHINGTON COUNTY MARYLAND

PROFESSIONAL CERTIFICATION:

STATE OF MARYLAND — SCOTT BERG — 59144 — PROFESSIONAL ENGINEER

I HEREBY CERTIFY THAT THESE DOCUMENTS WERE PREPARED OR APPROVED BY ME, AND THAT I AM DULY LICENSED PROFESSIONAL ENGINEER UNDER THE LAWS OF THE STATE OF MARYLAND. LICENSE NO. 59144, EXP. DATE: 2024-03-28

HRG PROJECT NUMBER:	R003887.0427
PLAN DATE:	2023.09.01
DRAWING SCALE:	AS SHOWN
PROJ. MANAGER:	SBB

REVISIONS

NO.	DATE	DESCRIPTION
1	2024.01.16	PER VARIOUS REVIEW AGENCY COMMENTS
2		
3		
4		
5		
6		
7		
8		
9		

SHEET TITLE:
CONSTRUCTION DETAILS - SITE

SP-23-034

SHEET: CD-1

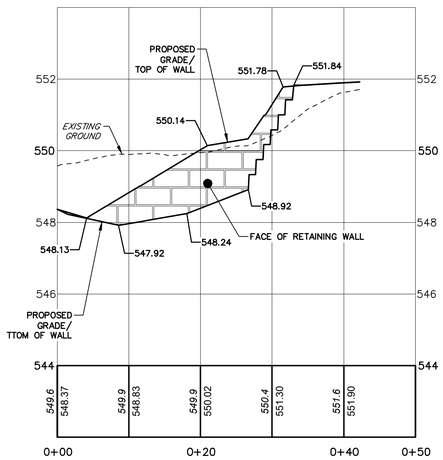

RETAINING WALL 1 PROFILE

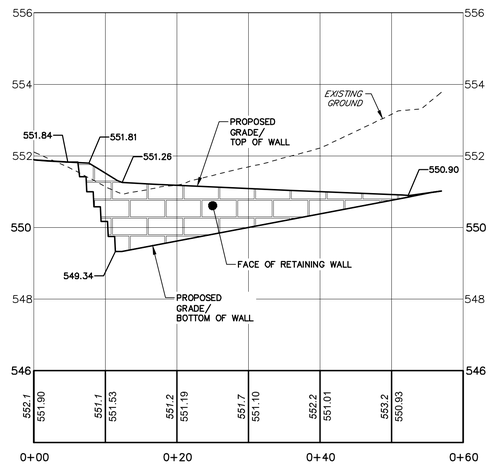

RETAINING WALL 2 PROFILE

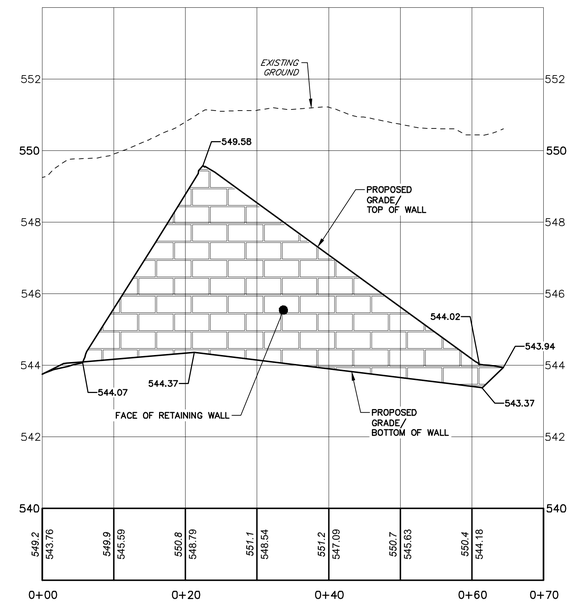

RETAINING WALL 3 PROFILE

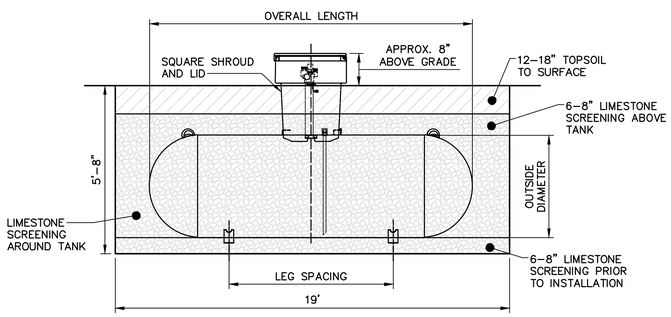

BURIAL INSTRUCTIONS AND NOTES:

1. PIT FOR TANK SHALL BE 19'L x 5'W x 5'–8"D.
2. INSTALL 6–8" OF LIMESTONE SCREENING IN THE PIT FOR TANK TO SIT ON.
3. ONCE 2 ANODES ARE ATTACHED TO TANK, DOME INSTALLED AND LINE RAN FROM TANK, THE TANK WILL BE COMPLETELY ENCASED WITH ANOTHER 10–13 TON OF LIMESTONE SCREENINGS (OR SAND).
4. AFTER TANK IS COVERED THERE SHOULD BE ABOUT 6" OF THE DOME ABOVE FINAL GRADE.
5. LINE SIZE SHOULD BE 3/4" POLY PIPE AND CAN "T" OFF TO EACH FIRE PIT AND GRILL WITH 1/2" POLY WITH A RISER COMING OUT OF THE GROUND TO TIE INTO FOR EACH APPLIANCE.
6. INSTALL GAS LINE 18–24" BELOW SURFACE.

1,000 GALLON UNDERGROUND PROPANE TANK AND PIT

NOT TO SCALE

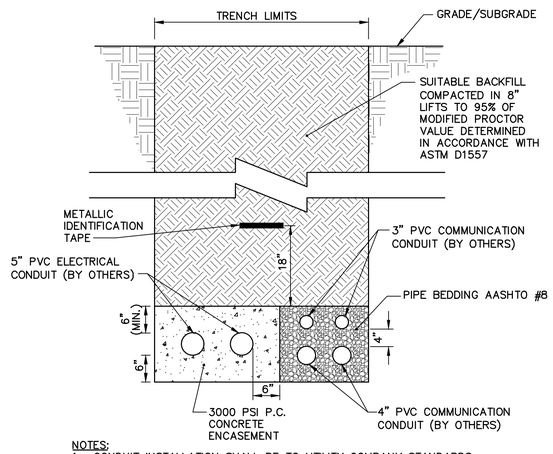

NOTES:

1. CONDUIT INSTALLATION SHALL BE TO UTILITY COMPANY STANDARDS.
2. ELECTRIC AND TELECOMM TRENCH DETAILS FROM SOURCE ARE UNKNOWN AT THE TIME OF THIS PLAN. EXACT DETAILS WILL BE PROVIDED AT A LATER DATE.

ELECTRIC AND TELECOMM TRENCH DETAIL

NOT TO SCALE

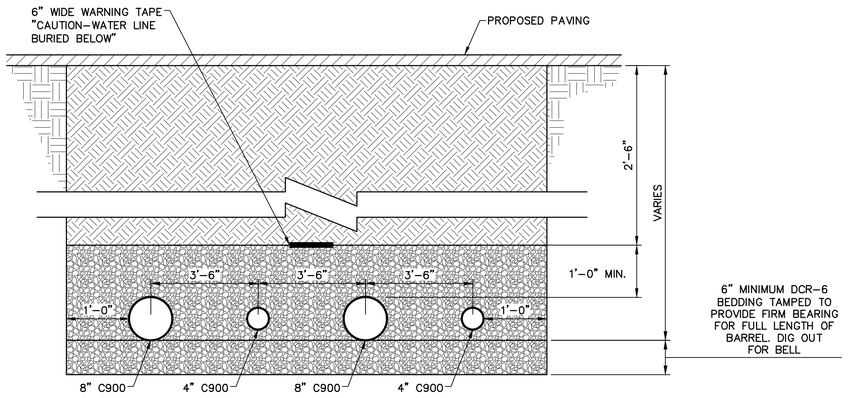

NOTES:

1. SITE CONTRACTION TO COORDINATE VERTICAL COORDINATION OF PIPE CROSSINGS TO MAINTAIN 18" OF SEPARATION.
2. BACKFILL TO BE COMPACTED IN 8" LAYERS TO 95% OF MAXIMUM DENSITY AT OPTIMUM MOISTURE AASHTO–T–99 STANDARD PROCTOR.
3. MAINTAIN MINIMUM OF 3'–6" COVER TO TOP OF PIPE UNLESS NOTED ON PLANS OR DIRECTED BY ENGINEER.

WATERLINE TRENCH DETAIL - INNOVATION DRIVE

NOT TO SCALE

HERBERT, ROWLAND & GRUBIC, INC.
5 NORTH MAIN STREET
SUITE 3
CHAMBERSBURG, PA 17201
717. 263.2070 | hrg-inc.com

SITE PLAN
FOR
MERITUS SCHOOL OF OSTEOPATHIC MEDICINE
GRADUATE STUDENT HOUSING
1500 MT. AETNA ROAD
HAGERSTOWN, MD 21742
TAX MAP: 50 GRID: 14 PARCEL: 1207
HAGERSTOWN WASHINGTON COUNTY MARYLAND

PROFESSIONAL CERTIFICATION:

STATE OF MARYLAND
SCOTT BERG
59144
PROFESSIONAL ENGINEER

I HEREBY CERTIFY THAT THESE DOCUMENTS WERE PREPARED OR APPROVED BY ME, AND THAT I AM DULY LICENSED PROFESSIONAL ENGINEER UNDER THE LAWS OF THE STATE OF MARYLAND. LICENSE NO. 59144, EXP. DATE: 2024-03-28

HRG PROJECT NUMBER:	R003887.0427
PLAN DATE:	2023.09.01
DRAWING SCALE:	AS SHOWN
PROJ. MANAGER:	SBB

REVISIONS

NO.	DATE	DESCRIPTION
1	2024.01.16	PER VARIOUS REVIEW AGENCY COMMENTS
2		
3		
4		
5		
6		
7		
8		
9		

SHEET TITLE:
CONSTRUCTION DETAILS - SITE

SP-23-034

SHEET: CD-2

Project		Catalog #		Type	
Prepared by		Notes		Date	

Invue

MSA MESA

Decorative Area Luminaire

Product Features

WaveLinx Light ARchitect™

Interactive Menu

- Order Information page 2
- Optical Distributions page 3
- Product Specifications page 4
- Energy & Performance data page 5
- Control Options page 13

Product Certifications

ISO CERTIFIED · UL CERTIFIED · DLC · DLC PREMIUM · RoHS COMPLIANT · IP66 · 1.5G VIB · 3G VIB · 5 YEAR · ida DARK SKY APPROVED · FC CLASS A CAN ICES-005

Quick Facts

- Die-cast aluminum housing and door
- Lumens packages ranging from 3,000 - 29,000 lumens
- Choice of 13 high-efficiency, patented AccuLED Optics™
- Base casting slip fits over a standard 3" O.D. tenon
- Wall, single and dual-mount configurations available
- 10kV/10vkA surge protection standard
- LED fixture features a five-year warranty

Dimensional and Mounting Details

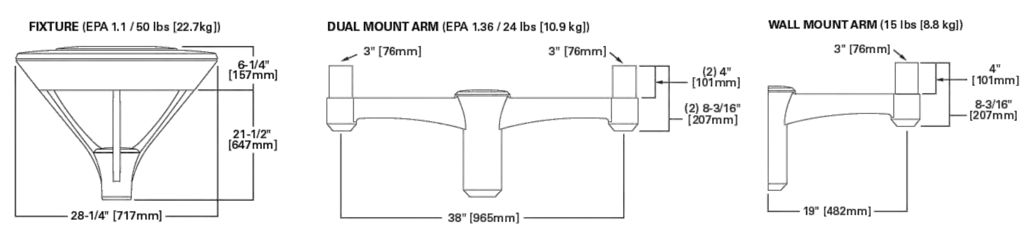

COOPER Lighting Solutions

PS516152EN **page 1**
October 27, 2022 12:54 PM

Invue — MSA Mesa

Ordering Information

SAMPLE NUMBER: **MSA-SA4A-740-U-T3-GM**

Product Family [1,2]	Light Engine: Configuration	Light Engine: Drive Current	Color Temperature	Voltage	Distribution	Finish [5]
MSA=Mesa **BAA-MSA**=Mesa Buy American Act [26] **TAA-MSA**=Mesa Trade Agreement Act Compliant [26]	**SA1**=1 Square **SA2**=2 Squares **SA3**=3 Squares **SA4**=4 Squares	**A**=615mA **B**=800mA **C**=1050mA(1A) **D**=1200mA(1.2A)	**722**=70CRI, 2200K **727**=70CRI, 2700K **730**=70CRI, 3000K **735**=70CRI, 3500K **740**=70CRI, 4000K **750**=70CRI, 5000K **760**=70CRI,6000K **827**=80CRI, 2700K **830**=80CRI, 3000K **835**=80CRI, 3500K **840**=80CRI, 4000K **AMB**=590nm, Amber [24,25]	**U**=Universal (120-277V) **9**=347V **8**=480V [3]	**T2**=Type II **T3**=Type III **T4FT**=Type IV Forward Throw **T4W**=Type IV Wide **SL2**=Type II w/Spill Control **SL3**=Type III w/Spill Control **SL4**=Type IV w/Spill Control **SLL**=90 Spill Light Eliminator Left **SLR**=90 Spill Light Eliminator Right **RW**=Rectangular Wide Type I **5NQ**=Type V Square Narrow **5MQ**=Type V Square Medium **5WQ**=Type V Square Wide	**AP**=Grey **BK**=Black **BZ**=Bronze **DP**=Dark Platinum **GM**=Graphite Metallic **WH**=White **CC**=Coastal Construction

Options (Add as Suffix)		Accessories (Order Separately) [17]
10MSP=10kV MOV Surge Protection Device **20K**=20kV UL 1449 Fused Surge Protection Device **20MSP**=20kV MOV Surge Protection Device **3**=Three Position Terminal Block **2L**=UL Listed / CSA Certified [6,7] **DIM**=External 0-10V Dimming Leads **EBP**=Emergency Battery Pack [8,23] **CBP**=Cold Weather Emergency Battery Pack [8,23] **CC**=Coastal Construction [9] **UL**=UL Listed / CSA Certified **HSS**=House Side Shield [10] **G3**=3G Vibration Rated **HA**=50°C High Ambient Temperature **IH**=Internal Dome Hinge [7] **LCF**=Light Square Trim Plate Painted to Match Housing **DALI**=DALI Driver [11] **BPC**=Button Type Photocontrol	**PR**=NEMA 3-PIN Twistlock Photocontrol Receptacle **PR7**=NEMA 7-PIN Twistlock Photocontrol Receptacle **LLPC**=Long Life Twistlock NEMA Photocontrol [12] **MS/DIM-L08**=Motion Sensor for Dimming Operation, Up to 8' Mounting Height [11,13] **MS/DIM-L20**=Motion Sensor for Dimming Operation, 9' - 20' Mounting Height [11,13] **MS/DIM-L40**=Motion Sensor for Dimming Operation, 21' - 40' Mounting Height [11,13] **LWR-LW**=Enlighted Sensor, 8'-16' MH [11,13,14] **LWR-LN**=Enlighted Sensor, 16'-40' MH [11,13,14] **ZD**=DALI-enabled 4-PIN Twistlock Receptacle [11,13] **ZW**=WaveLinx-enabled 4-PIN Twistlock Receptacle [11,13] **SWPD4XX**=WaveLinx Wireless Sensor, 7' - 15' Mounting Height [15,16,17,18] **SWPD5XX**=WaveLinx Wireless Sensor, 15' - 40' Mounting Height [15,16,17,18]	**SA6028-XX**=Dual Mount Arm [2] **SA6029-XX**=Wall Mount Arm [2] **OA/RA1013**=Photocontrol Shorting Cap **OA/RA1016**=NEMA Photocontrol - Multi-Tap **OA/RA1027**=NEMA Photocontrol - 480V **OA/RA1201**=NEMA Photocontrol - 347V **OA1223**=10kV Circuit Module Replacement **FSIR-100**=Wireless Configuration Tool for Motion Sensor [20] **LS/HSS**=House Side Shield [10,21] **SWPD4-XX**=WaveLinx Wireless Sensor, 7' - 15' Mounting Height [15,16,17,18] **SWPD5-XX**=WaveLinx Wireless Sensor, 15' - 40' Mounting Height [15,16,17,18] **WOLC-7P-10A**=WaveLinx Outdoor Control Module [22]

NOTES:
1. DesignLights Consortium® Qualified. Refer to www.designlights.org Qualified Products List under Family Models for details.
2. Customer is responsible for engineering analysis to confirm pole and fixture compatibility for all applications. Refer to our white paper WP513001EN for additional support information.
3. Only for use with 480V Wye systems. Per NEC, not for use with ungrounded systems, impedance grounded systems or corner grounded systems (commonly known as Three Phase Three Wire Delta, Three Phase High Leg Delta and Three Phase Corner Grounded Delta systems).
4. Not available with sensor options at 1.2A drive current. Not available in combination with HA high ambient and sensor options at 1A drive current.
5. Custom and RAL color matching available upon request. Consult your lighting representative at Cooper Lighting Solutions for more information.
6. Not available with LWR or SWPD sensor options. Not available with SA1 light square configuration. 2L is with MS/DIM sensors only available with UNV voltage.
7. Not available with EBP or CBP battery pack options.
8. Not available with high ambient (HA), high voltage (8 or 9), or 1.2A drive current configurations. Universal voltage (UNV) and drive currents 1A and lower only. Rated to maximum 25C ambient operating temperatures.
9. Salt spray tested to 5,000hrs per ASTM B117. Scribe rating of 9 per ASTM D1654.
10. House side shield not for use with 5NQ, 5MQ, 5WQ, or RW distributions. The Light Square trim plate is painted black when the HSS option is selected.
11. Utilizes internal step-down transformer when 347V or 480V is selected.
12. Requires PR or PR7 photocontrol receptacle option.
13. Controls system is not available with photocontrol (BPC), photocontrol receptacle (PR or PR7), or other controls systems (MS, ZD, ZW, LWR, DALI, or DIM).
14. Enlighted wireless sensors are factory installed and require network components LWP-EM-1, LWP-GW-1 and LWP-PoE8 in appropriate quantities. See website for Enlighted application information.
15. Requires 4-PIN twistlock receptacle (ZD or ZW) option.
16. Replace XX with sensor color (WH, BZ or BK).
17. Sensor passive infrared (PIR) may be overly sensitive with operating below -20°C (-4°F).
18. For this device to be field-configurable, requires WAC Gateway components WAC-PoE and WPOE-120 in appropriate quantities. Only compatible with WaveLinx system and software and requires system components to be installed for operation. See website for more WaveLinx application information.
19. Replace XX with paint color.
20. This tool enables adjustment to Motion Sensor (MS) parameters including high and low modes, sensitivity, time delay, cutoff and more. Consult your lighting representative for more information.
21. Must order one per light square when ordering as a field-installable accessory.
22. Requires 7-PIN NEMA twistlock receptacle (PR7) option. The WOLC-7 cannot be used in conjunction with other control systems (MS, ZW, ZD or LWR). Operates on 120-347V input voltages.
23. Available only with 120-277V.
24. Narrow-band 590nm +/- 5nm for wildlife and observatory use. Choose drive current A; supplied at 500mA drive current only. Exact luminaire wattage available in IES files. Available with 5WQ, 5MQ, SL2, SL3 and SL4 distributions. Can be used with HSS option.
25. Not available with HA option.
26. Only product configurations with these designated prefixes are built to be compliant with the Buy American Act of 1933 (BAA) or Trade Agreements Act of 1979 (TAA), respectively. Please refer to DOMESTIC PREFERENCES website for more information.

Product Specifications

Construction
- Die-cast aluminum main housing and permanent mold spider mount base maintain a minimum Ø.125" wall thickness.
- Integral aluminum heat sink provides superior thermal +40°C ambient with optional 50°C environments.
- Standard 1.5G vibration, 3G optional.
- Top mounted door assembly, heavy wall, diecast aluminum door maintains a nominal Ø.125 thickness
- Door includes a 4.5" stainless steel safety tether standard or an optional self-retaining interior hinge.
- Continuous silicone gasket provided to seal housing door assembly and optic tray
- Downlight lens is LED board integrated UV treated polycarbonate over optics, each individually sealed for IP66 rating.
- Four inset fasteners on underside of housing provide access to luminaire interior.
- Housing and optics IK10 impact rated.

Optics
- Choice of thirteen patented, high efficiency AccuLED Optic™ technology manufactured from injection-molded UV treated polycarbonate. Optics are precisely designed to shape the light output, maximizing efficiency and application spacing.
- AccuLED Optic technology creates consistent distributions with the scalability to meet customized application requirements
- Offered in multiple CCTs (+/-275K). For the ultimate level of spill light control, an optional house side shield accessory can be field or factory installed.

Electrical
- LED drivers mount to die-cast aluminum back housing for optimal heat sinking, operation efficacy, and prolonged life.
- Standard drivers feature electronic universal voltage (120-277V 50/60Hz), 347V 60Hz or 480V 60Hz operation, greater than 0.9 power factor, less than 20% harmonic distortion, and is suitable for operation in -40°C to 50°C ambient environments.
- All fixtures are shipped standard with 10kV/10kA common – and differential – mode surge protection.
- Lightsquares feature an IP66 enclosure rating.
- Occupancy sensor and dimming options available.

Mounting
- Fitter assembly mounts over 3" O.D. Tenon via four concealed, steel set screws and jam-setscrews.

Finish
- Housing is finished in five-stage super TGIC polyester powder coat paint, 2.5 mil nominal thickness for superior protection against fade and wear.
- Lightsquares cover plates are standard white and may be specified to match finish of luminaire housing.
- Standard colors include black, bronze, grey, white, dark platinum and graphite metallic. RAL and custom color matches available. Consult Outdoor Architectural Colors brochure for a complete selection.
- Available in Costal Construction, salt spray tested to over 5,000-hours per ASTM B117, with a scribe rating of 9 per ASTM D1654.

Warranty
- Five year limited warranty, consult website for details. www.cooperlighting.com/legal

COOPER Lighting Solutions

PS516152EN **page 2**
October 27, 2022 12:54 PM

Project		Catalog #		Type	
Prepared by		Notes		Date	

McGraw-Edison

GALN Galleon II

Area / Site Luminaire

Product Features

Light ARchitect™ BAA

Interactive Menu

- Ordering Information page 2
- Mounting Details page 3
- Optical Distributions page 5
- Product Specifications page 5
- Energy and Performance Data page 6
- Control Options page 11

Product Certifications

ISO CERTIFIED · DLC LISTED [1] · DLC LISTED PREMIUM [1] · 3G VIB · IP66 · UL CERTIFIED · ida DARK SKY APPROVED [2] · 5 YEAR

Quick Facts

- Lumen packages range from 3,300 - 73,500 (33W - 552W)
- 17 optical distributions
- Efficacy up to 159 lumens per watt

Connected Systems

- WaveLinx Lite
- WaveLinx

Dimensional Details

Standard Pole Mount Arm

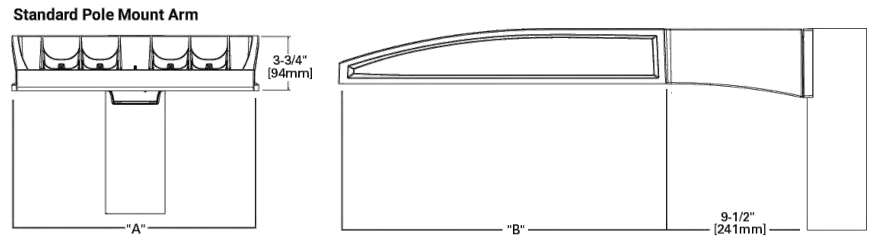

Pole Drilling Pattern

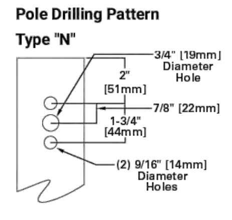

Number of Light Squares	Width "A"	Housing Length "B"	Weight with Standard or QM Arm	EPA with Standard or QM Arm
1-4	16"	22"	29 lb	0.95
5-6	22"	22"	39 lb	0.95
7-9	22"	28-1/8"	48 lb	1.1

NOTES:
For arm selection requirements and additional line art, see Mounting Details section.

NOTES:
1. Visit https://www.designlights.org/search/ to confirm qualification. Not all product variations are DLC qualified.
2. IDA Certified (3000K CCT and warmer only, fixed mounting options)

COOPER Lighting Solutions

PS500052EN **page 1**
September 29, 2023 1:22 PM

McGraw-Edison — GALN Galleon II

Ordering Information

SAMPLE NUMBER: **GALN-SA4C-740-U-T4FT-GM**

Product Family [1,2]	Light Engine: Configuration	Light Engine: Drive Current	Color Temperature	Voltage	Distribution	Mounting	Finish
GALN=Galleon II **BAA-GALN**=Galleon II Buy American Act Compliant [27] **TAA-GALN**=Galleon II Trade Agreements Act Compliant [27]	**SA1**=1 Square **SA2**=2 Squares **SA3**=3 Squares **SA4**=4 Squares **SA5**=5 Squares **SA6**=6 Squares **SA7**=7 Squares **SA8**=8 Squares **SA9**=9 Squares	**A**=600mA **B**=800mA **C**=1000mA **D**=1200mA [4,17] **Z**=Configured [33]	**722**=70CRI, 2200K **727**=70CRI, 2700K **730**=70CRI, 3000K **735**=70CRI, 3500K **740**=70CRI, 4000K **750**=70CRI, 5000K **760**=70CRI, 6000K **827**=80CRI, 2700K **830**=80CRI, 3000K **835**=80CRI, 3500K **840**=80CRI, 4000K **930**=90CRI, 3000K **935**=90CRI, 3500K **940**=90CRI, 4000K **950**=90CRI, 5000K **AMB**=Amber, 590nm [15,17]	**U**=120-277V **H**=347V-480V [7,30] **1**=120V **2**=208V **3**=240V **4**=277V **8**=480V [7,30] **9**=347V [7] **DV**=277V-480V DuraVolt Drivers [29,30,31]	**T1**=Type I **T2**=Type II **T2R**=Type II Roadway **T3**=Type III **T3R**=Type III Roadway **T4FT**=Type IV Forward Throw **T4W**=Type IV Wide **5NQ**=Type V Narrow **5MQ**=Type V Square Medium **5WQ**=Type V Square Wide **SL2**=Type II w/Spill Control **SL3**=Type III w/Spill Control **SL4**=Type IV w/Spill Control **SLL**=90° Spill Light Eliminator Left **SLR**=90° Spill Light Eliminator Right **RW**=Rectangular Wide Type I **AFL**=Automotive Frontline	**[Blank]**=Standard Pole Mount Arm **QU**=Quick Mount Universal Arm **QM**=Pole Mount Arm with Quick Mount Adaptor **PA**=Pole Mount, Adjustable **SP**=3" Slipfitter, Adjustable [8] **SP2**=2-3/8" Slipfitter, Adjustable [8] **QMA**=Quick Mount Mast Arm, Fixed **MA**=Mast Arm, Fixed **WM**=Wall Mount, Fixed **WA**=Wall Mount, Adjustable **UP**=Upswept Arm	**AP**=Grey **BZ**=Bronze **BK**=Black **DP**=Dark Platinum **GM**=Graphite Metallic **WH**=White **RALXX**=Custom Color

Options (Add as Suffix)	Controls and Systems Options (Add as Suffix)	Accessories (Order Separately) [28]
DIM=External 0-10V Dimming Leads [20] **F**=Single Fuse (120, 277 or 347V Specify Voltage) **FF**=Double Fuse (208, 240 or 480V Specify Voltage) **20K**=20kV UL 1449 fused surge protective device [10] **2L**=Two Circuits [10] **HA**=50°C High Ambient **HSS**=Installed House Side Shield [18] **GRSBK**=Glare Reducing Shield, Black [23] **GRSWH**=Glare Reducing Shield, White [23] **LCF**=Light Square Trim Painted to Match Housing [26] **TH**=Tool-less Door Hardware [5] **CC**=Coastal Construction finish [3] **L90**=Optics Rotated 90° Left **R90**=Optics Rotated 90° Right **AHD145**=After Hours Dim, 5 Hours [22] **AHD245**=After Hours Dim, 6 Hours [22] **AHD255**=After Hours Dim, 7 Hours [22] **AHD355**=After Hours Dim, 8 Hours [22] **DALI**=DALI Drivers	**BPC**=Button Type Photocontrol. Must specify voltage 120V, 208V, 240V or 277V. [6] **PR**=NEMA 3-PIN Photocontrol Receptacle **PR7**=NEMA 7-PIN Photocontrol Receptacle [21] **FADC**=Field Adjustable Dimming Controller [32] **PSC**=Photocontrol Shorting Cap **SPB2**=Dimming Motion Sensor, 9'-20' mounting [24] **SPB4**=Dimming Motion Sensor, 21'-40' mounting [24] **SPB2/X**=Dimming Motion Sensor, limited square count, 9'-20' mounting [24] **SPB4/X**=Dimming Motion Sensor, limited square count, 21'-40' mounting [24] **MS/DIM-L20**=Motion Sensor for Dimming Operation, 9'-20' Mounting [34] **MS/DIM-L40**=Motion Sensor for Dimming Operation, 21'-40' Mounting [34] **ZW**=WaveLinx-enabled 4-PIN Twistlock Receptacle [19] **ZD**=SR Driver-enabled 4-PIN Twistlock Receptacle [19] **ZW-WOBXX**=WaveLinx Lite, Dimming Motion and Daylight, Bluetooth Programmable, 7' - 15' Mounting [19,12] **ZW-WOFXX**=WaveLinx Lite, Dimming Motion and Daylight, Bluetooth Programmable, 15' - 40' Mounting [19,12] **ZD-WOBXX**=WaveLinx Lite, SR Driver, Dimming Motion and Daylight, Bluetooth Programmable, 7' - 15' Mounting [19,12] **ZD-WOFXX**=WaveLinx Lite, SR Driver, Dimming Motion and Daylight, Bluetooth Programmable, 15' - 40' Mounting [19,12] **ZW-SWPD4XX**=WaveLinx Pro, Dimming Motion and Daylight, WAC Programmable, 7' - 15' Mounting [19,12,13] **ZW-SWPD5XX**=WaveLinx Pro, Dimming Motion and Daylight, WAC Programmable, 15' - 40' Mounting [19,12,13] **ZD-SWPD4XX**=WaveLinx Pro, SR Driver, Dimming Motion and Daylight, WAC Programmable, 7' - 15' Mounting [19,12,13] **ZD-SWPD5XX**=WaveLinx Pro, SR Driver, Dimming Motion and Daylight, WAC Programmable, 15' - 40' Mounting [19,12,13] **DIM10-L20**=Synapse Occupancy Sensor (9'-20' Mounting) [19] **DIM10-L40**=Synapse Occupancy Sensor (21'-40' Mounting) [19]	**OA/RA1016**=NEMA Photocontrol Multi-Tap - 105-285V **OA/RA1027**=NEMA Photocontrol - 480V **OA/RA1201**=NEMA Photocontrol - 347V **OA/RA1013**=Photocontrol Shorting Cap **OA/RA1014**=120V Photocontrol **MA1252**=10kV Surge Module Replacement **MA1036-XX**=Single Tenon Adapter for 2-3/8" O.D. Tenon **MA1037-XX**=2@180° Tenon Adapter for 2-3/8" O.D. Tenon **MA1197-XX**=3@120° Tenon Adapter for 2-3/8" O.D. Tenon **MA1188-XX**=4@90° Tenon Adapter for 2-3/8" O.D. Tenon **MA1189-XX**=2@90° Tenon Adapter for 2-3/8" O.D. Tenon **MA1190-XX**=3@90° Tenon Adapter for 2-3/8" O.D. Tenon **MA1191-XX**=2@120° Tenon Adapter for 2-3/8" O.D. Tenon **MA1038-XX**=Single Tenon Adapter for 3-1/2" O.D. Tenon **MA1039-XX**=2@180° Tenon Adapter for 3-1/2" O.D. Tenon **MA1192-XX**=3@120° Tenon Adapter for 3-1/2" O.D. Tenon **MA1193-XX**=4@90° Tenon Adapter for 3-1/2" O.D. Tenon **MA1194-XX**=2@90° Tenon Adapter for 3-1/2" O.D. Tenon **MA1195-XX**=3@90° Tenon Adapter for 3-1/2" O.D. Tenon **SRA238**=Adapter kit for mounting 3" SP arm to 2-3/8" O.D. vertical tenon **FSIR-100**=Wireless Configuration Tool for MS/DIM [34] **LS/HSS**=Field Installed House Side Shield [9,18] **LS/GRSBK-2PK**=Glare Reducing Shield, Black [9,23] **LS/GRSWH-2PK**=Glare Reducing Shield, White [9,23] **LS/PFS**=Perimeter Shield, Black [16] **WOLC-7P-10A**=WaveLinx Outdoor Control Module [11,19] **WOB-XX**=WaveLinx Lite Sensor, Dimming Motion and Daylight, Bluetooth Programmable, 7' - 15' Mounting [12,14,19] **WOF-XX**=WaveLinx Lite Sensor, Dimming Motion and Daylight, Bluetooth Programmable, 15' - 40' Mounting [12,14,19] **SWPD4-XX**=WaveLinx Sensor, Dimming Motion and Daylight, WAC Programmable, 7' - 15' Mounting [12,13,14,19] **SWPD5-XX**=WaveLinx Sensor, Dimming Motion and Daylight, WAC Programmable, 15' - 40' Mounting [12,13,14,19]

NOTES:
1. Customer is responsible for engineering analysis to confirm pole and fixture compatibility for all applications. Refer to our white paper WP513001EN for additional support information.
2. DesignLights Consortium® Qualified. Refer to www.designlights.org Qualified Products List under Family Models for details.
3. Coastal construction finish salt spray tested to over 5,000-hours per ASTM B117, with a scribe rating of 9 per ASTM D1654. Not available with TH option.
4. Drive current 1200mA not available with color temperatures 722, 727, 827, 830 or 930 when the HSS option is selected.
5. TH option not 3G rated. Not available with Coastal Construction (CC) option.
6. Not available with voltage options H, 8 or 9.
7. Requires the use of an internal step down transformer when combined with sensor options. Not available in combination with the HA high ambient and sensor options at 1A.
8. SP arm limited to 3" O.D. vertical tenon. SP2 limited to 2-3/8" O.D. vertical tenon.
9. One required for each Light Square.
10. 2L is not available with SPB at 347V or 480V. Not available with WaveLinx or Enlighted sensors, or 20kV surge option.
11. Requires PR7.
12. Replace XX with sensor color (WH, BZ or BK.)
13. WAC Gateway required to enable field-configurability: Order WAC-PoE and WPOE-120 (10V to PoE injector) power supply if needed. WAC not required for LC Bluetooth sensors.
14. Requires ZW or ZD receptacle.
15. Narrow-band 590nm +/- 5nm for wildlife and observatory use. Choose drive current A; supplied at 500mA drive current only. Exact luminaire wattage available in IES files. Available with 5WQ, 5MQ, SL2, SL3 and SL4 distributions. Can be used with HSS option.
16. Set of 4 pcs. One set required per Light Square.
17. Not available with HA option.
18. Not for use with T1, 5NQ, 5MQ, 5WQ or RW optics.
19. Cannot be used with other control options.
20. Low voltage control lead brought out 18" outside fixture. Not available with DALI or integrated controls options
21. Not available if any SPB, LWR, or WaveLinx sensor is selected. Motion sensor has an integral photocell.
22. Requires the use of BPC photocontrol or the PR7 or PR photocontrol receptacle with photocontrol accessory.
23. Not for use with T1, T4FT, T4W or SL4 optics.
24. Sensor configuration mobile application required for configuration. See controls page for details.
25. Replace X with number of Light Squares controlled by the SPB, referencing the "SPB/X Availability Table" on the controls page.
26. Not available with HSS, GRSWH or GRSBK.
27. Only product configurations with these designated prefixes are built to be compliant with the Buy American Act of 1933 (BAA) or Trade Agreements Act of 1979 (TAA), respectively. Please refer to DOMESTIC PREFERENCES website for more information. Components shipped separately may be separately analyzed under domestic preference requirements.
28. For BAA or TAA requirements, Accessories sold separately will be separately analyzed under domestic preference requirements. Consult factory for further information.
29. DuraVolt drivers feature added protection from power quality issues such as loss of neutral, transients and voltage fluctuations. Visit www.signify.com/duravolt for more information.
30. 480V not to be used with ungrounded or impedance grounded systems.
31. Not available in 1 square configuration at 800mA or below. Not available with any control option except SPB.
32. Cannot be used with PR7 or other motion response control options.
33. Use GALN Product Configurator to specify lumen output, drive current and wattage. Not available with AMB.
34. Uses the FSP-211 motion sensor. The FSIR-100 configuration tool is required to adjust parameters including high and low modes, sensitivity, time delay, cutoff and more. Consult your lighting representative at Cooper Lighting Solutions for more information.

LumenSafe Integrated Network Security Camera Technology Options (Add as Suffix)

Product Family	Camera Type	Data Backhaul	
L=LumenSafe Technology	**D**=Standard Dome Camera **H**=Hi-Res Dome Camera **Z**=Remote PTZ Camera	**C**=Cellular, No SIM **A**=Cellular, AT&T **V**=Cellular, Verizon **S**=Cellular, Sprint	**R**=Cellular, Rogers **W**=Wi-Fi Networking w/ Omni-Directional Antenna **E**=Ethernet Networking

COOPER Lighting Solutions

PS500052EN **page 2**
September 29, 2023 1:22 PM

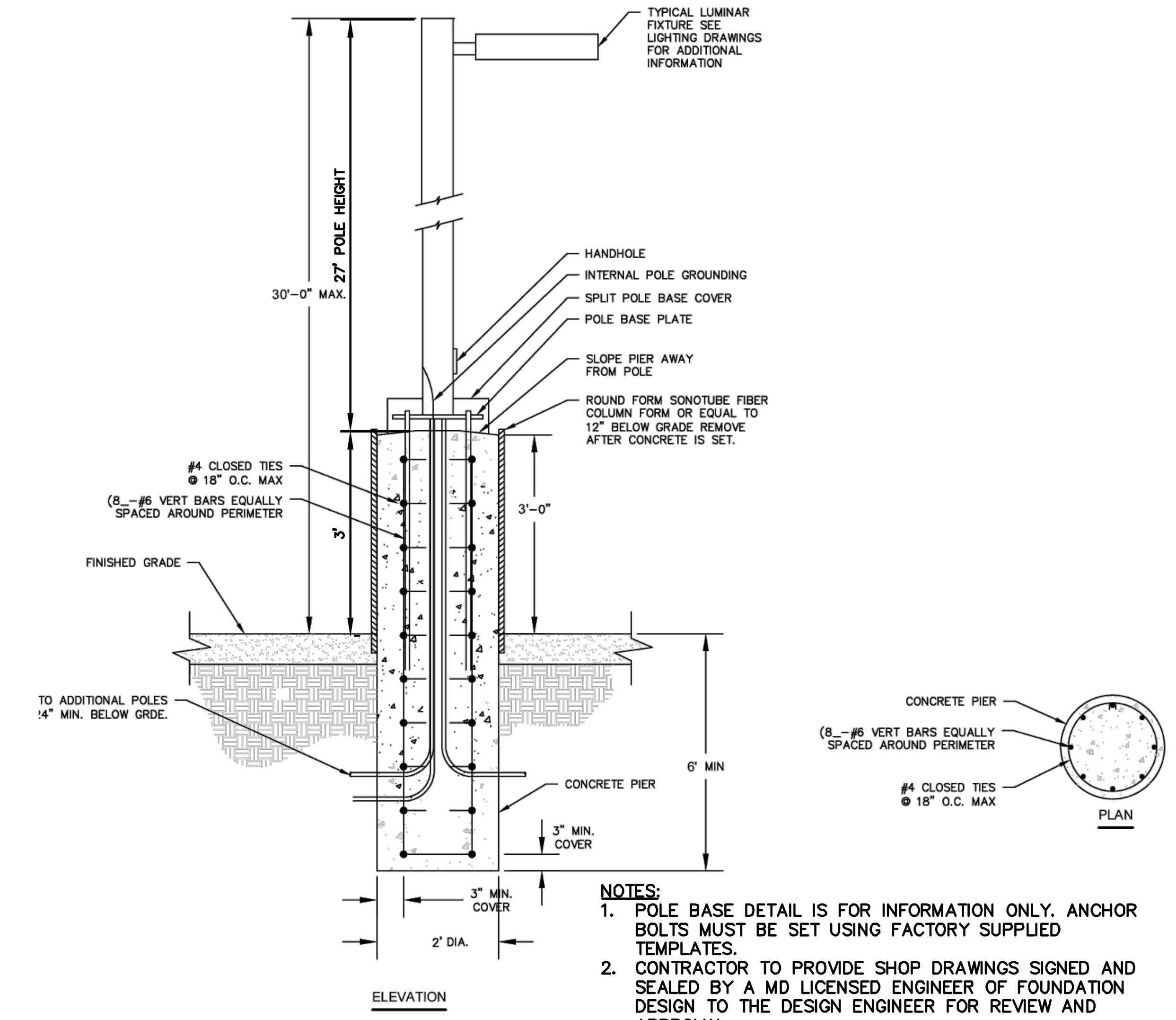

NOTES:
1. POLE BASE DETAIL IS FOR INFORMATION ONLY. ANCHOR BOLTS MUST BE SET USING FACTORY SUPPLIED TEMPLATES.
2. CONTRACTOR TO PROVIDE SHOP DRAWINGS SIGNED AND SEALED BY A MD LICENSED ENGINEER OF FOUNDATION DESIGN TO THE DESIGN ENGINEER FOR REVIEW AND APPROVAL.

SITE LIGHTING POLE DETAIL WITH CONCRETE FOUNDATION - 30' MOUNTING HEIGHT

NOT TO SCALE

HRG
HERBERT, ROWLAND & GRUBIC, INC.
5 NORTH MAIN STREET
SUITE 3
CHAMBERSBURG, PA 17201
717. 263.2070 | hrg-inc.com

SITE PLAN
FOR
MERITUS SCHOOL OF OSTEOPATHIC MEDICINE
GRADUATE STUDENT HOUSING
1500 MT. AETNA ROAD
HAGERSTOWN, MD 21742
TAX MAP: 50 / GRID: 14 / PARCEL: 1207
HAGERSTOWN WASHINGTON COUNTY MARYLAND

PROFESSIONAL CERTIFICATION:

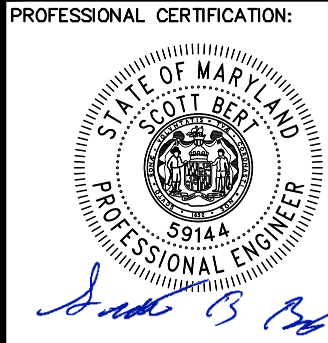

I HEREBY CERTIFY THAT THESE DOCUMENTS WERE PREPARED OR APPROVED BY ME, AND THAT I AM DULY LICENSED PROFESSIONAL ENGINEER UNDER THE LAWS OF THE STATE OF MARYLAND. LICENSE NO. 59144, EXP. DATE: 2024-03-28

HRG PROJECT NUMBER:	R003887.0427
PLAN DATE:	2023.09.01
DRAWING SCALE:	AS SHOWN
PROJ. MANAGER:	SBB

REVISIONS

NO.	DATE	DESCRIPTION
1	2024.01.16	PER VARIOUS REVIEW AGENCY COMMENTS
2		
3		
4		
5		
6		
7		
8		
9		

SHEET TITLE:
CONSTRUCTION DETAILS - LIGHTING

SP-23-034

SHEET: **CD-3** **45 OF 81**

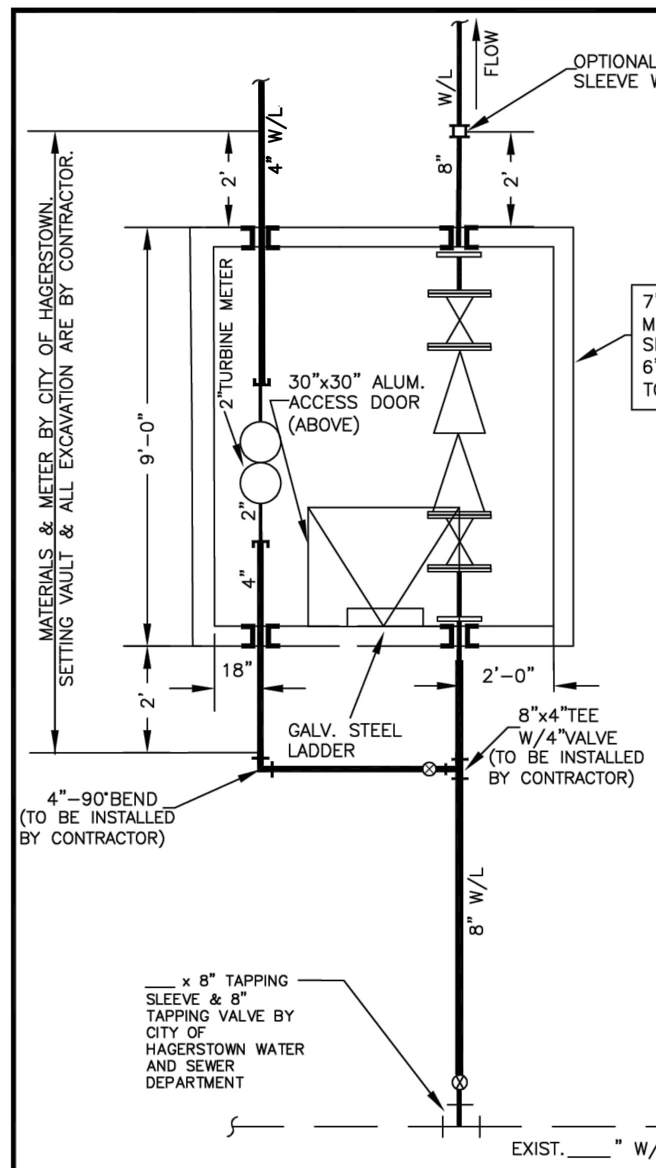

NOTES:
1. VAULT, LADDER AND DOOR TO BE ACQUIRED BY OWNER/DEVELOPER AND DELIVERED TO SITE AND SET THE VAULT. (USE A.C. MILLER "HAGERSTOWN STANDARD" ONLY). THE TOP OF THE VAULT LID NEEDS TO BE REMOVABLE.
2. THE CONTRACTOR IS RESPONSIBLE FOR ALL EXCAVATION, SHORING, RESTORATION, BACKFILL, PAVING, TRAFFIC CONTROL, PERMITS, VAULT, ALL PIPING (UNLESS OTHERWISE SPECIFIED) AND APPURTENANCES. CONTRACTOR TO INSTALL ALL VALVE BOXES, PIPE TO VAULT AND PRECAST VAULT.
3. CONTRACTOR TO BACKFILL AROUND VAULT UP TO BOTTOM OF PIPE IMMEDIATELY AFTER VAULT IS SET.
4. NO BENDS PERMITTED BETWEEN THE MAIN VALVE AND VAULT.
5. ENTIRE ASSEMBLY TO BE PRESSURE TESTED FROM THE MAIN TO UPSTREAM O.S.&Y. VALVE TO CITY OF HAGERSTOWN WATER AND SEWER DEPT. STANDARDS.
6. ALL JOINTS BETWEEN THE MAIN AND METER ASSEMBLY TO BE RESTRAINED.
7. TOP OF VAULT EXCLUDING THE TOP SLAB TO BE LEVEL IN ALL DIRECTIONS 1"±. PIPING AND VAULT TO BE PERPENDICULAR TO WATER MAIN. MAXIMUM ALLOWABLE HORIZ. OR VERT. DEFLECTION IS 1" PER 10'.
8. FOR INSTALLATION REQUIRING A "WET TAP" ON EXISTING MAINS. THE MATERIALS AND INSTALLATION TO BE MADE BY CITY OF HAGERSTOWN WATER & SEWER DEPARTMENT.
9. CONTRACTOR SHALL CORE DRILL THE PIPE OPENING INTO AND OUT OF THE VAULT FOR THE METER INSTALLATION.
10. VAULT SHALL BE WATER TIGHT.

8" FIRE LINE W/DOMESTIC SERVICE DETAIL

CITY OF HAGERSTOWN, MARYLAND
HAGERSTOWN WATER & SEWER DEPARTMENT
STANDARD WATER DETAIL
DATE: FEB.2020
SCALE : NONE

NOTES:
1. ALL CONCRETE TO BE 2,500 P.S.I.
2. CARRY CONCRETE TO UNDISTURBED EARTH.
3. ALL DIMENSIONS SHOWN ARE MINIMUM.
4. NO CONCRETE SHALL COVER FITTING HARDWARE.
5. COVER FITTING PIPE WITH POLYETHYLENE WRAP 5 MIL. OR GREATER.

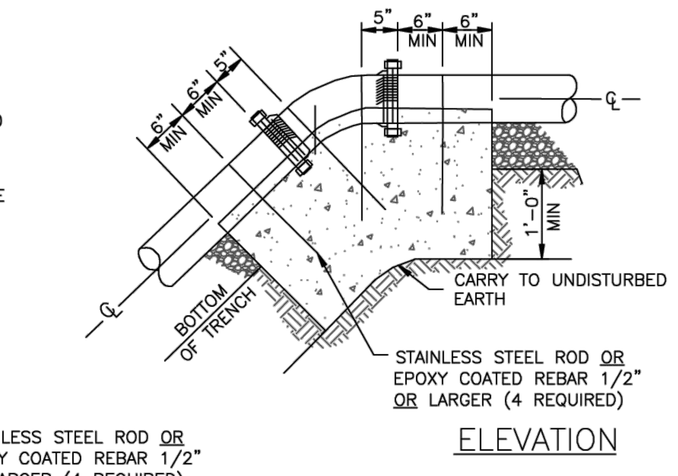

ELEVATION

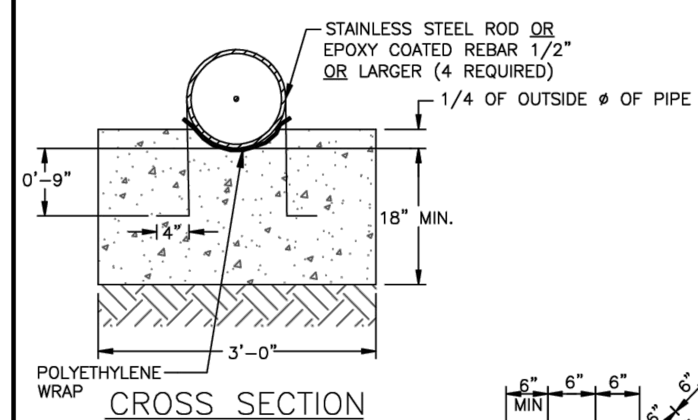

CROSS SECTION

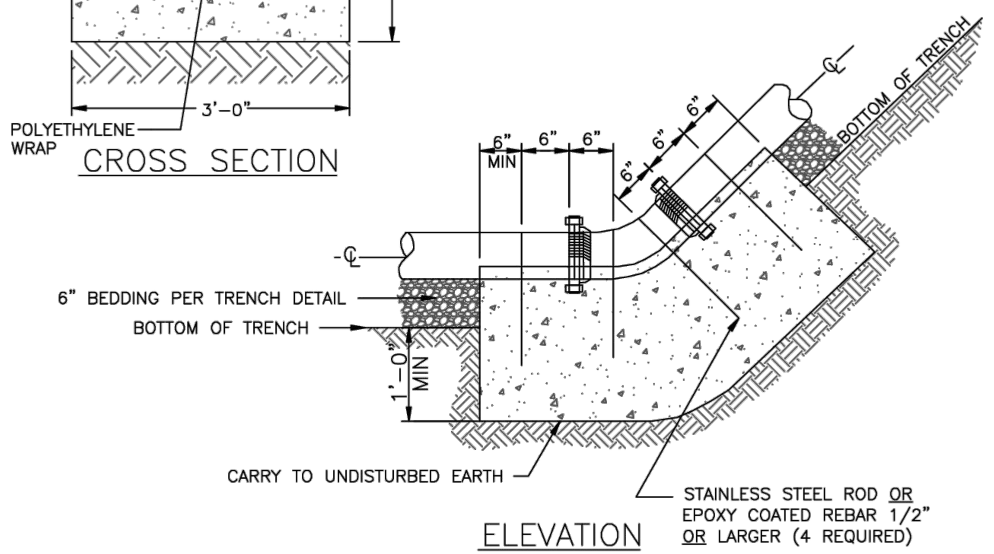

ELEVATION

© CITY OF HAGERSTOWN, MD, 2002

CITY OF HAGERSTOWN UTILITIES DEPARTMENT–WATER DIVISION
ISSUE DATE: MARCH 2009
REVISIONS
ANCHORAGES FOR MECHANICAL JOINT BENDS
Plate W-012

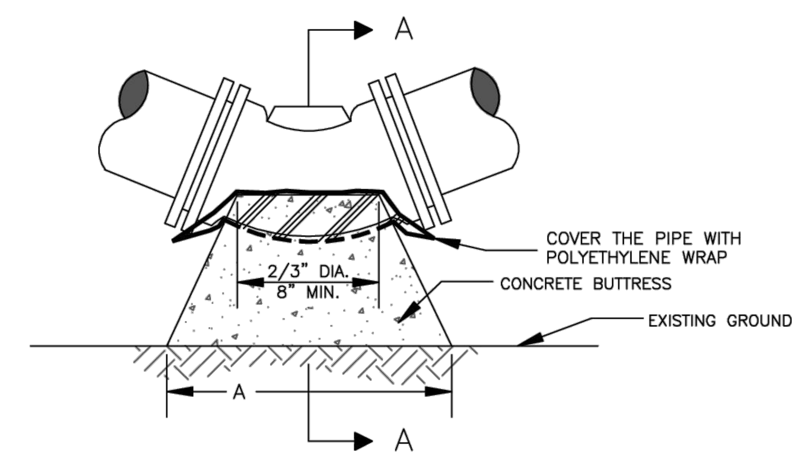

PLAN

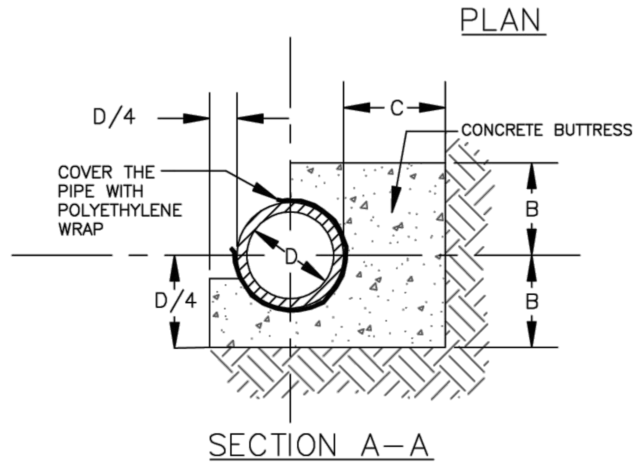

SECTION A–A

NOTES:
1. ALL CONCRETE TO BE 2,500 P.S.I.
2. CARRY CONCRETE TO UNDISTURBED EARTH.
3. ALL DIMENSIONS SHOWN ARE MINIMUM.
4. NO CONCRETE SHALL COVER FITTING HARDWARE.
5. COVER FITTING WITH POLYETHYLENE WRAP 5 MIL. OR GREATER.

	45°			22-1/2°			11-1/4°		
DIA.	A	B	C	A	B	C	A	B	C
4"	1'-0"	0'-6"	0'-9"	0'-8"	0'-6"	0'-9"	0'-8"	0'-6"	0'-9"
6"	1'-3"	0'-7"	0'-9"	0'-9"	0'-7"	0'-9"	0'-8"	0'-7"	0'-9"
8"	2'-0"	0'-8"	0'-9"	1'-0"	0'-8"	0'-9"	0'-8"	0'-8"	0'-9"
10"	2'-6"	0'-9"	0'-11"	1'-6"	0'-9"	0'-10"	0'-10"	0'-9"	0'-9"
12"	2'-11"	0'-11"	1'-2"	1'-9"	0'-10"	0'-11"	1'-0"	0'-10"	0'-9"
16"	3'-8"	1'-3"	1'-5"	2'-4"	1'-0"	1'-2"	1'-4"	1'-0"	0'-9"
20"	4'-9"	1'-6"	1'-10"	3'-2"	1'-2"	1'-4"	1'-8"	1'-2"	0'-10"
24"	6'-1"	1'-8"	1'-11"	4'-0"	1'-4"	1'-6"	2'-0"	1'-4"	1'-0"
30"	7'-9"	2'-0"	3'-1"	5'-0"	1'-7"	1'-9"	2'-6"	1'-7"	1'-1"
36"	8'-11"	2'-6"	3'-4"	5'-9"	2'-0"	2'-0"	3'-0"	1"-11"	1'-2"

© CITY OF HAGERSTOWN, MD, 2002

CITY OF HAGERSTOWN UTILITIES DEPARTMENT–WATER DIVISION
ISSUE DATE: MARCH 2009
REVISIONS
BUTTRESS FOR HORIZONTAL MECHANICAL JOINT BENDS LESS THAN 90°
Plate W-011

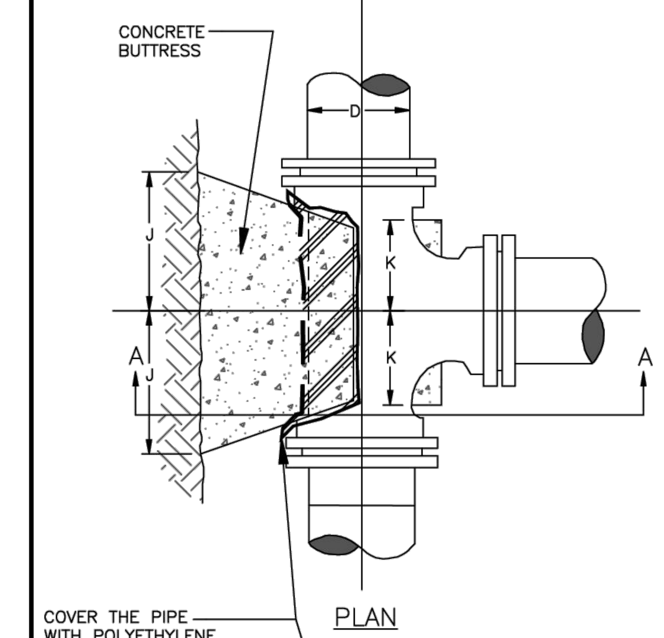

PLAN

D	H	I	J	K
4"	0'-9"	0'-6"	0'-9"	0'-5"
6"	0'-9"	0'-8"	0'-9"	0'-6"
8"	0'-9"	0'-10"	1'-0"	0'-8"
10"	0'-10"	1'-0"	1'-3"	0'-8"
12"	1'-0"	1'-3"	1'-5"	0'-8"
16"	1'-2"	1'-8"	1'-10"	0'-10"
20"	1'-4"	2'-1"	2'-3"	1'-2"
24"	1'-6"	2'-6"	2'-8"	1'-4"
30"	1'-9"	3'-1"	3'-4"	1'-6"
36"	2'-0"	3'-9"	3'-11"	1'-10"

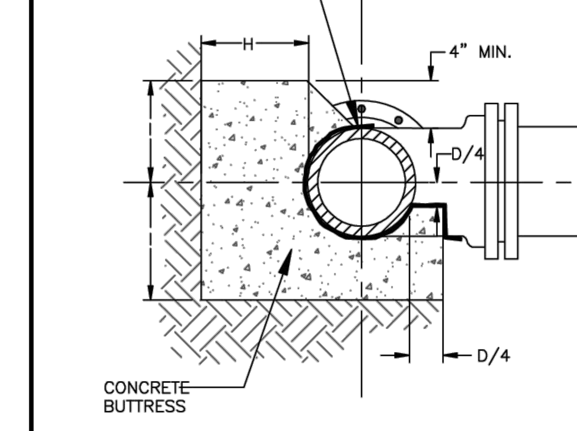

SECTION A–A

NOTES:
1. ALL CONCRETE TO BE 2,500 P.S.I.
2. CARRY CONCRETE TO UNDISTURBED EARTH.
3. ALL DIMENSIONS SHOWN ARE MINIMUM.
4. NO CONCRETE SHALL COVER FITTING HARDWARE.
5. COVER FITTING WITH POLYETHYLENE WRAP 5 MIL. OR GREATER.

© CITY OF HAGERSTOWN, MD, 2002

CITY OF HAGERSTOWN UTILITIES DEPARTMENT–WATER DIVISION
ISSUE DATE: MARCH 2009
REVISIONS
BUTTRESS FOR MECHANICAL JOINT TEES
Plate W-010

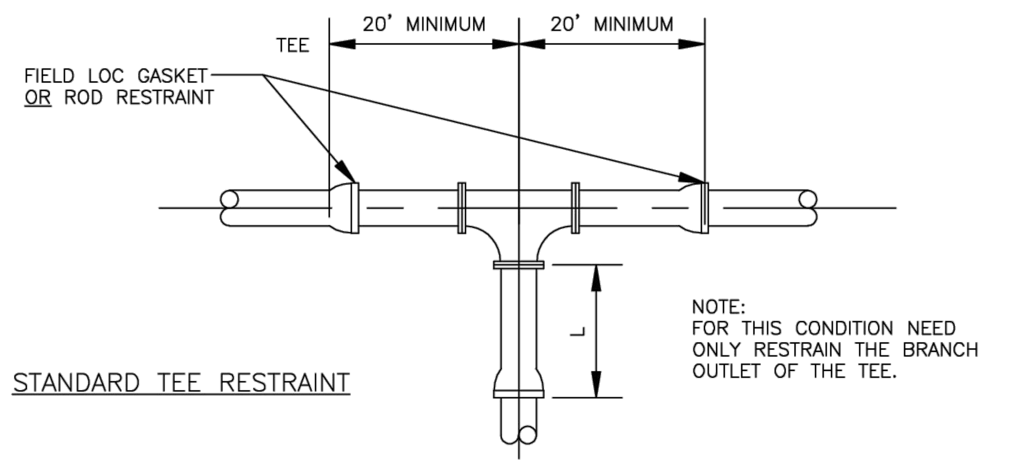

STANDARD TEE RESTRAINT

NOTE:
FOR THIS CONDITION NEED ONLY RESTRAIN THE BRANCH OUTLET OF THE TEE.

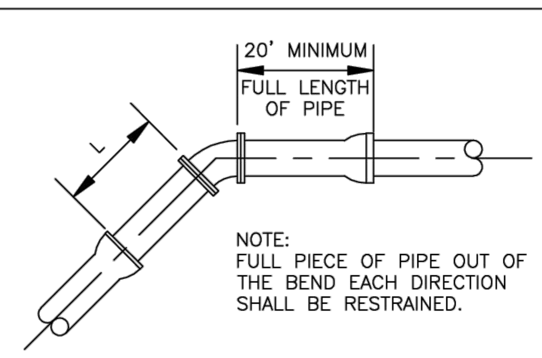

VERTICAL BEND

NOTE:
FULL PIECE OF PIPE OUT OF THE BEND EACH DIRECTION SHALL BE RESTRAINED.

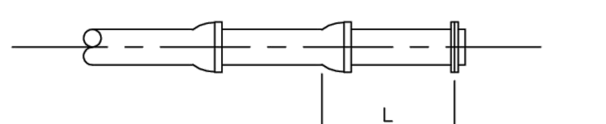

DEAD END/EACH SIDE OF VALVE

NOTE:
NORMAL PRACTICE IS A CONCRETE BUTTRESS AT THE END OF THE MAIN WITH 2" BLOWOFF.

GENERAL NOTE: L=FULL LENGTH OF PIPE (MINIMUM 20 FEET)

© CITY OF HAGERSTOWN, MD, 2002

CITY OF HAGERSTOWN UTILITIES DEPARTMENT–WATER DIVISION
ISSUE DATE: MARCH 2009
REVISIONS
STANDARD RESTRAINT TEE, DEAD END AND BEND
Plate W-009

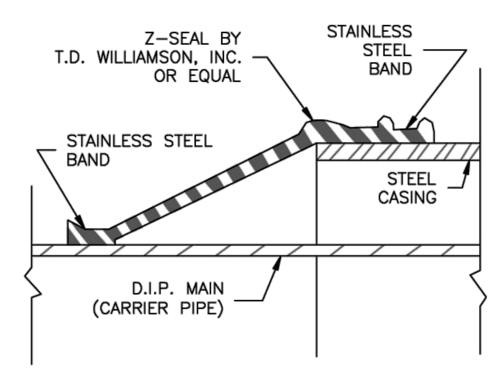

END SEAL INSTALLATION

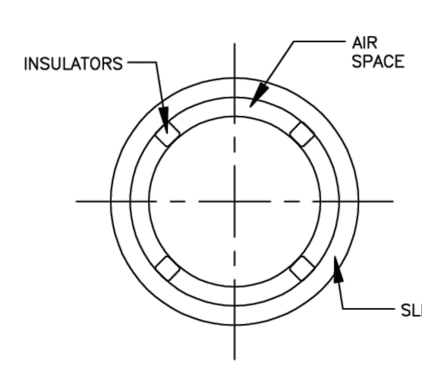

SECTION A–A

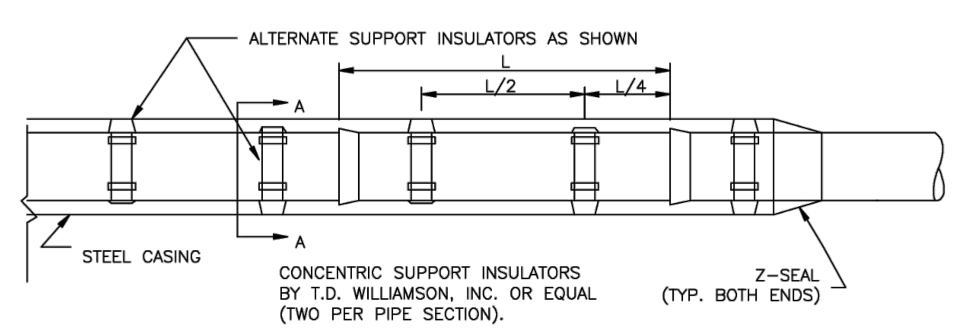

LOCATION OF INSULATORS

NOMINAL DIAMETERS	
MAIN	CASING–INSIDE DIAMETER
4"	8"
6"	10"
8"	12"
10"	16"
12"	18"
14"	20"
16"	22"
18"	24"
20"	28"
24"	32"

NOTES:
1. CASING SHALL CONFORM TO AWWA C202. WALL THICKNESS ON SIZES THRU 10" SHALL BE 1/4", OTHERS SHALL BE 3/8".
2. DUCTILE IRON CARRIER PIPE SHALL BE COATED IN ACCORDANCE WITH AWWA C–104.
3. SEE MANUFACTURERS SPECIFICATIONS FOR THE USE OF FIELD LOC'S.
4. USE OF MECHANICAL JOINT PIPE AS DIRECTED BY CITY OF HAGERSTOWN WATER/SEWER DIVISION INSPECTOR.

© CITY OF HAGERSTOWN, MD, 2002

CITY OF HAGERSTOWN UTILITIES DEPARTMENT–WATER DIVISION
ISSUE DATE: MARCH 2009
REVISIONS
CASING FOR MAIN UNDER HIGHWAY
Plate W-008

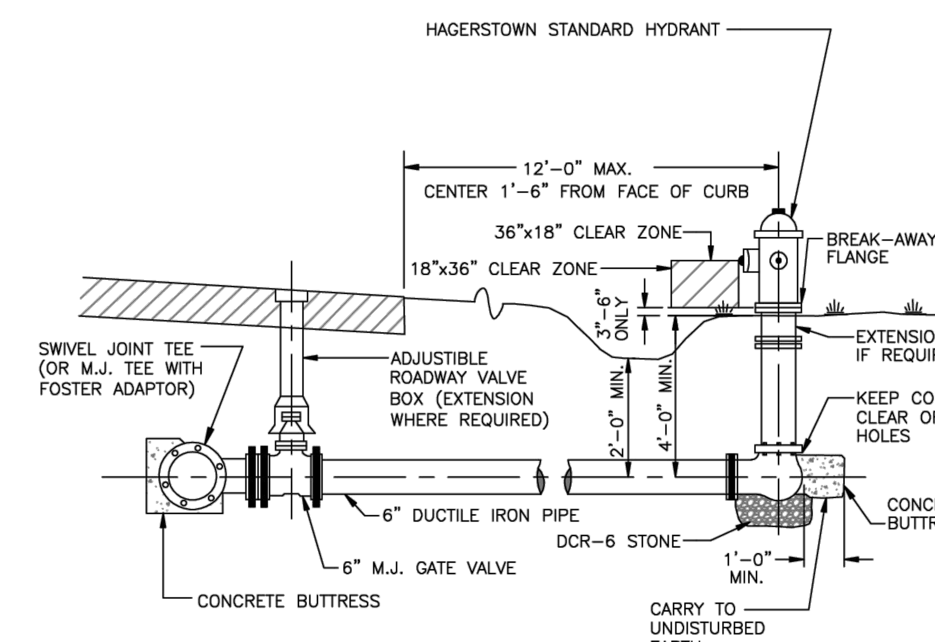

NOTE:
1. ALL PIPE MUST BE RESTRAINED FROM MAIN TO FIRE HYDRANT TO ELIMINATE CONCRETE BUTTRESS.
2. COVER FITTING WITH POLYETHYLENE WRAP 5 MIL. OR GREATER.
3. **ALL FIRE HYDRANTS BEYOND THE WATER METER VAULT SHALL BE PRIVATE AND SHALL BE PAINTED RED.**

© CITY OF HAGERSTOWN, MD, 2002

CITY OF HAGERSTOWN UTILITIES DEPARTMENT–WATER DIVISION
ISSUE DATE: MARCH 2009
REVISIONS
FIRE HYDRANT SETTING
Plate W-005

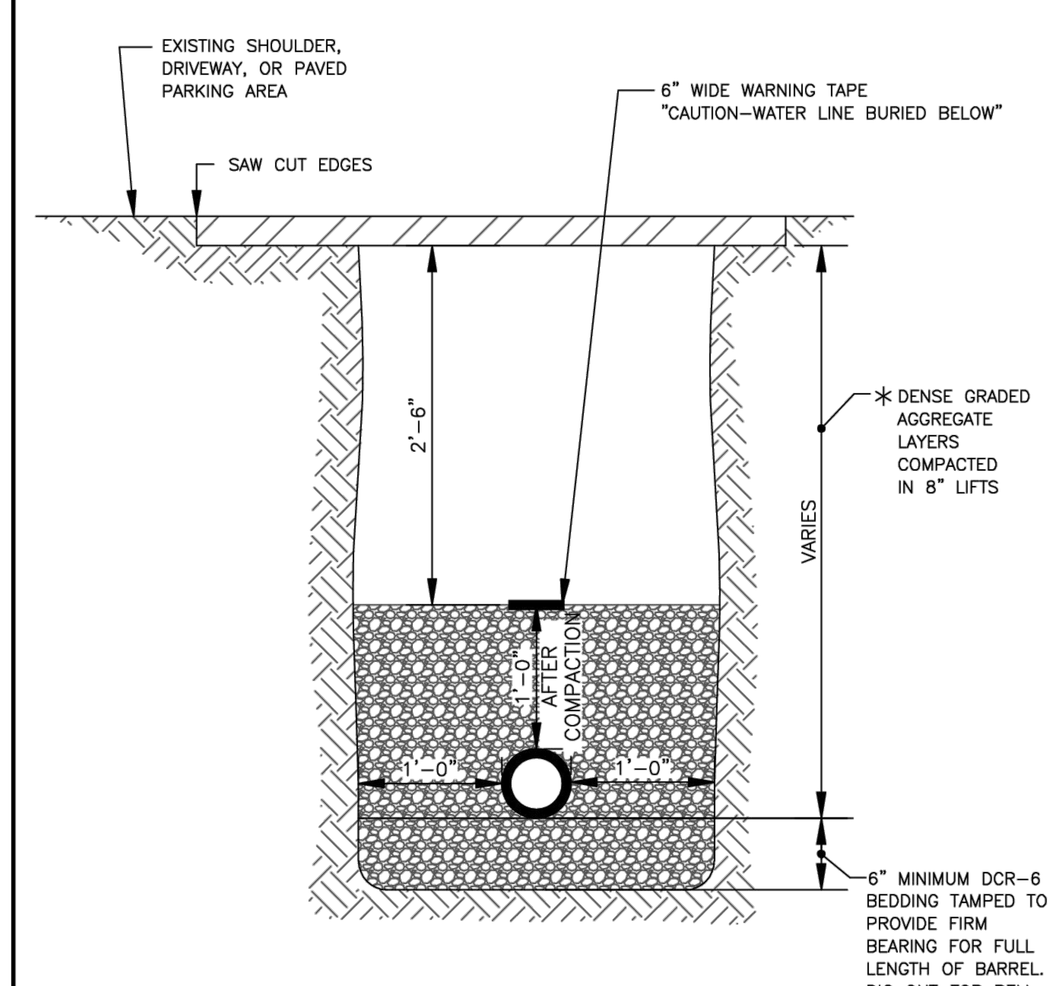

NOTES:
1. BACKFILL TO BE COMPACTED IN 8" LAYERS TO 95% OF MAXIMUM DENSITY AT OPTIMUM MOISTURE AASHTO–T–99 STANDARD PROCTOR.
2. MAINTAIN MINIMUM OF 3'-6" COVER TO TOP OF PIPE UNLESS NOTED ON PLANS OR DIRECTED BY ENGINEER.
* 3. SEE THE CITY, COUNTY OR STATE STANDARD REQUIREMENTS FOR BACKFILL.

© CITY OF HAGERSTOWN, MD, 2002

CITY OF HAGERSTOWN UTILITIES DEPARTMENT–WATER DIVISION
ISSUE DATE: MARCH 2009
REVISIONS
ROADWAY, SHOULDER AND PAVED PARKING AREA TRENCH, EXCAVATION AND BACKFILL
Plate W-001

CITY OF HAGERSTOWN UTILITIES DEPARTMENT - WATER AND WASTEWATER DIVISIONS

THIS APPROVAL IS FOR THE DESIGN AND LAYOUT OF THE PROPOSED WATER AND WASTEWATER SYSTEM IMPROVEMENTS. ALL WATER AND WASTEWATER SYSTEM IMPROVEMENTS SHALL BE CONSTRUCTED TO THE STANDARDS IN EFFECT AT THE TIME OF CONSTRUCTION. THIS APPROVAL DOES NOT GUARANTEE AVAILABILITY OF WATER OR WASTEWATER SERVICE. WATER AND WASTEWATER SERVICE IS AVAILABLE SUBJECT TO CONFORMANCE WITH ALL POLICIES AND STANDARDS IN EFFECT AT THE TIME OF APPLICATION FOR SERVICE, PAYMENT OF FEES AND APPROVAL OF THE WATER AND/OR WASTEWATER SERVICE APPLICATION. THE WATER DIVISION DOES NOT GUARANTEE A SPECIFIC WATER PRESSURE OR FLOW AT ANY METER OR FIRE HYDRANT. THIS APPROVAL IS VALID FOR A PERIOD OF ONE YEAR.

(SIGNATURE) (DATE)

HRG
HERBERT, ROWLAND & GRUBIC, INC.
5 NORTH MAIN STREET
SUITE 3
CHAMBERSBURG, PA 17201
717. 263.2070 | hrg-inc.com

SITE PLAN FOR MERITUS SCHOOL OF OSTEOPATHIC MEDICINE GRADUATE STUDENT HOUSING

1500 MT. AETNA ROAD
HAGERSTOWN, MD 21742
TAX MAP: 50 / GRID: 14 / PARCEL: 1207
HAGERSTOWN WASHINGTON COUNTY MARYLAND

PROFESSIONAL CERTIFICATION:
STATE OF MARYLAND SCOTT BERT 59144 PROFESSIONAL ENGINEER

I HEREBY CERTIFY THAT THESE DOCUMENTS WERE PREPARED OR APPROVED BY ME, AND THAT I AM DULY LICENSED PROFESSIONAL ENGINEER UNDER THE LAWS OF THE STATE OF MARYLAND. LICENSE NO. 59144, EXP. DATE: 2024-03-28

HRG PROJECT NUMBER: R003887.0427
PLAN DATE: 2023.09.01
DRAWING SCALE: AS SHOWN
PROJ. MANAGER: SBB

REVISIONS

NO.	DATE	DESCRIPTION
1	2024.01.16	PER VARIOUS REVIEW AGENCY COMMENTS
2		
3		
4		
5		
6		
7		
8		
9		

SHEET TITLE:
CONSTRUCTION DETAILS - WATER

SP-23-034

SHEET: CD-4

FILE PATH & NAME: P:\0038\003887_0427\C3D\Plan Sets\SP\L003887042TCD.dwg LAYOUT: CD-4 - WATER - SP LAST PLOTTED: 1/16/2024 9:45 AM BY: TBINGAMAN

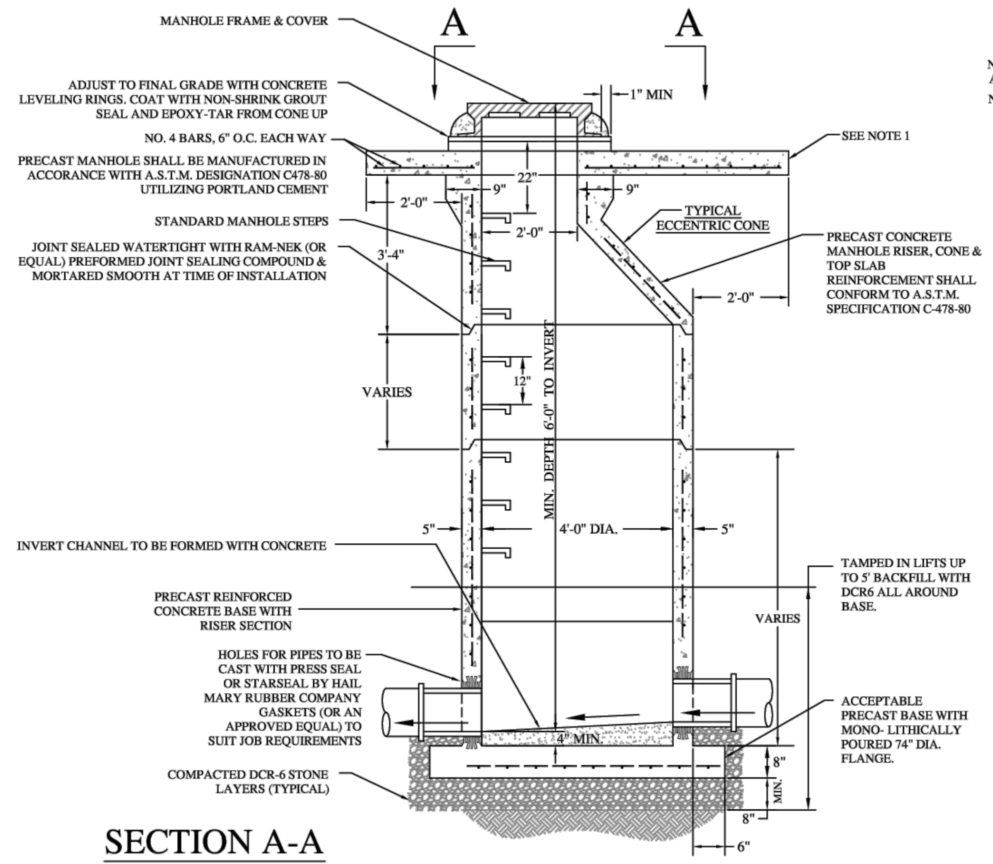

SECTION A-A

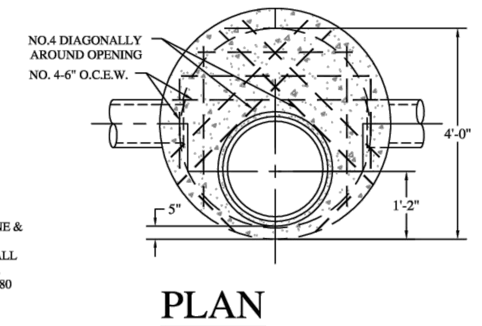

PLAN

NOTES:

1. CONCRETE ONLY IF REQUIRED BY CITY WASTEWATER DIVISION.

2. PRECAST MANHOLE SHALL BE MANUFACTURED IN ACCORDANCE WITH CONCRETE LEVELING RINGS OR BRICK TO MIN. 6"

3. TERMINAL MANHOLE SIMILAR IN ALL RESPECTS EXCEPT INFLUENT CONNECTIONS

4. COMPLETE BACKFILL OF MH\ANHOLE WITH DIRTY CRUSHER RUN DCR-6.

5. REJECT ANY MANHOLE DAMAGED OR REPAIRED.

6. THE GRADE RINGS UP TO THE FRAME AND COVER NEED TO BE PARGED WITH NON SHRINK GROUT.

CITY OF HAGERSTOWN, MARYLAND - UTILITY DEPARTMENT, WASTEWATER DIVISION

ISSUE DATE: MARCH 2009

REVISIONS

PRECAST CONCRETE MANHOLE DETAIL

DETAIL WW104

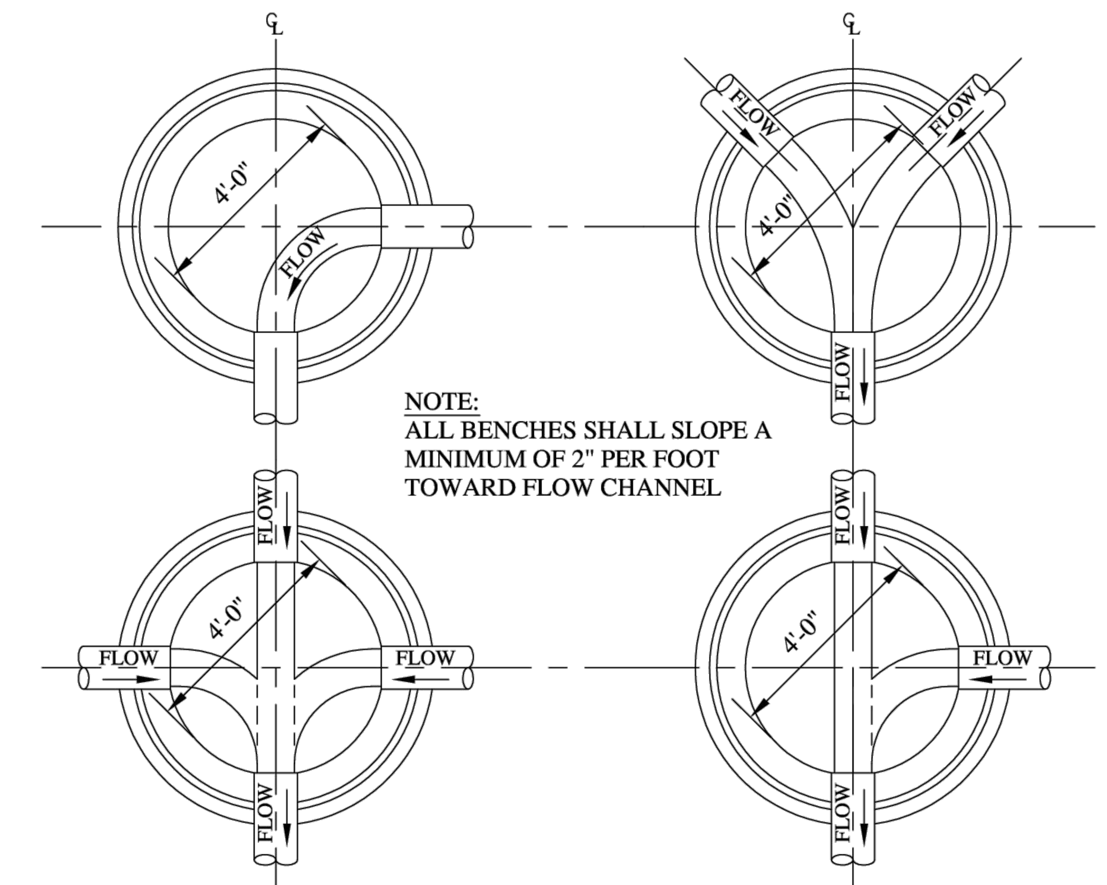

NOTE:
ALL BENCHES SHALL SLOPE A MINIMUM OF 2" PER FOOT TOWARD FLOW CHANNEL

CITY OF HAGERSTOWN, MARYLAND - UTILITIES DEPARTMENT, WASTEWATER DIVISION

ISSUE DATE: MARCH 2009

REVISIONS

PLANS OF TYPICAL MANHOLE FLOW CHANNELS

DETAIL WW109

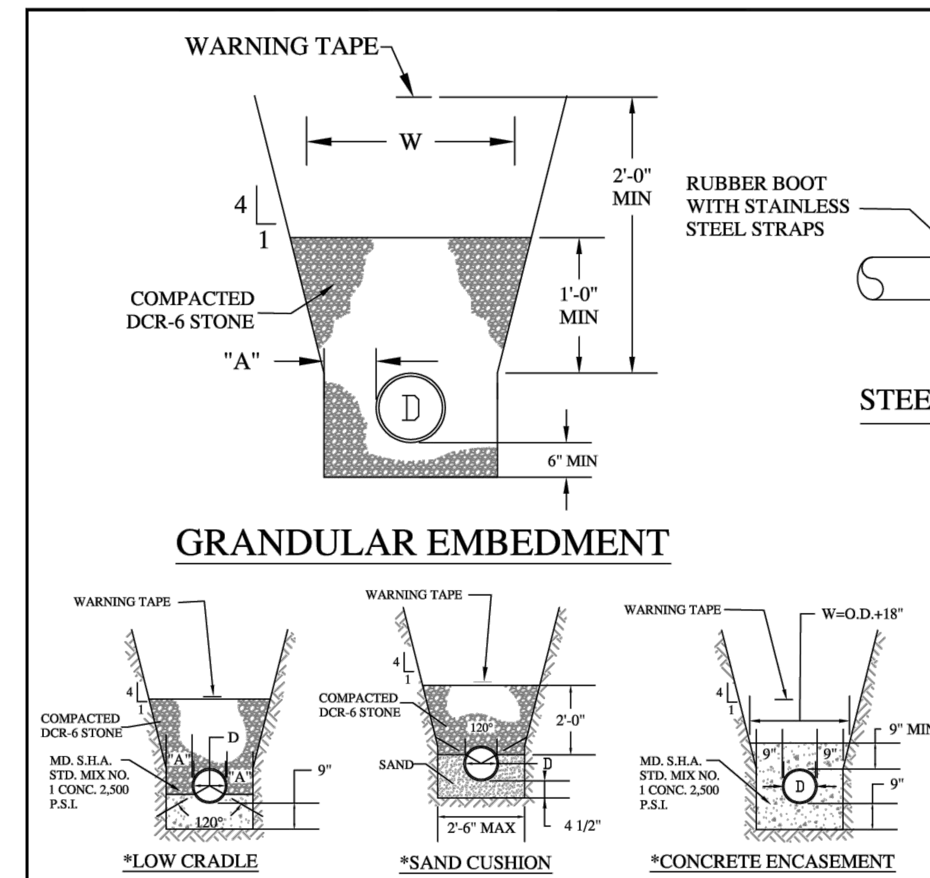

GRANDULAR EMBEDMENT

*LOW CRADLE

*SAND CUSHION

*CONCRETE ENCASEMENT

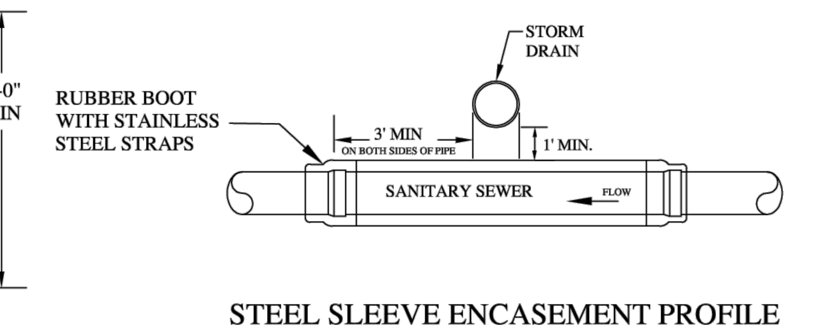

STEEL SLEEVE ENCASEMENT PROFILE

NOTES:

1. TRENCH SHALL BE BRACED WITH SHORING OR PROTECTED WITH TRENCH BOX. (OSHA APPROVED)

2. BEARING SHALL BE PROVIDED FOR FULL LENGTH OF BARREL.

3. BELL HOLES SHALL BE DUG.

4. DIMENSION "A" IS MAXIMUM ALLOWABLE CLEARANCE TO TRENCH WALL OR INSIDE FACE OF BRACING OR SHEETING. 1/2 DIA. PIPE.

5. MINIMUM "W" SHALL BE PIPE O.D. + 1'-0".

6. PAVEMENT WIDTH SHALL BE O.D. + 2 "A".

7. USE OF COMPACTED DCR-6 STONE IS REQUIRED.

8. AGGREGATE MAY BE WASHED, CRUSHER RUN GRAVEL, CRUSHED STONE OR CRUSHER RUN NO. 6.

* NOT STANDARD
NEEDS TO BE APPROVED BY ENGINEERING DIVISION.

CITY OF HAGERSTOWN, MARYLAND - UTILITIES DEPARTMENT - WASTEWATER DIVISION

ISSUE DATE: MARCH 2009

REVISIONS

TRENCHING, ENCASEMENT, AND CRADLE

DETAIL WW101

NOTES:
1. 4000 PSI TYPE II PORTLAND CEMENT (MIN).

2. ADJUST TO FINAL GRADE WITH PRECAST CONCRETE GRADE.

3. 4-1" HCLES IN GRADE RING90 DEGREES APART.

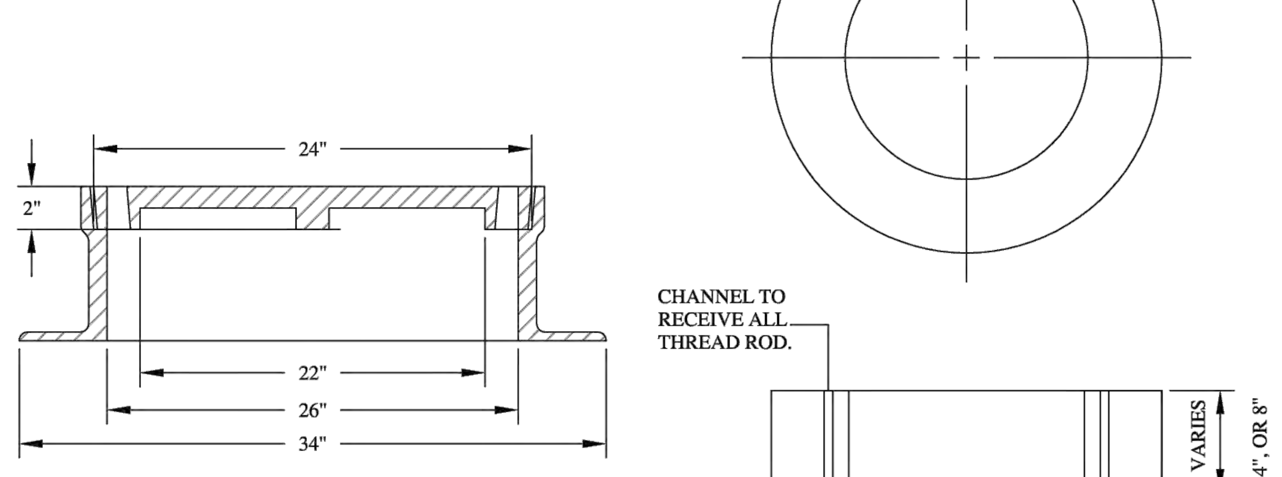

2" (INCH) THICKNESS
24" (INCH) DIAMETER
SERVICE LOAD HEAVY DUTY
SUITABLE FOR AA5H TO H20/HS20 LOADING CONDITIONS

CITY OF HAGERSTOWN, MARYLAND - UTILITIES DEPARTMENT - WASTEWATER DIVISION

ISSUE DATE: MARCH 2009

REVISIONS

MANHOLE COVER GRADE RING

DETAIL WW103

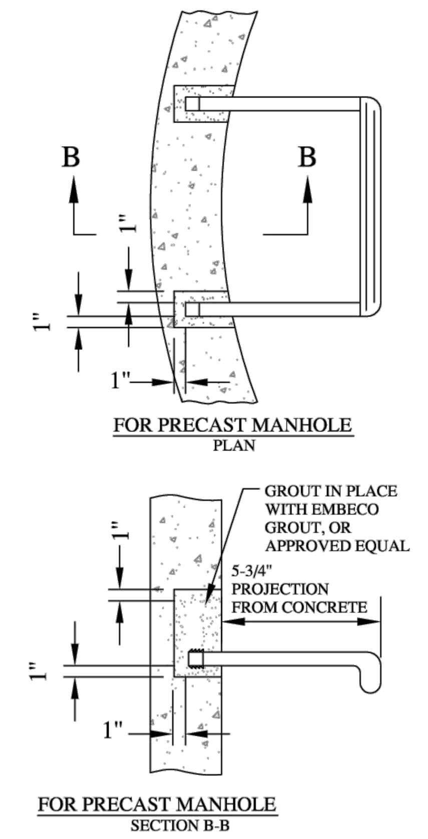

NOTES:
1. AMERICAN STEP COMPANY INC. STEPS ML10 OR APPROVED EQUAL.

2. PRECAST MANHOLE STEPS-AMERICAN STEP COMPANY INC. ML10 OR APPROVED EQUAL.

3. STEPS INSTALLED BY THE PRECAST MANHOLE MANUFACTURER MUST EQUAL #2 ABOVE.

4. 1/2" DIAMETER DEFORMED REINFORCING STEEL COPOLYMER POLYPROPYLENE OUTER LAYER.

5. POST FABRICATION 3M SCOTCH KOTE 426 (PURPLE) FUSION BONDED EPOXY COATING FOR MAXIMUM CORROSION PROTECTION.

CITY OF HAGERSTOWN, MARYLAND - UTILITIES DEPARTMENT, WASTEWATER DIVISION

ISSUE DATE: MARCH 2009

REVISIONS

MANHOLE STEPS

DETAIL WW108

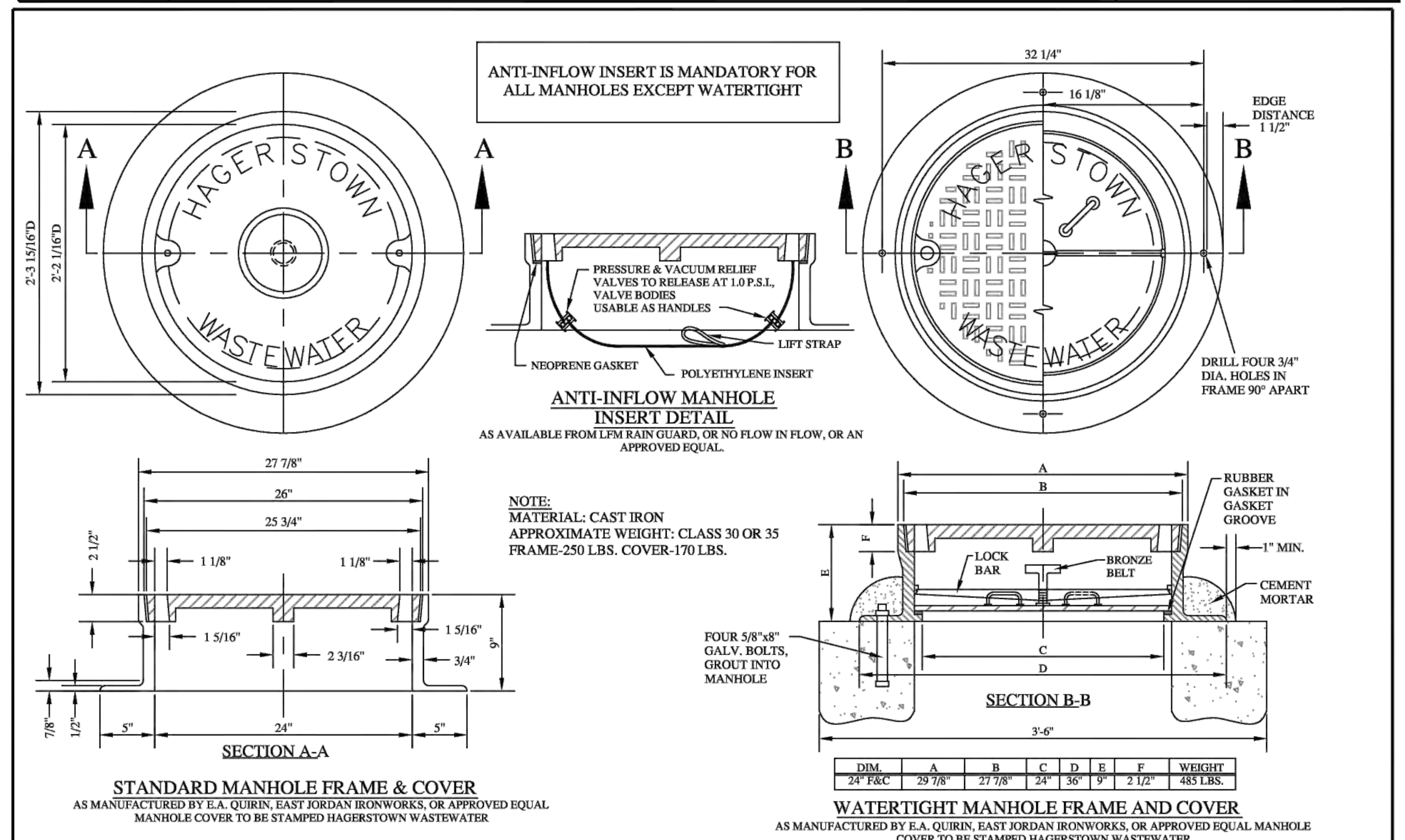

DIM.	A	B	C	D	E	F	WEIGHT
24" F&C	29 7/8"	27 7/8"	24"	36"	9"	2 1/2"	485 LBS.

CITY OF HAGERSTOWN, MARYLAND - UTILITIES DEPARTMENT - WASTEWATER DIVISION

ISSUE DATE: MARCH 2009

REVISIONS

MANHOLE FRAME AND COVER

DETAIL WW102

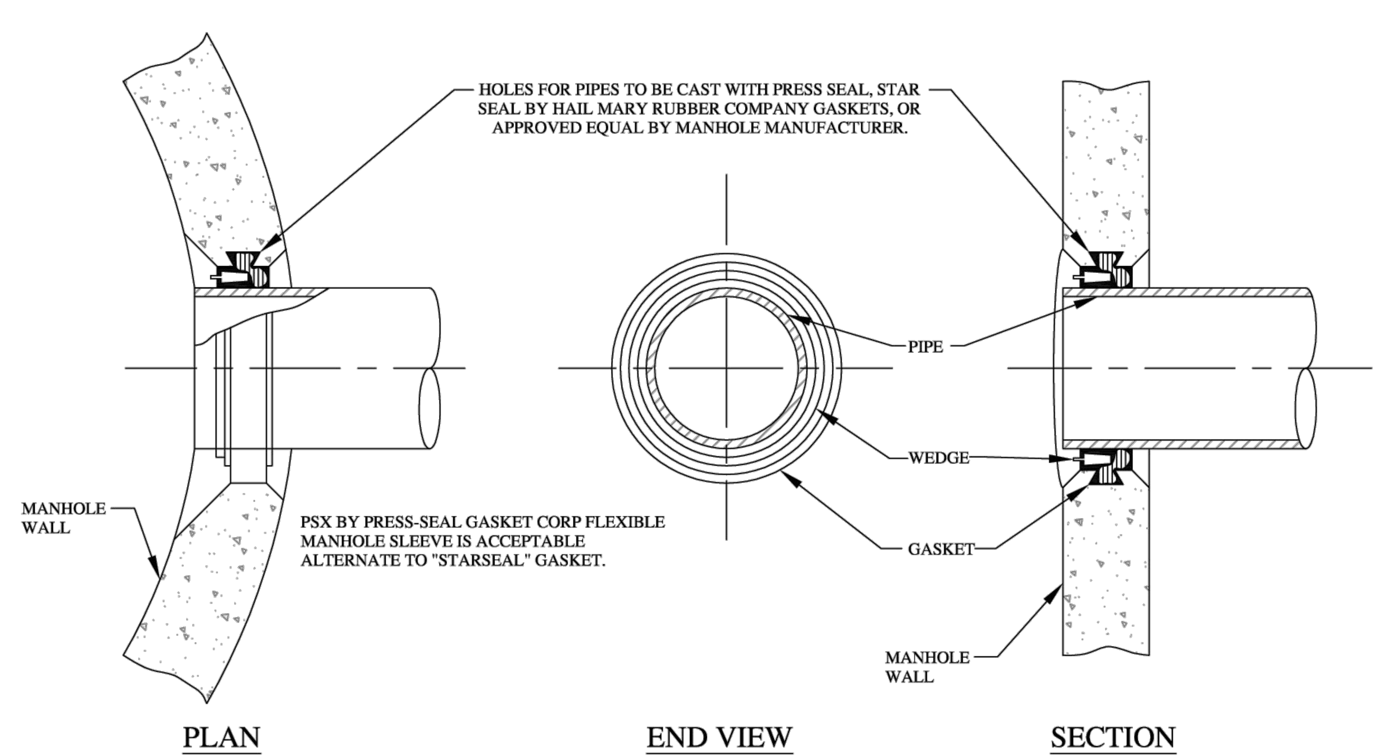

IN LIEU OF CAST-IN GASKETS, PIPES MAY BE GROUTED IN OPENINGS IN PRECAST BASE USING CONNECTION METHODS SHOWN ON DETAIL WW111 WITH APPROPRIATE SLEEVE FOR PIPE USED.

CITY OF HAGERSTOWN, MARYLAND - UTILITIES DEPARTMENT, WASTEWATER DIVISION

ISSUE DATE: MARCH 2009

REVISIONS

PRECAST MANHOLE GASKET

DETAIL WW110

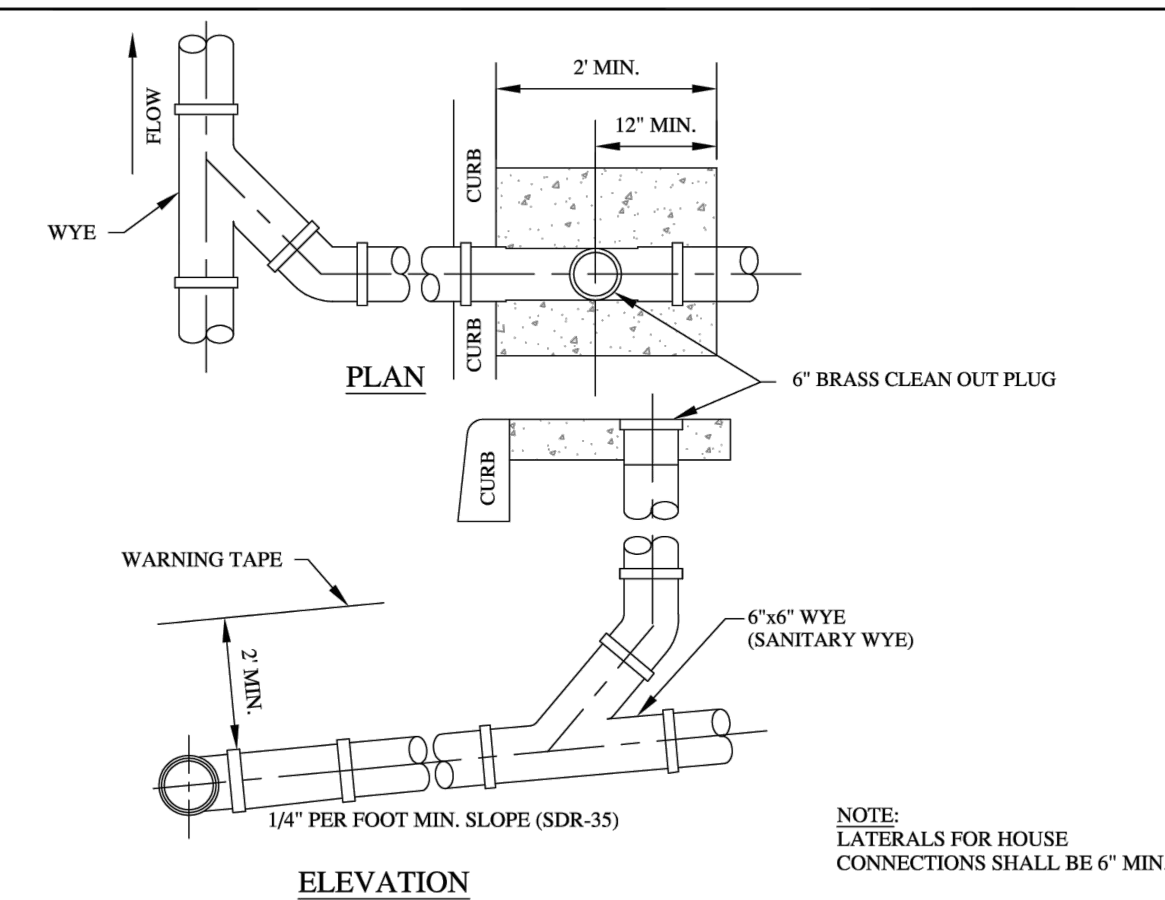

NOTE:
LATERALS FOR HOUSE CONNECTIONS SHALL BE 6" MIN.

CITY OF HAGERSTOWN, MARYLAND - UTILITIES DEPARTMENT, WASTEWATER DIVISION

ISSUE DATE: MARCH 2009

REVISIONS

SINGLE SEWER HOUSE CONNECTION

DETAIL WW113

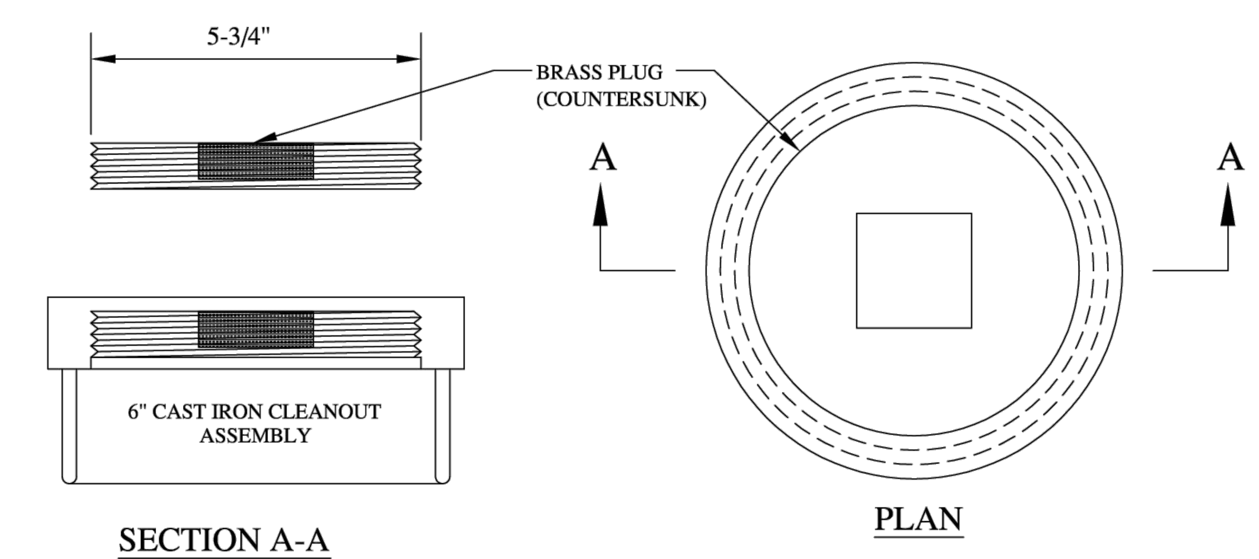

NOTES:
1. FOR DRIVEWAY, ROADWAY, GRASS STRIP, OR SIDEWALK LOCATIONS, A H-20 TRAFFIC LOADING COVER ASSEMBLY SHALL BE UTILIZED.

2. MEETS ASTM A74-98 AND ASME A112.36
CUT PIPE TO DESIRED LEVEL, LUBE GASKET AND PUSH ON PIPE, TAP WITH LEAD HAMMER TO SEAT, THEN INSTALL BRASS PLUG.

CITY OF HAGERSTOWN, MARYLAND - UTILITIES DEPARTMENT, WASTEWATER DIVISION

ISSUE DATE: MARCH 2009

REVISIONS

CLEANOUT DETAIL

DETAIL WW116

CITY OF HAGERSTOWN UTILITIES DEPARTMENT - WATER AND WASTEWATER DIVISIONS

THIS APPROVAL IS FOR THE DESIGN AND LAYOUT OF THE PROPOSED WATER AND WASTEWATER SYSTEM IMPROVEMENTS. ALL WATER AND WASTEWATER SYSTEM IMPROVEMENTS SHALL BE CONSTRUCTED TO THE STANDARDS IN EFFECT AT THE TIME OF CONSTRUCTION. THIS APPROVAL DOES NOT GUARANTEE AVAILABILITY OF WATER OR WASTEWATER SERVICE. WATER AND WASTEWATER SERVICE IS AVAILABLE SUBJECT TO CONFORMANCE WITH ALL POLICIES AND STANDARDS IN EFFECT AT THE TIME OF APPLICATION FOR SERVICE, PAYMENT OF FEES AND APPROVAL OF THE WATER AND/OR WASTEWATER SERVICE APPLICATION. THE WATER DIVISION DOES NOT GUARANTEE A SPECIFIC WATER PRESSURE OR FLOW AT ANY METER OR FIRE HYDRANT. THIS APPROVAL IS VALID FOR A PERIOD OF ONE YEAR.

(SIGNATURE) (DATE)

HRG
HERBERT, ROWLAND & GRUBIC, INC.
5 NORTH MAIN STREET
SUITE 3
CHAMBERSBURG, PA 17201
717. 263.2070 | hrg-inc.com

SITE PLAN FOR MERITUS SCHOOL OF OSTEOPATHIC MEDICINE GRADUATE STUDENT HOUSING

1500 MT. AETNA ROAD
HAGERSTOWN, MD 21742
TAX MAP: 50 / GRID: 14 / PARCEL: 1207
HAGERSTOWN WASHINGTON COUNTY MARYLAND

PROFESSIONAL CERTIFICATION:

STATE OF MARYLAND SCOTT BERT PROFESSIONAL ENGINEER 59144

I HEREBY CERTIFY THAT THESE DOCUMENTS WERE PREPARED OR APPROVED BY ME, AND THAT I AM DULY LICENSED PROFESSIONAL ENGINEER UNDER THE LAWS OF THE STATE OF MARYLAND. LICENSE NO. 59144, EXP. DATE: 2024-03-28

HRG PROJECT NUMBER:	R003887.0427
PLAN DATE:	2023.09.01
DRAWING SCALE:	AS SHOWN
PROJ. MANAGER:	SBB

REVISIONS

NO.	DATE	DESCRIPTION
1	2024.01.16	PER VARIOUS REVIEW AGENCY COMMENTS
2		
3		
4		
5		
6		
7		
8		
9		

SHEET TITLE:
CONSTRUCTION DETAILS - SEWER

SP-23-034

SHEET: CD-5 47 OF 81

FILE PATH & NAME: P:\0038\003887_0427\C3D\Plan Sets\SP\L003887.0427C0.dwg LAYOUT: CD-5 - SEWER - SP LAST PLOTTED: 1/15/2024 4:34 PM BY: TBINGAMAN

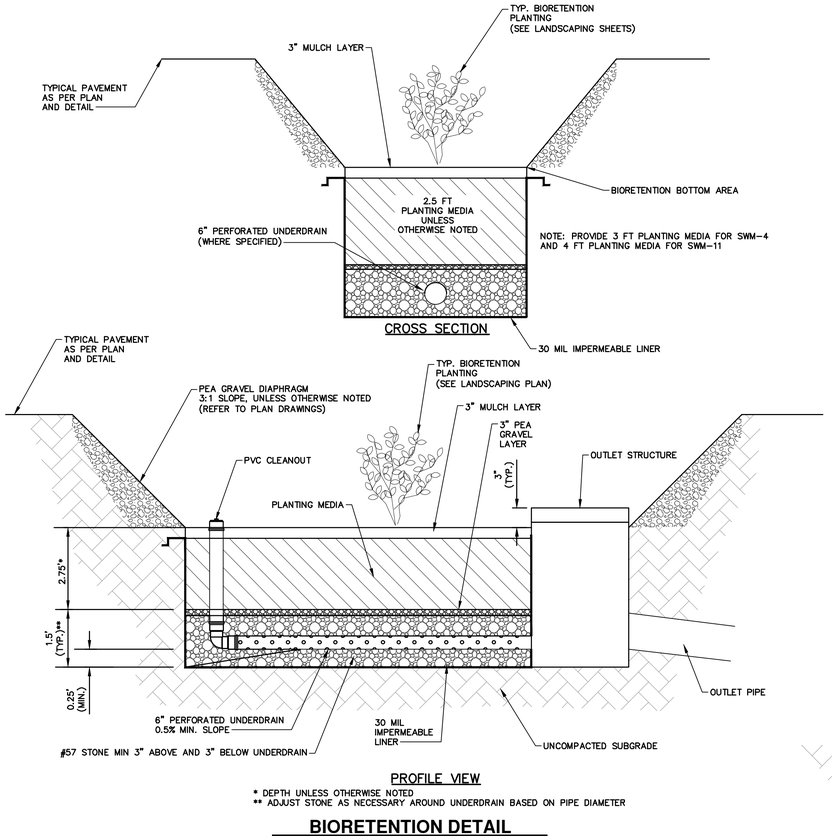

BIORETENTION DETAIL

NOT TO SCALE

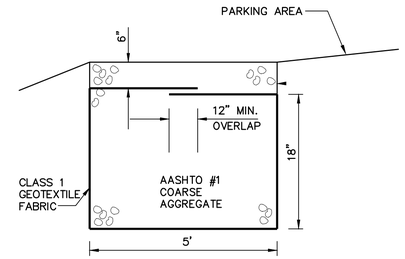

GRAVEL DIAPHRAGM DETAIL - TYP.

NOT TO SCALE

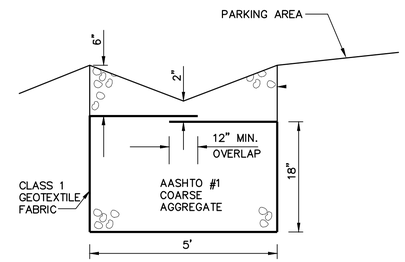

CROSS-SECTION

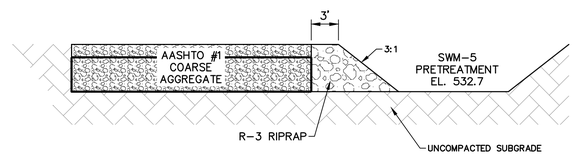

LONGITUDINAL-SECTION

GRAVEL DIAPHRAGM DETAIL - SWM-5

NOT TO SCALE

TABLE B.3.2 MATERIALS SPECIFICATIONS FOR BIORETENTION

Material	Specification	Size	Notes
Plantings	SEE PLANTING PLAN	n/a	plantings are site-specific
planting soil [2.5' to 4' deep]	sand 35 - 60% silt 30 - 55% clay 10 - 25%	n/a	USDA soil types loamy sand, sandy loam or loam
mulch	shredded hardwood		aged 6 months, minimum
pea gravel diaphragm and curtain drain	pea gravel: ASTM-D-448 ornamental stone: washed cobbles	pea gravel: No. 6 stone: 2" to 5"	
geotextile N/A	Class "C" - apparent opening size (ASTM-D-4751), grab tensile strength (ASTM-D-4632), puncture resistance (ASTM-D-4833)	n/a	for use as necessary beneath underdrains only
underdrain gravel	AASHTO M-43	0.375" to 0.75"	
underdrain piping	F 758, Type PS 28 or AASHTO M-278	4" to 6" rigid schedule 40 PVC or SDR35	3/8" perf. @ 6" on center, 4 holes per row; minimum of 3" of gravel over pipes; not necessary underneath pipes
poured in place concrete (if required)	MSHA Mix No. 3; f'_c = 3500 psi @ 28 days, normal weight, air-entrained; reinforcing to meet ASTM-615-60	n/a	on-site testing of poured-in-place concrete required: 28 day strength and slump test; all concrete design (cast-in-place or pre-cast) *not using previously approved State or local standards* requires design drawings sealed and approved by a professional structural engineer licensed in the State of Maryland - design to include meeting ACI Code 350.R/89; vertical loading [H-10 or H-20]; allowable horizontal loading (based on soil pressures); and analysis of potential cracking
sand N/A [1' deep]	AASHTO-M-6 or ASTM-C-33	0.02" to 0.04"	Sand substitutions such as Diabase and Graystone #10 are not acceptable. No calcium carbonated or dolomitic sand substitutions are acceptable. No "rock dust" can be used for sand.

NOTES:

1. REFER TO DETAIL LANDSCAPE SHEETS FOR PLANTING SPECIES AND CHART.
2. DUE TO KARST GEOLOGY, PROVIDE 30-MIL IMPERMEABLE LINER BENEATH ALL BIORETENTION AREAS.

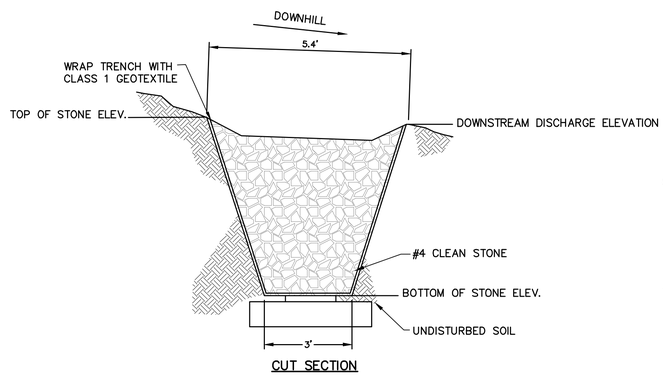

CUT SECTION

LEVEL SPREADER	LENGTH (FT.)	BOTTOM OF STONE ELEVATION (FT.)	TOP OF STONE ELEVATION (FT.)	DISCHARGE WEIR ELEVATION
SWM-6	190	537.60	540.40	540.20

STONE FILLED TRENCH LEVEL SPREADER OUTFALL DETAIL

NOT TO SCALE

SPECIFICATIONS FOR BIORETENTION

1. MATERIAL SPECIFICATIONS
   THE ALLOWABLE MATERIALS TO BE USED IN BIORETENTION AREA ARE DETAILED IN TABLE B.3.2.

2. PLANTING SOIL
   THE SOIL SHALL BE A UNIFORM MIX, FREE OF STONES, STUMPS, ROOTS OR OTHER SIMILAR OBJECTS LARGER THAN TWO INCHES. NO OTHER MATERIALS OR SUBSTANCES SHALL BE MIXED OR DUMPED WITHIN THE BIORETENTION AREA THAT MAY BE HARMFUL TO PLANT GROWTH, OR PROVE A HINDRANCE TO THE PLANTING OR MAINTENANCE OPERATIONS. THE PLANTING SOIL SHALL BE FREE OF BERMUDA GRASS, QUACKGRASS, JOHNSON GRASS, OR OTHER NOXIOUS WEEDS AS SPECIFIED UNDER COMAR 15.08.01.05.

   THE PLANTING SOIL SHALL BE TESTED AND SHALL MEET THE FOLLOWING CRITERIA:

PH RANGE	5.2 – 7.0
ORGANIC MATTER	1.5 – 4% (BY WEIGHT)
MAGNESIUM	35 LB./AC
PHOSPHORUS (PHOSPHATE – P_2O_5)	75 LB./AC
POTASSIUM (POTASH – K_2O)	85 LB./AC
SOLUBLE SALTS	NOT TO EXCEED 500 PPM

   ALL BIORETENTION AREAS SHALL HAVE A MINIMUM OF ONE TEST. EACH TEST SHALL CONSIST OF BOTH THE STANDARD SOIL TEST FOR PH, PHOSPHORUS, AND POTASSIUM AND ADDITIONAL TESTS OF ORGANIC MATTER, AND SOLUBLE SALTS. A TEXTURAL ANALYSIS IS REQUIRED FROM THE SITE STOCKPILED TOPSOIL. IF TOPSOIL IS IMPORTED, THEN A TEXTURE ANALYSIS SHALL BE PERFORMED FOR EACH LOCATION WHERE THE TOP SOIL WAS EXCAVATED.

   SINCE DIFFERENT LABS CALIBRATE THEIR TESTING EQUIPMENT DIFFERENTLY, ALL TESTING RESULTS SHALL COME FROM THE SAME TESTING FACILITY.

   SHOULD THE PH FALL OUT OF THE ACCEPTABLE RANGE, IT MAY BE MODIFIED (HIGHER) WITH LIME OR (LOWER) WITH IRON SULFATE PLUS SULFUR.

3. COMPACTION
   IT IS VERY IMPORTANT TO MINIMIZE COMPACTION OF BOTH THE BASE OF THE BIORETENTION AREA AND THE REQUIRED BACKFILL. WHEN POSSIBLE, USE EXCAVATION HOES TO REMOVE ORIGINAL SOIL. IF BIORETENTION AREAS ARE EXCAVATED USING A LOADER, THE CONTRACTOR SHOULD USE WIDE TRACK OR MARSH TRACK EQUIPMENT, OR LIGHT EQUIPMENT WITH TURF TYPE TIRES. USE OF EQUIPMENT WITH NARROW TRACKS OR NARROW TIRES, RUBBER TIRES WITH LARGE LUGS, OR HIGH PRESSURE TIRES WILL CAUSE EXCESSIVE COMPACTION RESULTING IN REDUCED INFILTRATION RATES AND IS NOT ACCEPTABLE. COMPACTION WILL SIGNIFICANTLY CONTRIBUTE TO DESIGN FAILURE.

   COMPACTION CAN BE ALLEVIATED AT THE BASE OF THE BIORETENTION FACILITY BY USING A PRIMARY TILLING OPERATION SUCH AS A CHISEL PLOW, RIPPER, OR SUBSOILER. THESE TILLING OPERATIONS ARE TO REFRACTURE THE SOIL PROFILE THROUGH THE 12 INCH COMPACTION ZONE. SUBSTITUTE METHODS MUST BE APPROVED BY THE ENGINEER. ROTOTILLERS TYPICALLY DO NOT TILL DEEP ENOUGH TO REDUCE THE EFFECTS OF COMPACTION FROM HEAVY EQUIPMENT.

   ROTOTILL 2 TO 3 INCHES OF SAND INTO THE BASE OF THE BIORETENTION FACILITY BEFORE BACKFILLING THE OPTIONAL SAND LAYER. PUMP ANY PONDED WATER BEFORE PREPARING (ROTOTILLING) BASE.

   WHEN BACKFILLING THE TOPSOIL OVER THE SAND LAYER, FIRST PLACE 3 TO 4 INCHES OF TOPSOIL OVER THE SAND, THEN ROTOTILL THE SAND/TOPSOIL TO CREATE A GRADATION ZONE. BACKFILL THE REMAINDER OF THE TOPSOIL TO FINAL GRADE.

   WHEN BACKFILLING THE BIORETENTION FACILITY, PLACE SOIL IN LIFTS 12" TO 18". DO NOT USE HEAVY EQUIPMENT WITHIN THE BIORETENTION BASIN. HEAVY EQUIPMENT CAN BE USED AROUND THE PERIMETER OF THE BASIN TO SUPPLY SOILS AND SAND. GRADE BIORETENTION MATERIALS WITH LIGHT EQUIPMENT SUCH AS A COMPACT LOADER OR A DOZER/LOADER WITH MARSH TRACKS.

4. PLANT MATERIAL
   RECOMMENDED PLANT MATERIAL FOR BIORETENTION AREAS CAN BE FOUND IN APPENDIX A, SECTION A.2.3.

5. PLANT INSTALLATION
   MULCH SHOULD BE PLACED TO A UNIFORM THICKNESS OF 2" TO 3". SHREDDED HARDWOOD MULCH IS THE ONLY ACCEPTED MULCH. PINE MULCH AND WOOD CHIPS WILL FLOAT AND MOVE TO THE PERIMETER OF THE BIORETENTION AREA DURING A STORM EVENT AND ARE NOT ACCEPTABLE. SHREDDED MULCH MUST BE WELL AGED (6 TO 12 MONTHS) FOR ACCEPTANCE.

   ROOT STOCK OF THE PLANT MATERIAL SHALL BE KEPT MOIST DURING TRANSPORT AND ON-SITE STORAGE. THE PLANT ROOT BALL SHOULD BE PLANTED SO 1/8TH OF THE BALL IS ABOVE FINAL GRADE SURFACE. THE DIAMETER OF THE PLANTING PIT SHALL BE AT LEAST SIX INCHES LARGER THAN THE DIAMETER OF THE PLANTING BALL. SET AND MAINTAIN THE PLANT STRAIGHT DURING THE ENTIRE PLANTING PROCESS. THOROUGHLY WATER GROUND BED COVER AFTER INSTALLATION.

   TREES SHALL BE BRACED USING 2" BY 2" STAKES ONLY AS NECESSARY AND FOR THE FIRST GROWING SEASON ONLY. STAKES ARE TO BE EQUALLY SPACED ON THE OUTSIDE OF THE TREE BALL.

   GRASSES AND LEGUME SEED SHOULD BE DRILLED INTO THE SOIL TO A DEPTH OF AT LEAST ONE INCH. GRASS AND LEGUME PLUGS SHALL BE PLANTED FOLLOWING THE NON-GRASS GROUND COVER PLANTING SPECIFICATIONS.

   THE TOPSOIL SPECIFICATIONS PROVIDE ENOUGH ORGANIC MATERIAL TO ADEQUATELY SUPPLY NUTRIENTS FROM NATURAL CYCLING. THE PRIMARY FUNCTION OF THE BIORETENTION STRUCTURE IS TO IMPROVE WATER QUALITY.

   ADDING FERTILIZERS DEFEATS, OR AT A MINIMUM, IMPEDES THIS GOAL. ONLY ADD FERTILIZER IF WOOD CHIPS OR MULCH ARE USED TO AMEND THE SOIL. ROTOTILL UREA FERTILIZER AT A RATE OF 2 POUNDS PER 1000 SQUARE FEET.

6. UNDERDRAINS
   UNDERDRAINS ARE TO BE PLACED ON A 3'-0" WIDE SECTION OF FILTER CLOTH. PIPE IS PLACED NEXT, FOLLOWED BY THE GRAVEL BEDDING. THE ENDS OF UNDERDRAIN PIPES NOT TERMINATING IN AN OBSERVATION WELL SHALL BE CAPPED.

   THE MAIN COLLECTOR PIPE FOR UNDERDRAIN SYSTEMS SHALL BE CONSTRUCTED AT A MINIMUM SLOPE OF 0.5%. OBSERVATION WELLS AND/OR CLEAN-OUT PIPES MUST BE PROVIDED (ONE MINIMUM PER EVERY 1000 SQUARE FEET OF SURFACE AREA).

7. MISCELLANEOUS
   THE BIORETENTION FACILITY MAY NOT BE CONSTRUCTED UNTIL ALL CONTRIBUTING DRAINAGE AREA HAS BEEN STABILIZED.

BIORETENTION MAINTENANCE NOTES

1. THE TOP FEW INCHES OF FILTER MEDIA SHOULD BE REMOVED AND REPLACED WHEN WATER PONDS FOR MORE THAN 48 HOURS. SILTS AND SEDIMENT SHOULD BE REMOVED FROM THE SURFACE OF THE FILTER BED WHEN ACCUMULATION EXCEEDS ONE INCH.
2. WHERE PRACTICES ARE USED TO TREAT AREAS WITH HIGHER CONCENTRATIONS OF HEAVY METALS (E.G., PARKING LOTS, ROADS), MULCH SHOULD BE REPLACED ANNUALLY. OTHERWISE, THE TOP TWO TO THREE INCHES SHOULD BE REPLACED AS NECESSARY.
3. OCCASIONAL PRUNING AND REPLACEMENT OF DEAD VEGETATION IS NECESSARY. IF SPECIFIC PLANTS ARE NOT SURVIVING, MORE APPROPRIATE SPECIES SHOULD BE USED. WATERING MAY BE REQUIRED DURING PROLONGED DRY PERIODS.

HRG
HERBERT, ROWLAND & GRUBIC, INC.
5 NORTH MAIN STREET
SUITE 3
CHAMBERSBURG, PA 17201
717. 263.2070 | hrg-inc.com

SITE PLAN
FOR
MERITUS SCHOOL OF OSTEOPATHIC MEDICINE
GRADUATE STUDENT HOUSING
1500 MT. AETNA ROAD
HAGERSTOWN, MD 21742
TAX MAP-50 | GRID: 14 | PARCEL: 1207
HAGERSTOWN WASHINGTON COUNTY MARYLAND

PROFESSIONAL CERTIFICATION:

STATE OF MARYLAND — SCOTT BERG — 59144 — PROFESSIONAL ENGINEER

I HEREBY CERTIFY THAT THESE DOCUMENTS WERE PREPARED OR APPROVED BY ME, AND THAT I AM DULY LICENSED PROFESSIONAL ENGINEER UNDER THE LAWS OF THE STATE OF MARYLAND. LICENSE NO. 59144, EXP. DATE: 2024-03-28

HRG PROJECT NUMBER:	R003887.0427
PLAN DATE:	2023.09.01
DRAWING SCALE:	AS SHOWN
PROJ. MANAGER:	SBB

REVISIONS

NO.	DATE	DESCRIPTION
1	2024.01.16	PER VARIOUS REVIEW AGENCY COMMENTS
2		
3		
4		
5		
6		
7		
8		
9		

SHEET TITLE:
STORMWATER NOTES & DETAILS

SP-23-034

SHEET: CD-6

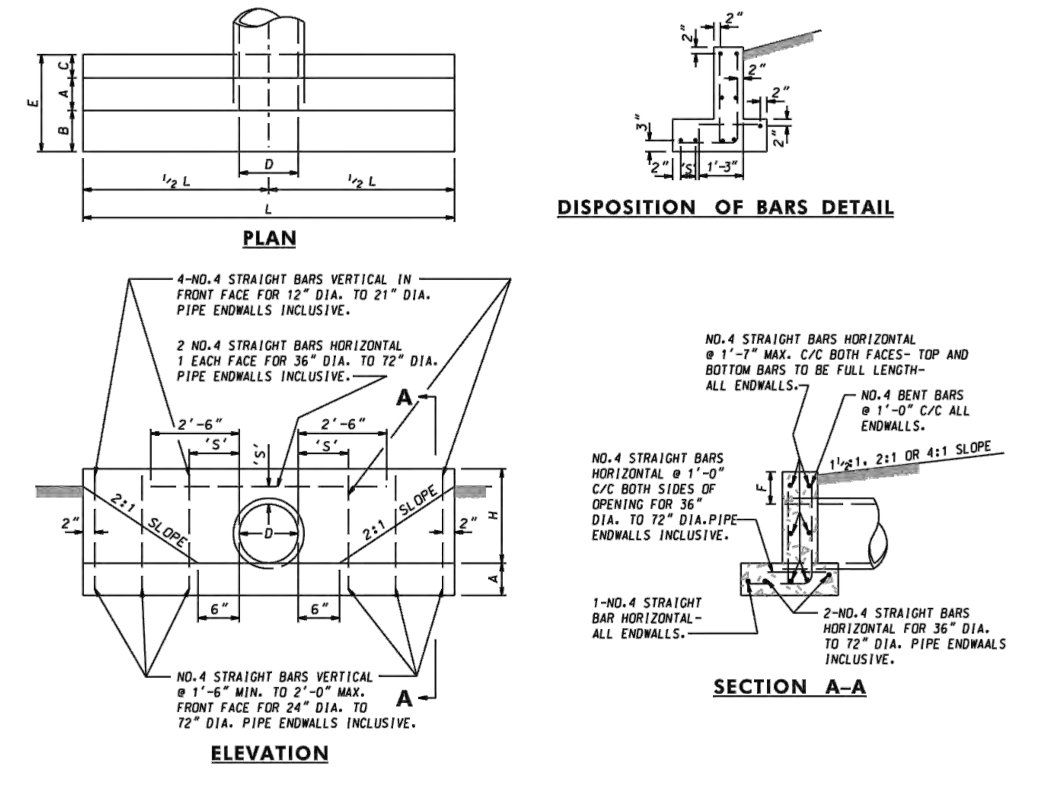

QUANTITIES FOR ESTIMATING PURPOSES ONLY

OPENING		DIMENSIONS							QUANTITIES	
D INCHES	AREA SQ.FT.	A	B	C	E	F	H	L	CONC. C.Y.	STEEL LBS.
12	0.79	9"	6"	6"	1'-9"	9"	1'-9"	6'-6"	0.61	41
15	1.23	9"	6"	6"	1'-9"	9"	2'-0"	7'-9"	0.77	47
18	1.77	9"	6"	6"	1'-9"	9"	2'-3"	9'-0"	0.95	54
21	2.40	9"	6"	6"	1'-9"	9"	2'-6"	10'-3"	1.14	70
24	3.14	9"	14"	6"	2'-5"	9"	2'-9"	11'-6"	1.56	80
27	3.98	9"	14"	6"	2'-5"	9"	3'-0"	12'-10"	1.82	88
30	4.91	9"	14"	6"	2'-5"	12"	3'-6"	14'-2"	2.22	98
33	5.94	9"	14"	6"	2'-5"	12"	3'-9"	15'-5"	2.48	105
36	7.07	12"	16"	10"	3'-2"	12"	4'-0"	16'-8"	4.16	182
42	9.62	12"	16"	10"	3'-2"	12"	4'-6"	19'-2"	5.07	206
48	12.57	12"	16"	10"	3'-2"	12"	5'-0"	21'-8"	6.09	244
54	15.90	12"	20"	12"	3'-8"	12"	5'-6"	24'-2"	7.62	275
60	19.64	12"	20"	12"	3'-8"	12"	6'-0"	26'-8"	8.82	304
72	28.27	12"	20"	12"	3'-8"	12"	7'-0"	31'-8"	11.46	377

'S' DISTANCES

4" FOR 12" DIA. TO 21" DIA. PIPES INCLUSIVE.
6" FOR 24" DIA. TO 36" DIA. PIPES INCUSIVE.
8" FOR 42" DIA. TO 72" DIA. PIPES INCLUSIVE.

GENERAL NOTES

SPECIFICATIONS: LATEST S.H.A.
CONCRETE SHALL BE MIX NO.2
REINFORCING: DEFORMED STEEL BARS-NO.4
CHAMFER: ALL EXPOSED EDGES 1"x1" OR AS DIRECTED

SPECIFICATION 305 | CATEGORY CODE ITEMS
APPROVED — DIRECTOR – OFFICE OF HIGHWAY DEVELOPMENT
APPROVAL • SHA REVISIONS: APPROVAL 8-28-86; REVISED 10-1-01; REVISED; REVISED
APPROVAL • FEDERAL HIGHWAY ADMINISTRATION: APPROVAL 12-12-86; REVISED; REVISED; REVISED

Maryland Department of Transportation
STATE HIGHWAY ADMINISTRATION
STANDARDS FOR HIGHWAYS AND INCIDENTAL STRUCTURES
STANDARD TYPE C ENDWALL METAL OR CONCRETE ROUND PIPE
STANDARD NO. MD 354.01

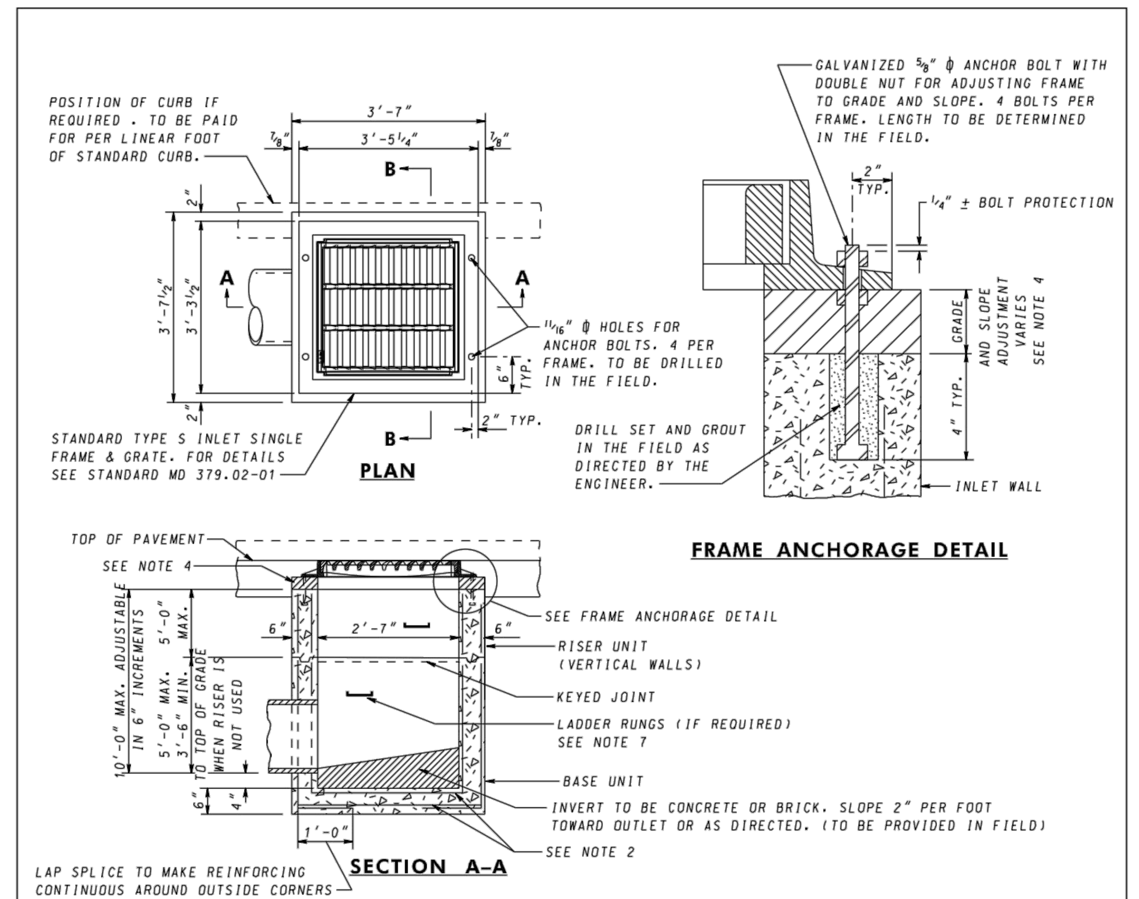

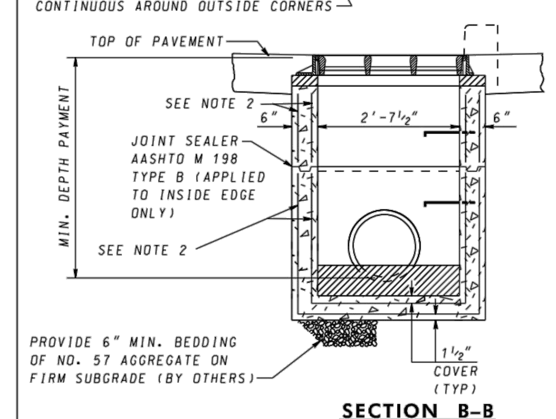

GENERAL NOTES

1. CONCRETE TO BE MIX NO.6 (4500 PSI).
2. REINFORCING WALLS -2 LAYERS OF 4x4-W4.0x W4.0 WELDED WIRE FABRIC; BASE - 2 LAYERS OF 4X4 - W5.0 X W5.0 WELDED WIRE FABRIC
3. THREADED PLASTIC INSERTS TO BE PROVIDED FOR HANDLING.
4. GRADE AND SLOPE ADJUSTMENTS TO BE COMPLETED IN THE FIELD USING CONCRETE MIX NO.6.
5. PIPE OPENINGS TO BE PROVIDED AS REQUIRED. FOR SIZE, LOCATION AND INVERT ELEVATIONS REFER TO CONSTRUCTION PLANS.
6. PLACEMENT OF SUBGRADE DRAINAGE WILL BE AS DIRECTED BY THE ENGINEER OR AS NOTED ON THE CONSTRUCTION PLANS.
7. LADDER RUNGS SHALL BE IN ACCORDANCE WITH STANDARD MD 383.91 AND MD 383.92 OR AS DIRECTED BY THE ENGINEER.
8. MINIMUM DEPTH PAYMENT PER "EACH" INLET INCLUDES DEPTHS UP TO 3'-6". VERTICAL DEPTH PAYMENT PER LINEAR FOOT FOR DEPTHS IN EXCESS OF 3'-6".
9. FROM CURB LINE, INLET HAS BEEN DESIGNED FOR HS-25 LOADING, ACCORDING TO AASHTO LRFD BRIDGE DESIGN SPECIFICATIONS

SPECIFICATION 305 | CATEGORY CODE ITEMS
APPROVED — DIRECTOR – OFFICE OF HIGHWAY DEVELOPMENT
APPROVAL • SHA REVISIONS: APPROVAL 4-15-87; REVISED 8-3-10; REVISED 10-7-14; REVISED –
APPROVAL • FEDERAL HIGHWAY ADMINISTRATION: APPROVAL 6-23-87; REVISED 7-26-10; REVISED 9-29-14; REVISED

Maryland Department of Transportation
STATE HIGHWAY ADMINISTRATION
STANDARDS FOR HIGHWAYS AND INCIDENTAL STRUCTURES
PRECAST STANDARD TYPE S INLET SINGLE GRATE
STANDARD NO. MD 374.73

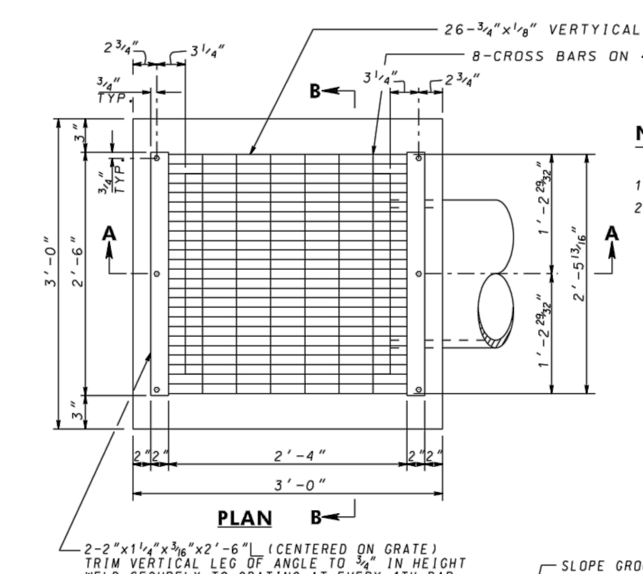

NOTES

1. GRATING TO BE GALVANIZED.
2. INLET TO BE CONSTRUCTED OF CONCRETE (MIX NO. 2) OR BRICK. WHEN INLET IS CONSRTUCTED OF CONCRETE ALL REINFORCING IS TO BE NO. 4 DEFORMED BARS 6 6" C/C.

NOTE EXPANSION ANCHORS MAY BE USED INSTEAD OF BOLTS.

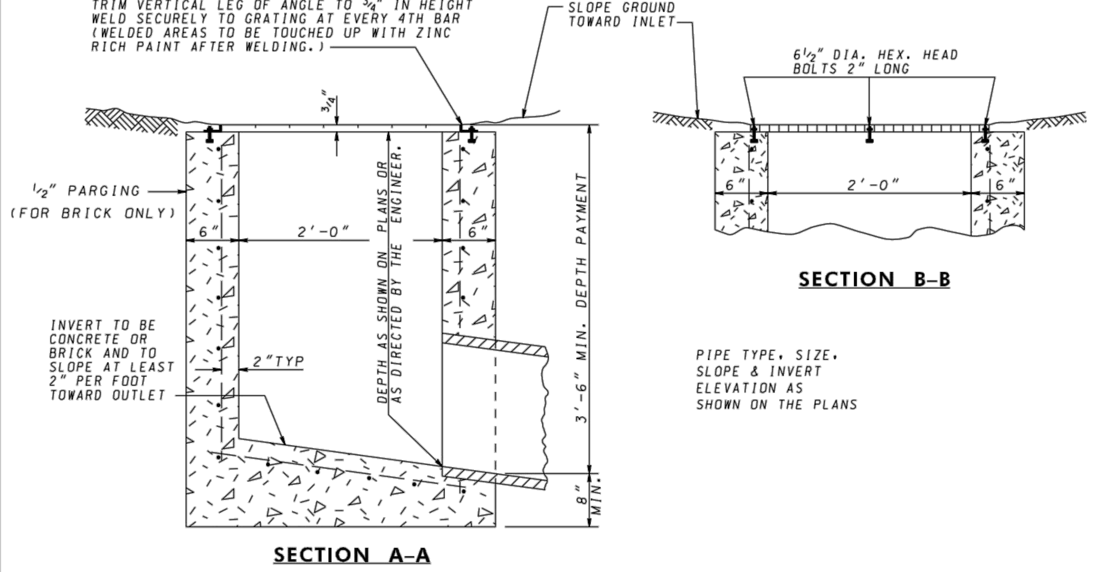

SPECIFICATION 305 | CATEGORY CODE ITEMS
APPROVED — DIRECTOR – OFFICE OF HIGHWAY DEVELOPMENT
APPROVAL • SHA REVISIONS: APPROVAL 8-7-72; REVISED 10-1-01; REVISED 10-7-14; REVISED
APPROVAL • FEDERAL HIGHWAY ADMINISTRATION: APPROVAL 8-4-72; REVISED 6-23-87; REVISED 9-29-14; REVISED

Maryland Department of Transportation
STATE HIGHWAY ADMINISTRATION
STANDARDS FOR HIGHWAYS AND INCIDENTAL STRUCTURES
STANDARD YARD INLET
STANDARD NO. MD 381.01

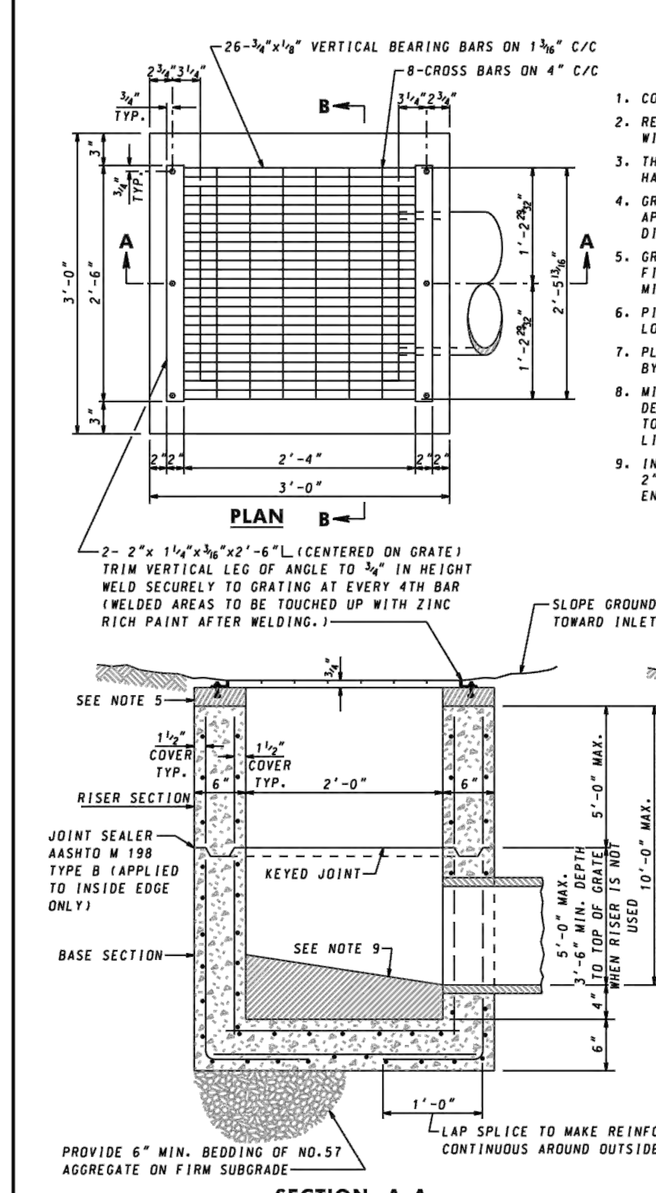

GENERAL NOTES

1. CONCRETE TO BE MIX NO.6 (4500 PSI).
2. REINFORCING-2 LAYERS OF 4x4-W4.0x W4.0 WELDED WIRE FABRIC.
3. THREADED PLASTIC INSERTS TO BE PROVIDED FOR HANDLING.
4. GRATING SHALL BE STEEL "IRVING X-BAR TYPE AA" OR APPROVED EQUIVALENT. ALL MATERIAL TO BE HOT DIPPED GALV.
5. GRADE AND SLOPE ADJUSTMENTS TO BE COMPLETED IN THE FIELD USING CONC. MIX NO.6 OR BRICK AND MORTAR. MIN. ONE LAYER OF BRICK OR 3" OF CONCRETE.
6. PIPE OPENINGS TO BE PROVIDE AS REQUIRED. FOR SIZE, LOCATION AND INVERT ELEVATIONS REFER TO PLANS.
7. PLACEMENT OF SUBGRADE DRAINAGE WILL BE AS DIRECTED BY THE ENGINEER OR AS NOTED ON THE PLANS.
8. MINIMUM DEPTH PAYMENT PER "EACH" INLET INCLUDES DEPTHS UP TO 3'-6" MEASURED FROM THE PIPE INVERT TO THE TOP OF THE GRATE. VERTICAL DEPTH PAYMENT PER LINEAR FOOT FOR DEPTHS IN EXCESS OF 3'-6".
9. INVERT TO BE CONCRETE OR BRICK AND SHALL SLOPE 2" PER FOOT TOWARD OUTLET OR AS DIRECTED BY THE ENGINEER. (INVERT PROVIDED IN THE FIELD)

NOTE EXPANSION ANCHORS MAY BE USED INSTEAD OF BOLTS.

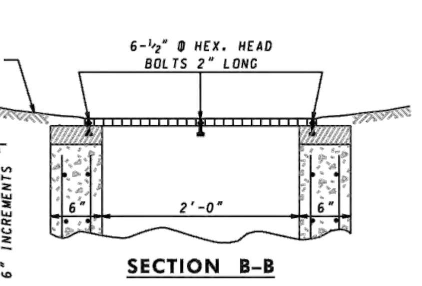

SPECIFICATION 305 | CATEGORY CODE ITEMS
APPROVED — DIRECTOR – OFFICE OF HIGHWAY DEVELOPMENT
APPROVAL • SHA REVISIONS: APPROVAL 4-5-87; REVISED 10-1-01; REVISED; REVISED
APPROVAL • FEDERAL HIGHWAY ADMINISTRATION: APPROVAL 6-23-87; REVISED; REVISED; REVISED

Maryland Department of Transportation
STATE HIGHWAY ADMINISTRATION
STANDARDS FOR HIGHWAYS AND INCIDENTAL STRUCTURES
PRECAST YARD INLET
STANDARD NO. MD 381.02

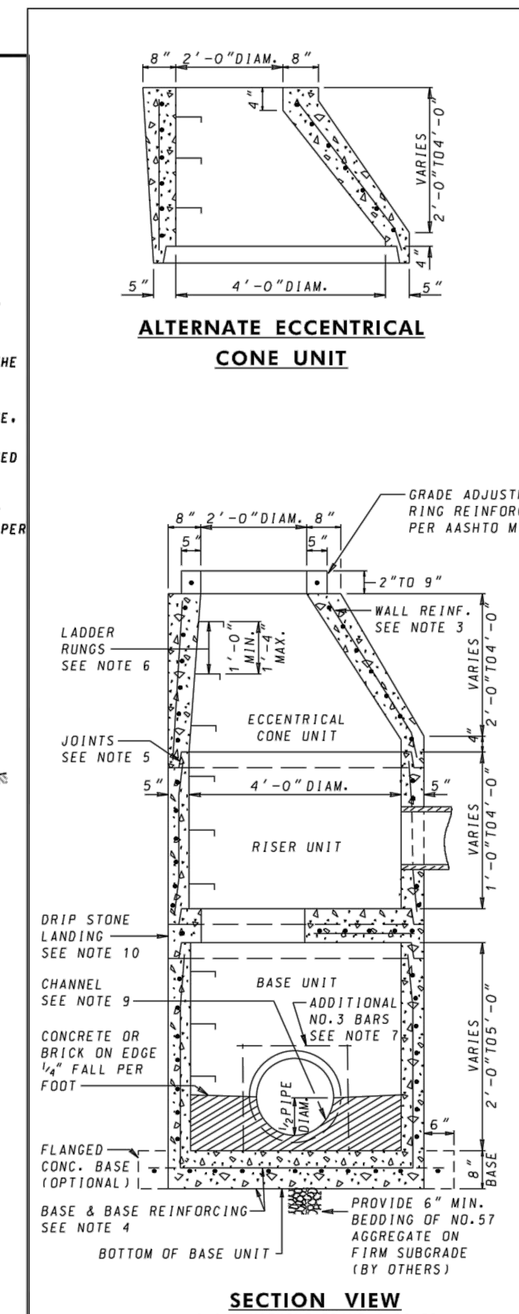

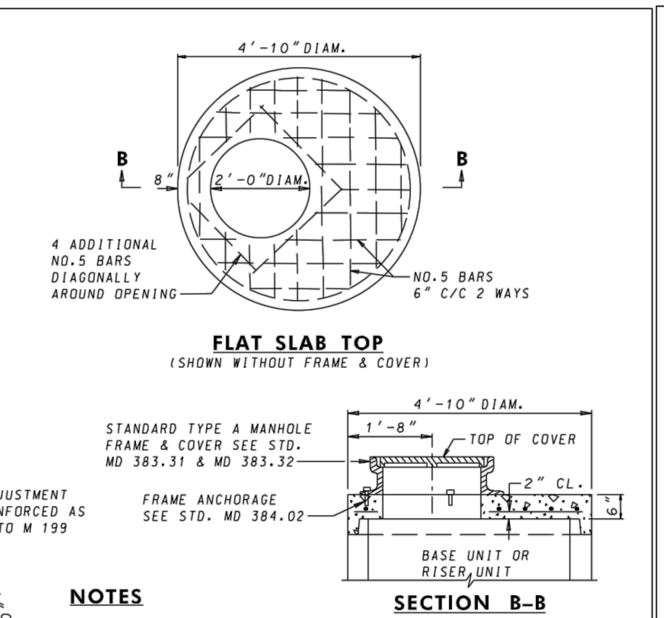

NOTES

1. MANHOLES SHALL BE CONSTRUCTED IN ACCORDANCE WITH AASHTO M 199.
2. CONCRETE SHALL BE MIX NO. 6 (4500 PSI).
3. WALL REINFORCEMENT FOR BASE UNITS, RISER UNITS AND ECCENTRICAL CONE UNITS SHALL BE REINFORCEMENT BARS OR WELDED WIRE FABRIC WITH A MINIMUM AREA OF 0.12 IN^2/FT AND MAXIMUM SPACING OF 12" FOR THE 48" DIAMETER MANHOLES. WELDED WIRE FABRIC SHALL CONFORM TO ASTM A 185 AND A 52. REINFORCEMENT SHALL MEET ASTM A 615, GRADE 60.
4. BASE REINFORCEMENT SHALL BE REINFORCEMENT BARS OR WELDED WIRE FABRIC WITH A MINIMUM AREA OF 0.20 IN^2/FT AND A MAXIMUM SPACING OF 10" WITH 2" COVER FROM THE TOP OF BASE. THE BASE SHALL BE CAST MONOLITHIC WITH THE UNIT OR JOINTED PER THE MANUFACTURER'S DESIGN.
5. THE MANUFACTURER SHALL FORM MALE AND FEMALE ENDS OF JOINTS USING THIER DESIGN. THE JOINTS SHALL BE SEALED BY THE CONTRACTOR AND MADE WATERTIGHT USING (WHERE APPLICABLE) MORTER, RUBBER O-RING GASKETS MEETING ASTM C 361 & C 443 OR FLEXIBLE PLASTIC GASKETS MEETING AASHTO M 198 TYPE B.
6. LADDER RUNGS SHALL BE INSTALLED IN VERTICAL ALIGNMENT AT 1'-4" MAXIMUM C/C. RUNG TYPES SHALL BE IN ACCORDANCE WITH STANDARDS MD 383.91 OR MD 383.92 LADDER RUNGS SHALL BE INCIDENTAL TO THE COST OF THE MANHOLE.
7. WHEN THE DISTANCE BETWEEN MULTIPLE OPENINGS IN THE BASE UNIT OR ANY RISOR UNIT IS LESS THAN 6" ADDITIONAL NO. 3 BARS ARE REQUIRED AROUND OPENINGS.
8. LIFT HOLES OR LIFT EYES SHALL BE PROVIDED IN EACH SECTION FOR HANDLING.
9. MIX NO. 2 CONCRETE OR BRICK CHANNEL SHALL BE PROVIDED IN THE FIELD AND SHALL SLOPE 2" PER FOOT TOWARD OUTLET OR AS DIRECTED BY THE ENGINEER.
10. THE DRIP STONE LANDING SHALL BE USED ONLY WHEN THERE ARE PIPES CONNECTED TO THE RISER UNITS. SEE STD. MD 384.13 FOR DETAILS.
11. MINIMUM DEPTH PAYMENT PER EACH SHALL BE 9'-0" MEASURED FROM THE BOTOM OF THE BASE UNIT TO THE TOP OF THE MANHOLE COVER VERTICAL DEPTH PAYMENT PER LINEAR FOOT SHALL INCLUDE ALL DEPTHS IN EXCESS OF 9'-0". THE COST OF THE DRIP STONE LANDING, NO. 57 AGGREGATE GROUT, SEALANT, AND ALL NECESSARY APPURTENANCES SHALL BE INCIDENTAL TO THE PRICE BID.
12. MANHOLE HAS BEEN DESIGNED FOR HS-25 LOADING, ACCORDING TO AASHTO LRFD BRIDGE DESIGN SPECIFICATIONS.

SPECIFICATION 305 | CATEGORY CODE ITEMS
APPROVED — DIRECTOR – OFFICE OF HIGHWAY DEVELOPMENT
APPROVAL • SHA REVISIONS: APPROVAL 2-22-91; REVISED 10-7-14; REVISED –; REVISED
APPROVAL • FEDERAL HIGHWAY ADMINISTRATION: APPROVAL 1-2-91; REVISED 9-29-14; REVISED; REVISED

Maryland Department of Transportation
STATE HIGHWAY ADMINISTRATION
STANDARDS FOR HIGHWAYS AND INCIDENTAL STRUCTURES
48" DIAMETER PRECAST MANHOLE FOR 12" TO 24" PIPES
STANDARD NO. MD 384.01

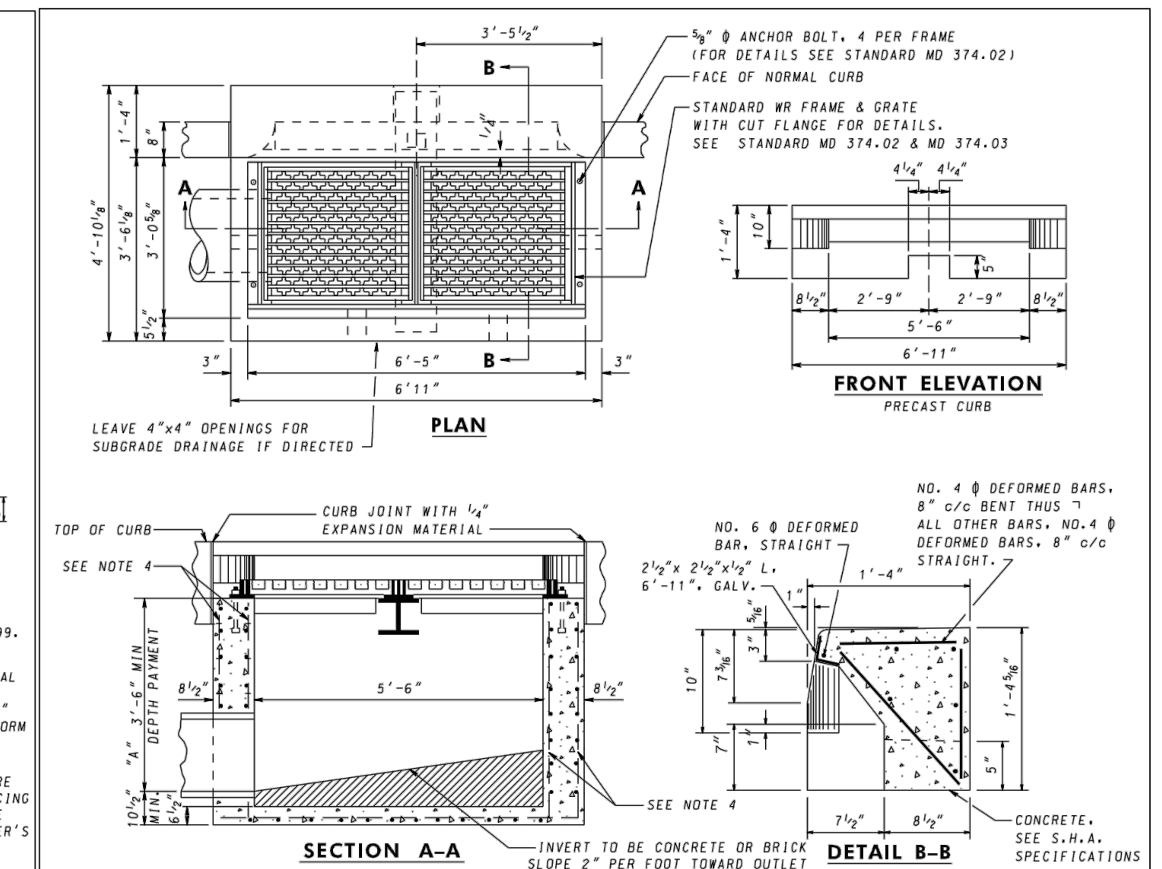

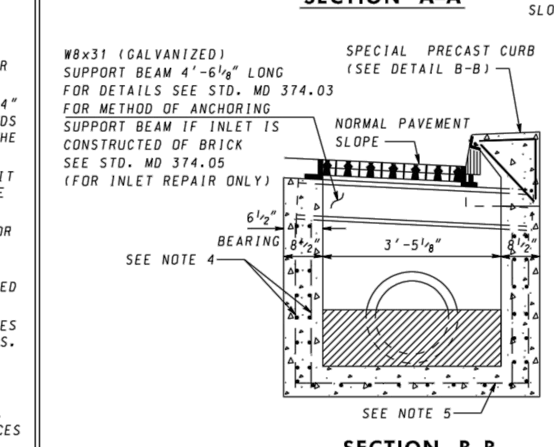

GENERAL NOTES

1. CONCRETE TO BE MIX NO. 2 (3,000 PSI).
2. SIZE, TYPE, AND DIRECTION OF INLET CONNECTION WILL VARY TO SUIT CONDITIONS.
3. SEE SHA LATEST SPECIFICATIONS FOR INLETS.
4. WHEN "A" IS LESS THAN 7'-0", WALL REINFORCEMENT SHALL BE ONE LAYER OF NO. 4 DEFORMED BARS @ 6" C/C, TWO WAYS, AND HAVE 3.5" COVER. WHEN "A" IS GREATER THAN 7'-0" AND LESS THAN THE 15'-0", WALL REINFORCEMENT TO BE TWO LAYERS OF NO. 4 DEFORMED BARS @ 6" C/C, TWO WAYS , ON INSIDE AND OUTSIDE OF WALL WITH 2" COVER.
5. BASE REINFORCEMENT SHALL BE ONE LAYER OF NO. 4 DEFORMED BARS @ 6" C/C , TWO WAYS, WITH 2" COVER FROM TOP OF BASE.
6. PLACE 1/4" EXPANSION MATERIAL OF THE SAME TYPE APPROVED FOR PAYMENT IN BETWEEN THE FRAME AND ABUTTING RIGID PAVEMENT AND BETWEEN ENDS OF INLET CURB AND NORMAL CURB.
7. BRICK FOR MASONRY TO COMPLY WITH THE SHA SPECIFICATION.
8. FOR UNDEPRESSED INLETS USE NORMAL PAVEMENT SLOPE..
9. LADDER RUNGS SHALL BE IN ACCORDANCE WITH STD MD 383.91 AND MD 383.92 OR AS DIRECTED BY THE ENGINEER.
10. FROM THE CURB LINE, INLET HAS BEEN DESIGNED FOR HS-25 LOADING ACCORDING TO AASHTO LRFD BRIDGE DESIGN SPECIFICATIONS AND TO A MAXIMUM DEPTH OF 15'-0".

SPECIFICATION 305 | CATEGORY CODE ITEMS
APPROVED — DIRECTOR – OFFICE OF HIGHWAY DEVELOPMENT
APPROVAL • SHA REVISIONS: APPROVAL 2-28-75; REVISED 10-1-01; REVISED 10-7-14; REVISED
APPROVAL • FEDERAL HIGHWAY ADMINISTRATION: APPROVAL 5-12-75; REVISED 2-24-88; REVISED 9-29-14; REVISED

Maryland Department of Transportation
STATE HIGHWAY ADMINISTRATION
STANDARDS FOR HIGHWAYS AND INCIDENTAL STRUCTURES
STANDARD WR INLET
STANDARD NO. MD 374.04

HERBERT, ROWLAND & GRUBIC, INC.
5 NORTH MAIN STREET
SUITE 3
CHAMBERSBURG, PA 17201
717. 263.2070 | hrg-inc.com

SITE PLAN FOR MERITUS SCHOOL OF OSTEOPATHIC MEDICINE GRADUATE STUDENT HOUSING
1500 MT. AETNA ROAD
HAGERSTOWN, MD 21742
TAX MAP: 50 / GRID: 14 / PARCEL: 1207
HAGERSTOWN WASHINGTON COUNTY MARYLAND

PROFESSIONAL CERTIFICATION:

I HEREBY CERTIFY THAT THESE DOCUMENTS WERE PREPARED OR APPROVED BY ME, AND THAT I AM DULY LICENSED PROFESSIONAL ENGINEER UNDER THE LAWS OF THE STATE OF MARYLAND. LICENSE NO. 59144, EXP. DATE: 2024-03-28

HRG PROJECT NUMBER:	R003887.0427
PLAN DATE:	2023.09.01
DRAWING SCALE:	AS SHOWN
PROJ. MANAGER:	SBB

REVISIONS

NO.	DATE	DESCRIPTION
1	2024.01.16	PER VARIOUS REVIEW AGENCY COMMENTS
2		
3		
4		
5		
6		
7		
8		
9		

SHEET TITLE:
STORMWATER NOTES & DETAILS

SP-23-034

SHEET: CD-7 — 49 OF 81

FILE PATH & NAME: P:\0038\003887_0427\C3D\Plan Sets\SP\L003887042 7CD.dwg LAYOUT: CD-7– STORM – SP LAST PLOTTED:1/16/2024 9:11 AM BY: CCORNELIUS

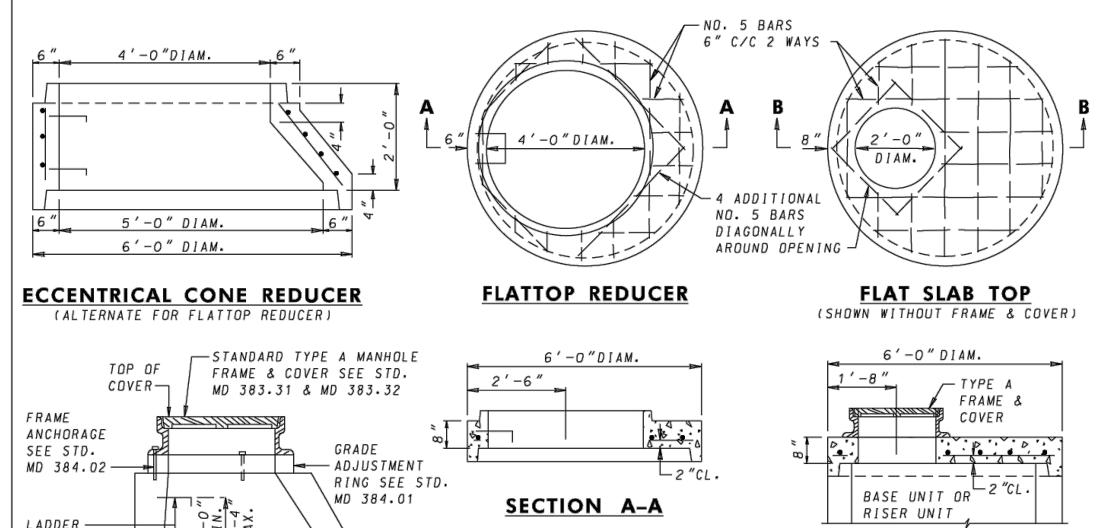

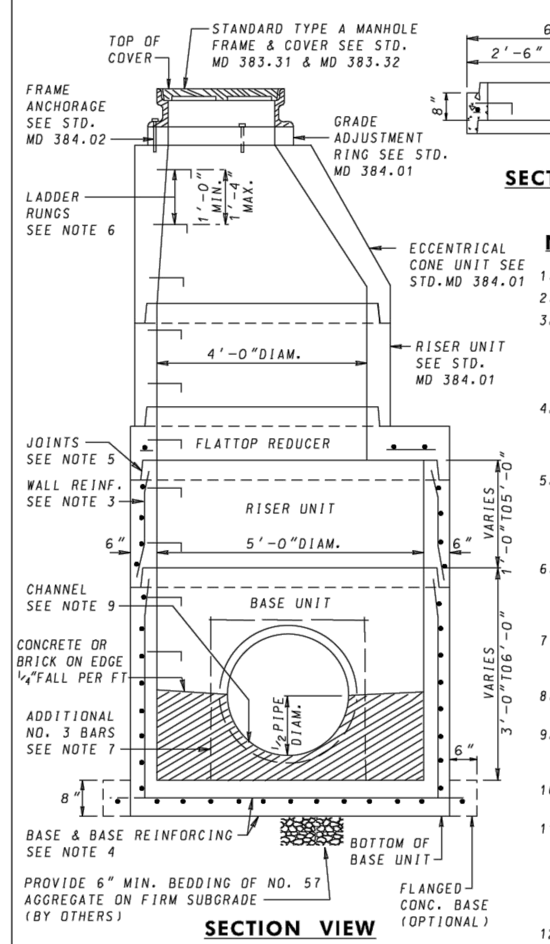

NOTES

1. MANHOLES SHALL BE CONSTRUCTED IN ACCORDANCE WITH AASHTO M 199.
2. CONCRETE SHALL BE MIX NO.6 (4500PSI).
3. WALL REINFORCEMENT FOR BASE UNITS, RISER UNITS AND ECCENTRICAL CONE UNITS SHALL BE REINFORCEMENT BARS OR WELDED WIRE FABRIC WITH A MINIMUM AREA OF 0.15 IN^2/FT AND MAXIMUM SPACING OF 9" FOR THE 60" DIAMETER MANHOLES. WELDED WIRE FABRIC SHALL CONFORM TO ASTM A 185 AND A 52. REINFORCEMENT SHALL MEET ASTM A 615, GRADE 60.
4. BASE REINFORCEMENT SHALL BE REINFORCEMENT BARS OR WELDED WIRE FABRIC WITH A MINIMUM AREA OF 0.27 IN^2/FT AND A MAXIMUM SPACING OF 8" WITH 2" COVER FROM THE TOP OF BASE. THE BASE SHALL BE CAST MONOLITHIC WITH THE UNIT OR JOINTED PER THE MANUFACTURER'S DESIGN.
5. THE MANUFACTURER SHALL FORM MALE AND FEMALE ENDS OF JOINTS USING THEIR OWN DESIGN. THE JOINTS SHALL BE SEALED BY THE CONTRACTOR AND MADE WATERTIGHT USING (WHERE APPLICABLE) MORTAR, RUBBER O-RING GASKETS MEETING ASTM C 361 AND C 443 OR FLEXIBLE PLASTIC GASKETS MEETING AASHTO M 198 TYPE B.
6. LADDER RUNGS SHALL BE INSTALLED IN VERTICAL ALIGNMENT AT 1'-4" MAXIMUM C/C. RUNG TYPES SHALL BE IN ACCORDANCE WITH STANDARDS MD 383.91 OR 383.92. LADDER RUNGS SHALL BE INCIDENTAL TO THE COST OF THE MANHOLE.
7. WHEN THE DISTANCE BETWEEN MUTIPLE OPENINGS IN THE BASE UNIT OR ANY RISER UNIT IS LESS THAN 6" ADDITIONAL NO.3 BARS ARE REQUIRED AROUND OPENINGS.
8. LIFT HOLES OR LIFT EYES SHALL BE PROVIDED IN EACH SECTION FOR HANDLING.
9. MIX NO.2 CONCRETE OR BRICK CHANNEL SHALL BE PROVIDED IN THE FIELD AND SHALL SLOPE 2" PER FOOT TOWARD OUTLET OR AS DIRECTED BY THE ENGINEER.
10. THE DRIP STONE LANDING SHALL BE USED ONLY WHEN THERE ARE PIPES CONNECTED TO THE RISER UNITS. SEE STD. MD 384.13 FOR DETAILS.
11. MINIMUM DEPTH PAYMENT PER EACH SHALL BE 9'-0" MEASURED FROM THE BOTTOM OF THE BASE UNIT TO THE TOP OF THE MANHOLE COVER. VERTICAL DEPTH PAYMENT PER LINEAR FOOT SHALL INCLUDE ALL DEPTHS IN EXCESS OF 9'-0". THE COST OF THE DRIP STONE LANDING, NO.57 AGGREGATE, GROUT, SEALANT, AND ALL NECESSARY APPURTENANCES SHALL BE INCIDENTAL TO THE PRICE BID.
12. MANHOLE HAS BEEN DESIGNED FOR HS-25 LOADING, ACCORDING TO AASHTO LRFD BRIDGE DESIGN SPECIFICATIONS.

SPECIFICATION 305	CATEGORY CODE ITEMS		Maryland Department of Transportation STATE HIGHWAY ADMINISTRATION STANDARDS FOR HIGHWAYS AND INCIDENTAL STRUCTURES
APPROVED	DIRECTOR – OFFICE OF HIGHWAY DEVELOPMENT		60" DIAMETER PRECAST MANHOLE FOR 27" TO 36" PIPES
SHA StateHighway Administration	APPROVAL • SHA REVISIONS	APPROVAL • FEDERAL HIGHWAY ADMINISTRATION	
	APPROVAL 2-22-91	APPROVAL 1-2-91	
	REVISED 10-7-14	REVISED 9-29-14	
	REVISED –	REVISED	
	REVISED	REVISED	STANDARD NO. MD 384.03

MAXIMUM DRAINAGE AREA = 10 ACRES

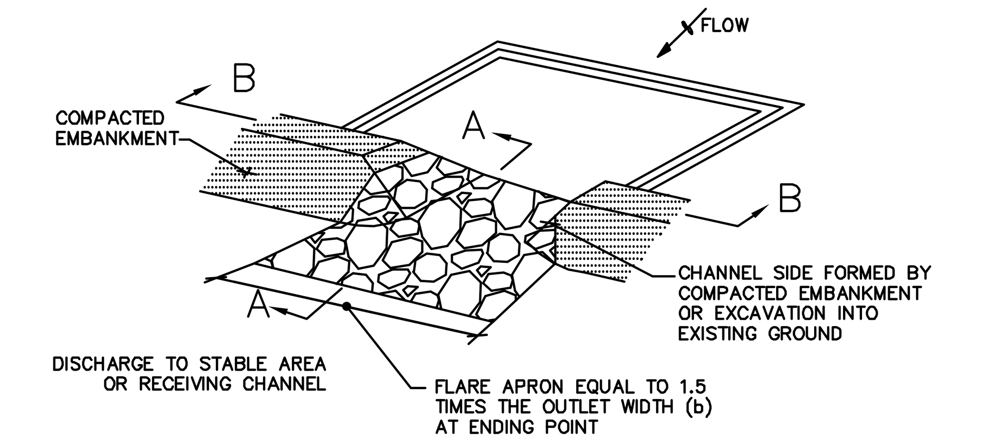

ISOMETRIC VIEW

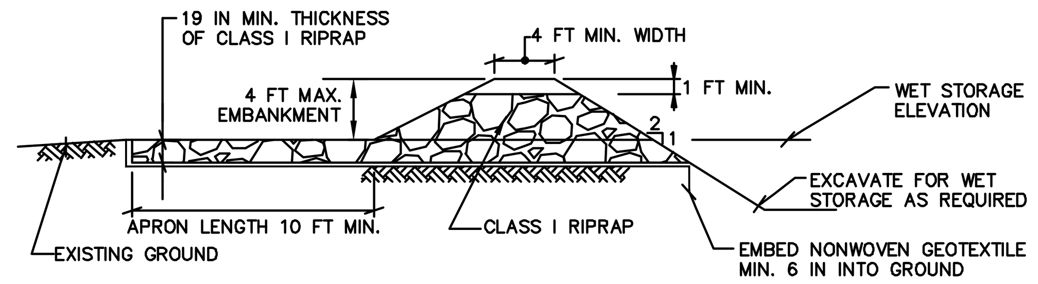

SECTION A–A

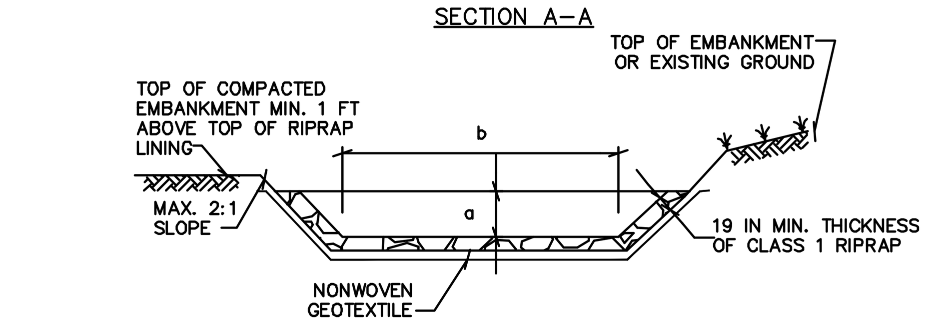

a – DEPTH OF OUTLET
b – BOTTOM WIDTH OF OUTLET

SECTION B–B

CONSTRUCTION SPECIFICATIONS

1. CONSTRUCT TRAP IN SUCH A MANNER THAT EROSION AND WATER POLLUTION ARE AVOIDED.
2. CLEAR, GRUB, AND STRIP ANY VEGETATION AND ROOT MAT FROM THE AREA UNDER THE EMBANKMENT AND TRAP BOTTOM.
3. USE FILL MATERIAL FREE OF ROOTS, WOODY VEGETATION, OVERSIZED STONES, ROCKS, ORGANIC MATERIAL, OR OTHER OBJECTIONABLE MATERIAL FOR THE EMBANKMENT.
4. CONSTRUCT TOP OF EMBANKMENT 1 FOOT MINIMUM ABOVE TOP OF RIPRAP OUTLET. COMPACT THE EMBANKMENT BY TRAVERSING WITH EQUIPMENT WHILE IT IS BEING CONSTRUCTED.
5. MAKE ALL CUT AND FILL SLOPES 2:1 OR FLATTER.
6. PLACE NONWOVEN GEOTEXTILE, AS SPECIFIED IN SECTION H–1 MATERIALS, OVER THE BOTTOM AND SIDES OF OUTLET AND APRON PRIOR TO PLACEMENT OF RIPRAP. OVERLAP SECTIONS OF GEOTEXTILE AT LEAST 1 FOOT WITH THE SECTION NEARER TO THE TRAP PLACED ON TOP. EMBED GEOTEXTILE AT LEAST 6 INCHES INTO EXISTING GROUND AT ENTRANCE OF OUTLET CHANNEL.
7. USE CLEAN CLASS 1 RIPRAP PLACED 19 INCHES IN DEPTH FOR THE OUTLET AND APRON. USE OF RECYCLED CONCRETE EQUIVALENT IS ACCEPTABLE.
8. CONSTRUCT AND MAINTAIN THE OUTLET ACCORDING TO APPROVED PLAN, AND IN SUCH A MANNER THAT EROSION AT OR BELOW THE OUTLET DOES NOT OCCUR.
9. STABILIZE THE EMBANKMENT AND INTERIOR SLOPES WITH SEED AND MULCH. STABILIZE POINTS OF CONCENTRATED INFLOW AS SHOWN ON APPROVED PLAN.
10. REMOVE SEDIMENT AND RESTORE TRAP TO ORIGINAL DIMENSIONS WHEN SEDIMENT HAS ACCUMULATED TO CLEANOUT ELEVATION (25% OF WET STORAGE DEPTH). DEPOSIT REMOVED SEDIMENT IN AN APPROVED AREA AND IN SUCH A MANNER THAT IT WILL NOT ERODE. KEEP POINTS OF INFLOW AND OUTFLOW AS WELL AS INTERIOR OF THE TRAP FREE FROM EROSION AND REMOVE ACCUMULATED DEBRIS. MAINTAIN EMBANKMENTS TO CONTINUOUSLY MEET REQUIREMENTS FOR ADEQUATE VEGETATIVE ESTABLISHMENT IN ACCORDANCE WITH SECTION B–4 VEGETATIVE STABILIZATION. REMOVE ANY TREES, BRUSH, OR OTHER WOODY VEGETATION GROWING ON EMBANKMENT OR NEAR PRINCIPAL SPILLWAY. MAINTAIN LINE, GRADE, AND CROSS SECTION.
11. WHEN DEWATERING TRAP, PASS THE REMOVED WATER THROUGH AN APPROVED SEDIMENT CONTROL PRACTICE.
12. UPON REMOVAL, GRADE AND STABILIZE THE AREA OCCUPIED BY TRAP.

SWM ID	DEPTH OF OUTLET (a) (FT)	BOTTOM WIDTH OF OUTLET (b) (FT)	FLARE APRON (FT)	APRON LENGTH (FT)
SWM–2A	0.5	4	6	10
SWM–2B	0.5	5	7.5	10
SWM–4	0.5	4	6	10
SWM–5	0.5	12	18	10
SWM–11	1.5	5	7.5	10
SWM–13	0.5	5	7.5	10

RIPRAP OUTLET TRAP DETAIL

NOT TO SCALE

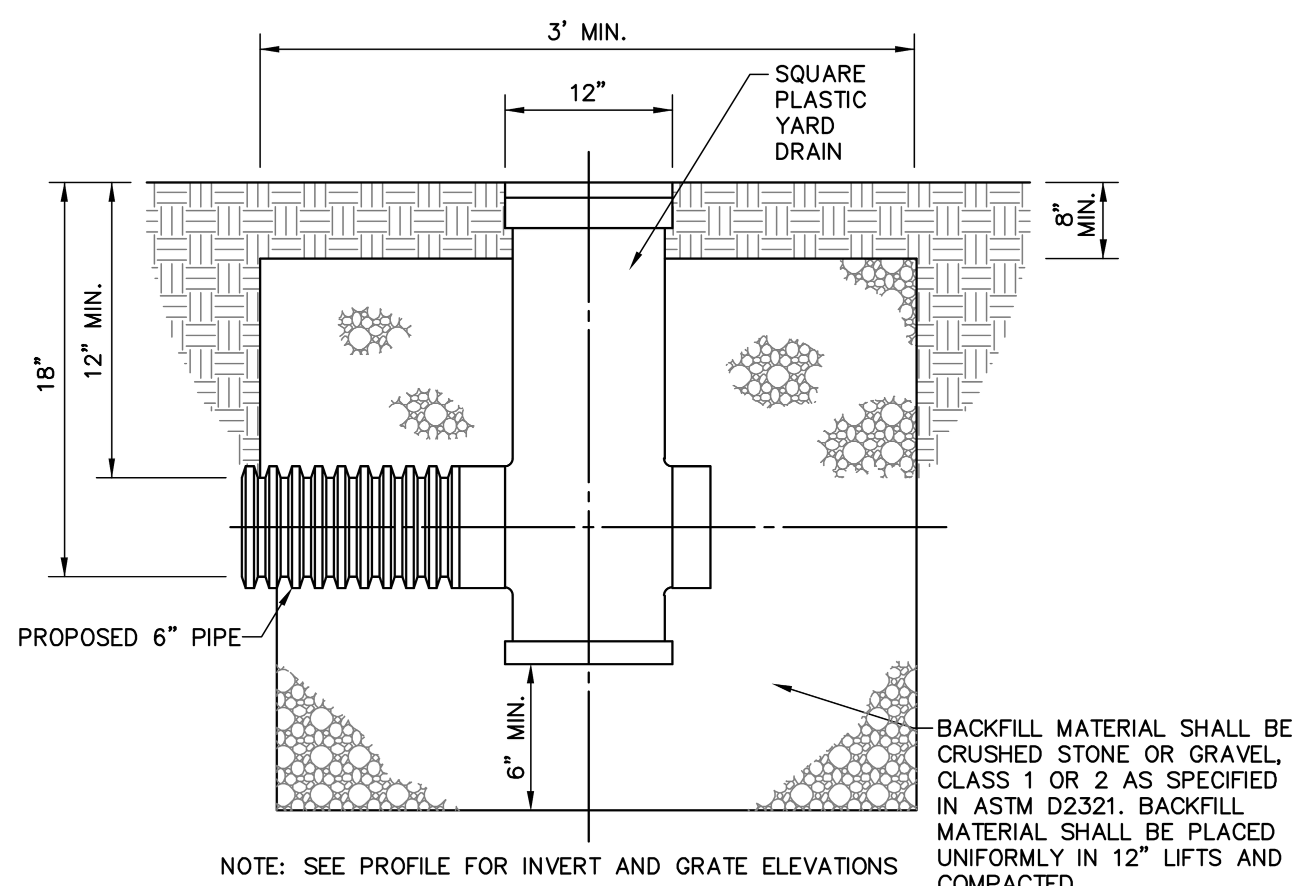

NOTE: SEE PROFILE FOR INVERT AND GRATE ELEVATIONS

YARD DRAIN BASIN DETAIL

NOT TO SCALE

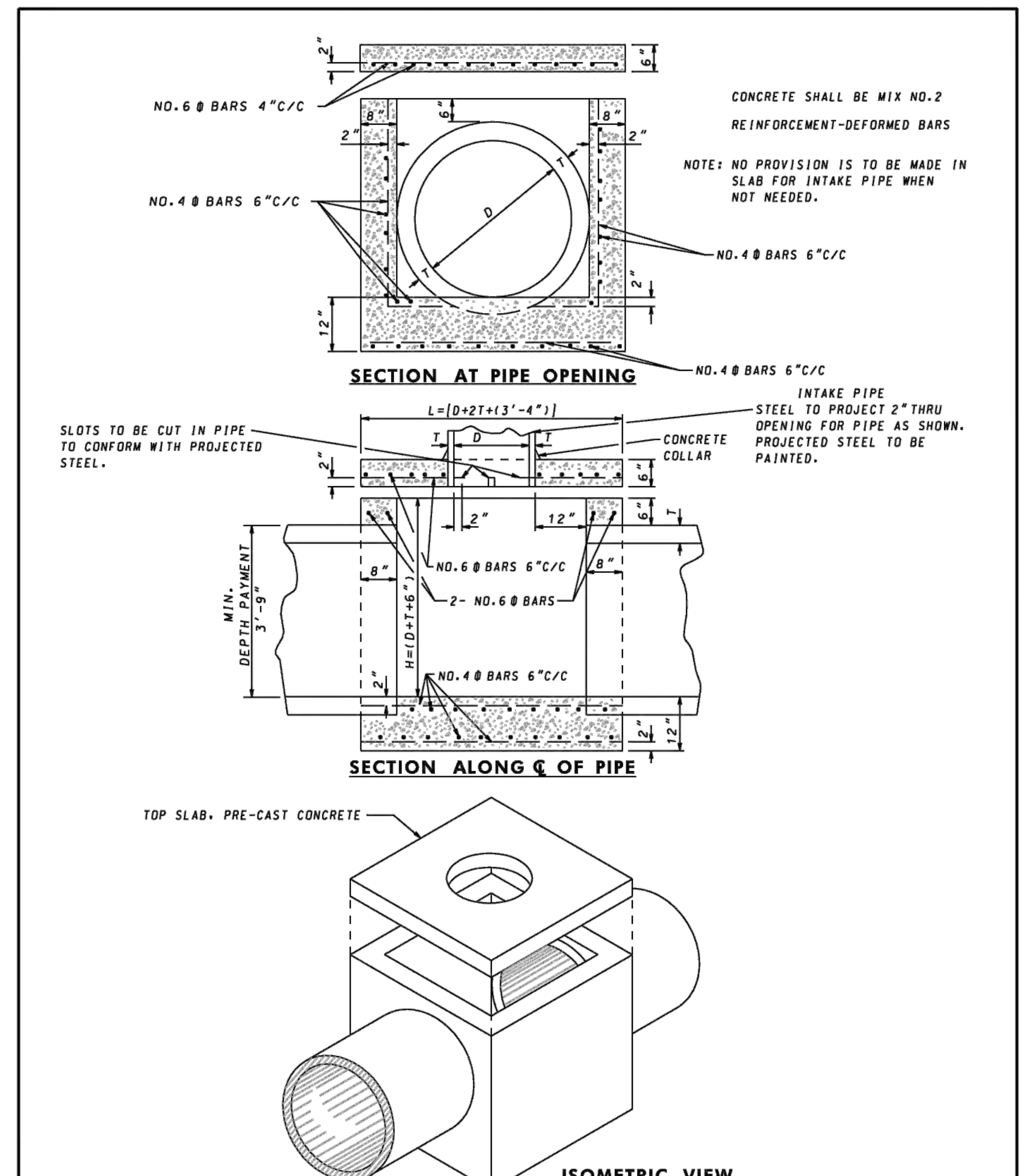

SPECIFICATION 305	CATEGORY CODE ITEMS		Maryland Department of Transportation STATE HIGHWAY ADMINISTRATION STANDARDS FOR HIGHWAYS AND INCIDENTAL STRUCTURES
APPROVED	DIRECTOR – OFFICE OF HIGHWAY DEVELOPMENT		STANDARD JUNCTION BOX
SHA StateHighway Administration	APPROVAL • SHA REVISIONS	APPROVAL • FEDERAL HIGHWAY ADMINISTRATION	
	APPROVAL 2-7-51	APPROVAL 3-23-56	
	REVISED 10-1-01	REVISED	
	REVISED	REVISED	
	REVISED	REVISED	STANDARD NO. MD 386.11

HERBERT, ROWLAND & GRUBIC, INC.
5 NORTH MAIN STREET
SUITE 3
CHAMBERSBURG, PA 17201
717. 263.2070 | hrg-inc.com

SITE PLAN
FOR
MERITUS SCHOOL OF OSTEOPATHIC MEDICINE
GRADUATE STUDENT HOUSING
1500 MT. AETNA ROAD
HAGERSTOWN, MD 21742
TAX MAP: 50 / GRID: 14 / PARCEL: 1207
HAGERSTOWN WASHINGTON COUNTY MARYLAND

PROFESSIONAL CERTIFICATION:

STATE OF MARYLAND SCOTT BERT 59144 PROFESSIONAL ENGINEER

I HEREBY CERTIFY THAT THESE DOCUMENTS WERE PREPARED OR APPROVED BY ME, AND THAT I AM DULY LICENSED PROFESSIONAL ENGINEER UNDER THE LAWS OF THE STATE OF MARYLAND. LICENSE NO. 59144, EXP. DATE: 2024–03–28

HRG PROJECT NUMBER:	R003887.0427
PLAN DATE:	2023.09.01
DRAWING SCALE:	AS SHOWN
PROJ. MANAGER:	SBB

REVISIONS

NO.	DATE	DESCRIPTION
1	2024.01.16	PER VARIOUS REVIEW AGENCY COMMENTS
2		
3		
4		
5		
6		
7		
8		
9		

SHEET TITLE:
STORMWATER NOTES & DETAILS

SP-23-034

SHEET: CD-8 | 50 OF 81

NOTICE OF REQUIRED STORMWATER MANAGEMENT INSPECTIONS
SAND FILTERS, BIORETENTION AND RAIN GARDEN FACILITIES

The following inspections are required to be performed by the Qualified Professional for the construction of any Sand Filter, Bio-Retention or Rain Garden Facility. Additional inspections may be needed based on professional engineering judgment. Each inspection is required at the start of each stage.

		SWM- 1	SWM- 2A	SWM- 2B	SWM- 3	SWM- 4
EXCAVATION OF FACILITY – Prior to excavation, verify sediment and erosion control features are in place to prevent sediment inflow. Verify all flagging required in the area for sensitive area protection. Verify grading is accurately staked-out and re-staked as needed. Facility dimensions shall be verified and soils checked for infiltration. Verify contributing area is permanently stabilized. Verify that water is not present. Ensure roughening of side walls if sheared and sealed by heavy equipment. Verify that compaction of facility base is minimized.	Certifying Engineer					
	Date					
	County Inspector					
	Date					
PLACEMENT OF FILTER CLOTH (Trenches) – Ensure filter fabric is overlapping six (6) inches between strips of cloth. Ensure tree roots or other obstacles are removed from facility walls or sides and base to prevent tearing. Verify that uphill fabric roll overlaps two (2) feet over downhill roll.	Certifying Engineer					
	Date					
	County Inspector					
	Date					
PLACEMENT OF SAND FILTER LAYER OR GRAVEL DIAPHRAGM - Verify depth and width of sand and/or diaphragm layer. Verify fill material.	Certifying Engineer					
	Date					
	County Inspector					
	Date					
PLACEMENT OF FILTERING MEDIA – Verify bottom layer material and thickness. Verify sand and/or filter media layer material and thickness. Verify filter fabric or pea gravel used between sand layers. Verify top filter media layer.	Certifying Engineer					
	Date					
	County Inspector					
	Date					
PLACEMENT OF UNDERDRAINS AND OBSERVATION WELLS – Location, size and material of under drain and observation wells shall be verified prior to stone placement. Verify pipe ends capped. Verify 3" gravel cover.	Certifying Engineer					
	Date					
	County Inspector					
	Date					
STABILIZATION AND LANDSCAPING - Verify site top soiled, seeded and mulched. Verify embankment top soiled and seeded. Verify location, size, type and number of planted landscape material. Verify no more than 1/8 inch root ball exposed. Verify planting stock kept moist during on-site storage. Verify installation location, size, material type of fencing or other safety barriers.	Certifying Engineer					
	Date					
	County Inspector					
	Date					

The Qualified Professional may request the presence of a County Construction Standards Inspector at least 24 hours in advance by calling 240-313-2460.

NOTICE OF REQUIRED STORMWATER MANAGEMENT INSPECTIONS
SAND FILTERS, BIORETENTION AND RAIN GARDEN FACILITIES

The following inspections are required to be performed by the Qualified Professional for the construction of any Sand Filter, Bio-Retention or Rain Garden Facility. Additional inspections may be needed based on professional engineering judgment. Each inspection is required at the start of each stage.

		SWM- 5	SWM- 6	SWM- 7	SWM- 8A	SWM- 8B
EXCAVATION OF FACILITY – Prior to excavation, verify sediment and erosion control features are in place to prevent sediment inflow. Verify all flagging required in the area for sensitive area protection. Verify grading is accurately staked-out and re-staked as needed. Facility dimensions shall be verified and soils checked for infiltration. Verify contributing area is permanently stabilized. Verify that water is not present. Ensure roughening of side walls if sheared and sealed by heavy equipment. Verify that compaction of facility base is minimized.	Certifying Engineer					
	Date					
	County Inspector					
	Date					
PLACEMENT OF FILTER CLOTH (Trenches) – Ensure filter fabric is overlapping six (6) inches between strips of cloth. Ensure tree roots or other obstacles are removed from facility walls or sides and base to prevent tearing. Verify that uphill fabric roll overlaps two (2) feet over downhill roll.	Certifying Engineer					
	Date					
	County Inspector					
	Date					
PLACEMENT OF SAND FILTER LAYER OR GRAVEL DIAPHRAGM - Verify depth and width of sand and/or diaphragm layer. Verify fill material.	Certifying Engineer					
	Date					
	County Inspector					
	Date					
PLACEMENT OF FILTERING MEDIA – Verify bottom layer material and thickness. Verify sand and/or filter media layer material and thickness. Verify filter fabric or pea gravel used between sand layers. Verify top filter media layer.	Certifying Engineer					
	Date					
	County Inspector					
	Date					
PLACEMENT OF UNDERDRAINS AND OBSERVATION WELLS – Location, size and material of under drain and observation wells shall be verified prior to stone placement. Verify pipe ends capped. Verify 3" gravel cover.	Certifying Engineer					
	Date					
	County Inspector					
	Date					
STABILIZATION AND LANDSCAPING - Verify site top soiled, seeded and mulched. Verify embankment top soiled and seeded. Verify location, size, type and number of planted landscape material. Verify no more than 1/8 inch root ball exposed. Verify planting stock kept moist during on-site storage. Verify installation location, size, material type of fencing or other safety barriers.	Certifying Engineer					
	Date					
	County Inspector					
	Date					

The Qualified Professional may request the presence of a County Construction Standards Inspector at least 24 hours in advance by calling 240-313-2460.

NOTICE OF REQUIRED STORMWATER MANAGEMENT INSPECTIONS
SAND FILTERS, BIORETENTION AND RAIN GARDEN FACILITIES

The following inspections are required to be performed by the Qualified Professional for the construction of any Sand Filter, Bio-Retention or Rain Garden Facility. Additional inspections may be needed based on professional engineering judgment. Each inspection is required at the start of each stage.

		SWM- 9A	SWM- 9B	SWM- 10A	SWM- 10B	SWM- 10C
EXCAVATION OF FACILITY – Prior to excavation, verify sediment and erosion control features are in place to prevent sediment inflow. Verify all flagging required in the area for sensitive area protection. Verify grading is accurately staked-out and re-staked as needed. Facility dimensions shall be verified and soils checked for infiltration. Verify contributing area is permanently stabilized. Verify that water is not present. Ensure roughening of side walls if sheared and sealed by heavy equipment. Verify that compaction of facility base is minimized.	Certifying Engineer					
	Date					
	County Inspector					
	Date					
PLACEMENT OF FILTER CLOTH (Trenches) – Ensure filter fabric is overlapping six (6) inches between strips of cloth. Ensure tree roots or other obstacles are removed from facility walls or sides and base to prevent tearing. Verify that uphill fabric roll overlaps two (2) feet over downhill roll.	Certifying Engineer					
	Date					
	County Inspector					
	Date					
PLACEMENT OF SAND FILTER LAYER OR GRAVEL DIAPHRAGM - Verify depth and width of sand and/or diaphragm layer. Verify fill material.	Certifying Engineer					
	Date					
	County Inspector					
	Date					
PLACEMENT OF FILTERING MEDIA – Verify bottom layer material and thickness. Verify sand and/or filter media layer material and thickness. Verify filter fabric or pea gravel used between sand layers. Verify top filter media layer.	Certifying Engineer					
	Date					
	County Inspector					
	Date					
PLACEMENT OF UNDERDRAINS AND OBSERVATION WELLS – Location, size and material of under drain and observation wells shall be verified prior to stone placement. Verify pipe ends capped. Verify 3" gravel cover.	Certifying Engineer					
	Date					
	County Inspector					
	Date					
STABILIZATION AND LANDSCAPING - Verify site top soiled, seeded and mulched. Verify embankment top soiled and seeded. Verify location, size, type and number of planted landscape material. Verify no more than 1/8 inch root ball exposed. Verify planting stock kept moist during on-site storage. Verify installation location, size, material type of fencing or other safety barriers.	Certifying Engineer					
	Date					
	County Inspector					
	Date					

The Qualified Professional may request the presence of a County Construction Standards Inspector at least 24 hours in advance by calling 240-313-2460.

NOTICE OF REQUIRED STORMWATER MANAGEMENT INSPECTIONS
SAND FILTERS, BIORETENTION AND RAIN GARDEN FACILITIES

The following inspections are required to be performed by the Qualified Professional for the construction of any Sand Filter, Bio-Retention or Rain Garden Facility. Additional inspections may be needed based on professional engineering judgment. Each inspection is required at the start of each stage.

		SWM- 10D	SWM- 11	SWM- 12A	SWM- 12B	SWM- 13
EXCAVATION OF FACILITY – Prior to excavation, verify sediment and erosion control features are in place to prevent sediment inflow. Verify all flagging required in the area for sensitive area protection. Verify grading is accurately staked-out and re-staked as needed. Facility dimensions shall be verified and soils checked for infiltration. Verify contributing area is permanently stabilized. Verify that water is not present. Ensure roughening of side walls if sheared and sealed by heavy equipment. Verify that compaction of facility base is minimized.	Certifying Engineer					
	Date					
	County Inspector					
	Date					
PLACEMENT OF FILTER CLOTH (Trenches) – Ensure filter fabric is overlapping six (6) inches between strips of cloth. Ensure tree roots or other obstacles are removed from facility walls or sides and base to prevent tearing. Verify that uphill fabric roll overlaps two (2) feet over downhill roll.	Certifying Engineer					
	Date					
	County Inspector					
	Date					
PLACEMENT OF SAND FILTER LAYER OR GRAVEL DIAPHRAGM - Verify depth and width of sand and/or diaphragm layer. Verify fill material.	Certifying Engineer					
	Date					
	County Inspector					
	Date					
PLACEMENT OF FILTERING MEDIA – Verify bottom layer material and thickness. Verify sand and/or filter media layer material and thickness. Verify filter fabric or pea gravel used between sand layers. Verify top filter media layer.	Certifying Engineer					
	Date					
	County Inspector					
	Date					
PLACEMENT OF UNDERDRAINS AND OBSERVATION WELLS – Location, size and material of under drain and observation wells shall be verified prior to stone placement. Verify pipe ends capped. Verify 3" gravel cover.	Certifying Engineer					
	Date					
	County Inspector					
	Date					
STABILIZATION AND LANDSCAPING - Verify site top soiled, seeded and mulched. Verify embankment top soiled and seeded. Verify location, size, type and number of planted landscape material. Verify no more than 1/8 inch root ball exposed. Verify planting stock kept moist during on-site storage. Verify installation location, size, material type of fencing or other safety barriers.	Certifying Engineer					
	Date					
	County Inspector					
	Date					

The Qualified Professional may request the presence of a County Construction Standards Inspector at least 24 hours in advance by calling 240-313-2460.

HRG
HERBERT, ROWLAND & GRUBIC, INC.
5 NORTH MAIN STREET
SUITE 3
CHAMBERSBURG, PA 17201
717. 263.2070 | hrg-inc.com

SITE PLAN
FOR
MERITUS SCHOOL OF OSTEOPATHIC MEDICINE
GRADUATE STUDENT HOUSING
1500 MT. AETNA ROAD
HAGERSTOWN, MD 21742
TAX MAP-50 GRID: 14 / PARCEL: 1207
HAGERSTOWN WASHINGTON COUNTY MARYLAND

PROFESSIONAL CERTIFICATION:

STATE OF MARYLAND
SCOTT BERG
5914A
PROFESSIONAL ENGINEER

I HEREBY CERTIFY THAT THESE DOCUMENTS WERE PREPARED OR APPROVED BY ME, AND THAT I AM DULY LICENSED PROFESSIONAL ENGINEER UNDER THE LAWS OF THE STATE OF MARYLAND. LICENSE NO. 59144, EXP. DATE: 2024-03-28

HRG PROJECT NUMBER:	R003887.0427
PLAN DATE:	2023.09.01
DRAWING SCALE:	AS SHOWN
PROJ. MANAGER:	SBB

REVISIONS

NO.	DATE	DESCRIPTION
1	2024.01.16	PER VARIOUS REVIEW AGENCY COMMENTS
2		
3		
4		
5		
6		
7		
8		
9		

SHEET TITLE:
STORMWATER NOTES & DETAILS

SP-23-034

SHEET: CD-9

SOIL EROSION, SEDIMENT CONTROL & SEEDING NOTES

1. ALL SOIL EROSION/SEDIMENT CONTROL MEASURES SHALL COMPLY WITH THE "2011 MARYLAND STANDARDS AND SPECIFICATIONS FOR SOIL EROSION AND SEDIMENT CONTROL" AND THE PROVISIONS OF THE APPROVED PLAN.
2. ALL GRADING AND STABILIZATION SHALL COMPLY WITH THE "2011 MARYLAND STANDARDS AND SPECIFICATIONS FOR SOIL EROSION AND SEDIMENT CONTROL", "SECTION B -GRADING AND STABILIZATION" AND THE PROVISIONS OF THE APPROVED PLAN.
3. ALL SOIL EROSION AND SEDIMENT CONTROL PRACTICES (BMP'S) ARE TO BE CONSTRUCTED AND/OR INSTALLED PRIOR TO OR AT THE INITIATION OF GRADING IN ACCORDANCE WITH "2011 MARYLAND STANDARDS AND SPECIFICATIONS FOR SOIL EROSION AND SEDIMENT CONTROL", AND THE APPROVED PLAN.
4. A GRADING UNIT IS THE MAXIMUM CONTIGUOUS AREA ALLOWED TO BE GRADED AT A GIVEN TIME AND IS LIMITED TO 20 ACRES. WORK MAY PROCEED TO A SUBSEQUENT GRADING UNIT WHEN AT LEAST 50
   PERCENT OF THE DISTURBED AREA IN THE PRECEDING GRADING UNIT HAS BEEN STABILIZED AND APPROVED BY THE ENFORCEMENT AUTHORITY AND/OR THE WASHINGTON COUNTY SOIL CONSERVATION DISTRICT (APPROVAL AUTHORITY). UNLESS OTHERWISE SPECIFIED AND APPROVED BY THE APPROVAL AUTHORITY, NO MORE THAN 30 ACRES CUMULATIVELY MAY BE DISTURBED AT A GIVEN TIME.
5. FOR INITIAL SOIL DISTURBANCE OR RE-DISTURBANCE, TEMPORARY OR PERMANENT STABILIZATION MUST BE COMPLETED WITHIN:
   a) THREE (3) CALENDAR DAYS AS TO THE SURFACE OF ALL PERIMETER DIKES, SWALES, DITCHES, PERIMETER SLOPES, AND ALL SLOPES STEEPER THAN 3 HORIZONTAL TO 1 VERTICAL (3:1); AND
   b) SEVEN (7) CALENDAR DAYS AS TO ALL OTHER DISTURBED OR GRADED AREAS ON THE PROJECT SITE NOT UNDER ACTIVE GRADING.
6. STOCKPILES MUST BE STABILIZED IN ACCORDANCE WITHIN THE 7 DAY STABILIZATION REQUIREMENT, AS WELL AS, STANDARD B-4-1 INCREMENTAL STABILIZATION AND STANDARD B-4-4 TEMPORARY STABILIZATION (AS APPLICABLE).
7. ALL CONSTRUCTED CHANNELS AND SWALES SHALL HAVE SPECIFIED TREATMENT INSTALLED TO THE DESIGN FLOW DEPTH COMPLETED DOWNSTREAM TO UPSTREAM AS CONSTRUCTION PROGRESSES. AN INSTALLATION DETAIL SHALL BE SHOWN ON THE PLANS.
8. ALL STORM DRAIN AND SANITARY SEWER LINES NOT IN PAVED AREAS ARE TO BE MULCHED AND SEEDED WITHIN 3 DAYS OF INITIAL BACKFILL UNLESS OTHERWISE SPECIFIED ON PLANS.
9. ELECTRIC POWER, TELEPHONE, AND GAS LINES ARE TO BE COMPACTED, SEEDED, AND MULCHED WITHIN 3 DAYS AFTER INITIAL BACKFILL UNLESS OTHERWISE SPECIFIED ON PLANS.
10. NO SLOPE SHALL BE GREATER THAN 2:1.
11. AS REQUIRED BY SECTION B, OF THE MARYLAND STANDARDS AND SPECIFICATIONS FOR SOIL EROSION AND SEDIMENT CONTROL, "ADEQUATE VEGETATIVE STABILIZATION", IS DEFINED AS 95 PERCENT GROUND COVER. THE WASHINGTON COUNTY SOIL CONSERVATION DISTRICT REQUIRES THE
    PROJECT ADHERE TO THIS FOR SCHEDULING OF THE FINAL SITE CLOSEOUT REVIEW, AND/OR RELEASE OF THE SITE FOR SOIL EROSION AND SEDIMENT CONTROL.
12. TEMPORARY DRAWDOWN DEVICES SHALL BE REMOVED AFTER THE SITE IS STABILIZED AND AUTHORIZATION IS RECIEVED FROM THE MD DEPT. OF THE ENVIRONMENT & NRCS.

FOR SITES 1.0 ACRE OR MORE, THE FOLLOWING ARE REQUIRED:

A. MARYLAND DEPARTMENT OF THE ENVIRONMENT, GENERAL PERMIT FOR STORMWATER ASSOCIATED WITH A CONSTRUCTION ACTIVITY, NPDES PERMIT NUMBER MDRC, STATE DISCHARGE PERMIT NUMBER 14GP, OR AN INDIVIDUAL PERMIT.

B. THE MARYLAND DEPARTMENT OF THE ENVIRONMENT GENERAL/INDIVIDUAL PERMIT -NOTICE OF INTENT- NOI) APPLICATION AND PERMIT SHALL BE POSTED AND/OR AVAILABLE ON-SITE AT ALL TIMES.

C. DURING CONSTRUCTION, ALL SOIL EROSION AND SEDIMENT CONTROL PRACTICES (BMP'S) SHALL BE INSPECTED AND RECORDED ON THE "STANDARD INSPECTION FORM", "GENERAL PERMIT FOR STORMWATER ASSOCIATED WITH CONSTRUCTION ACTIVITY" PER THE MARYLAND DEPARTMENT OF THE ENVIRONMENT (GENERAL/INDIVIDUAL PERMIT -NOTICE OF INTENT -NOI).

D. FOLLOWING CONSTRUCTION AND RELEASE OF THE SITE FOR SOIL EROSION AND SEDIMENT CONTROL BY THE WASHINGTON COUNTY SOIL CONSERVATION DISTRICT, I.E., ALL PORTIONS OF A SITE HAVE BEEN PERMANENTLY STABILIZED, AND ALL STORMWATER DISCHARGES FROM CONSTRUCTION SITES THAT ARE AUTHORIZED BY THE PERMIT ARE ELIMINATED, THE AUTHORIZED PERMITTEE SHALL SUBMIT THE MARYLAND DEPARTMENT OF THE ENVIRONMENT, GENERAL/INDIVIDUAL PERMIT -NOTICE OF TERMINATION-NOT.

CONSTRUCTION SEQUENCE

PRE CONSTRUCTION – PHASE 1

NOTIFY WCSCD AT 301-797-6821, WASHINGTON COUNTY PLANNING, PUBLIC HEALTH OFFICE, ENGINEERING AND DIVISION OF CONSTRUCTION, AND CITY OF HAGERSTOWN UTILITIES AT LEAST (5) DAYS PRIOR TO THE START OF CONSTRUCTION TO SCHEDULE A PRE-CONSTRUCTION MEETING.

STAGE 1A

1. REMOVE EXISTING BOLLARDS NEAR PROPOSED ENTRANCE, REMOVE EXISTING 15" STORM PIPE, AND REMOVE PORTION OF EXISTING SIDEWALK AS SHOWN ON THE PLANS.
2. INSTALL BYPASS PIPE HW-BP2 TO EW-BP1 AND OUTLET PROTECTION.
3. INSTALL STABILIZED CONSTRUCTION ENTRANCE SCE-1 AT MAIN ENTRANCE.
4. INSTALL ORANGE CONSTRUCTION FENCE AROUND THE PERIMETER OF THE LIMIT OF DISTURBANCE TO PROTECT EXISTING TREES AND AROUND INDIVIDUAL TREES AS INDICATED ON THE PLAN.
5. INSTALL PERIMETER SEDIMENT CONTROLS AS SHOWN ON THE PLANS INCLUDING SILT FENCE 1, 1A, 2, 2A, 3, AND 3A.
6. CLEAR AND GRUB JUST ENOUGH EXISTING TREES AND VEGETATION IN ORDER TO CONSTRUCT SEDIMENT TRAP 1. CLEARING AND GRUBBING IS NOT TO EXCEED THE LIMITS OF WORK FOR STAGE 1A AS DEPICTED ON THE PLAN.
7. INSTALL FOREST CONSERVATION AREA SIGNS ALONG NEW FOREST CONSERVATION EASEMENT LINE AS WORK PROGRESSES.
8. CONSTRUCT SEDIMENT TRAP 1 AND NECESSARY BAFFLES, OUTLET STRUCTURES, TEMPORARY GABION INFLOW PROTECTION, AND OUTLET PROTECTION.
13. CONSTRUCT SEWER ACROSS MT. AETNA FROM EX SSMH-15 TO PROPOSED SSMH-1 AND SSMH-10. CONSTRUCT PROPOSED 8" WATER LINE ACROSS MT. AETNA. PROVIDE TRAFFIC CONTROL AS NECESSARY AND PROVIDE TEMPORARY PAVEMENT RESTORATION IN MT. AETNA.
14. CONSTRUCT SEWER LATERAL TO CONNECT THE CHILDREN'S VILLAGE. THE CONNECTION TO PUBLIC SEWER MUST BE FINALIZED PRIOR TO THE ABANDONMENT OR DISRUPTION OF THE EXISTING SEPTIC SYSTEM.
15. ONCE THE CHILDREN'S VILLAGE PRIVATE SEWER IS TRANSFERRED OVER TO PUBLIC SEWER THE EXISTING HOLDING TANK CAN BE CRUSHED AND FILLED IN. DOCUMENTATION OF THIS SHALL BE PROVIDED TO THE WASHINGTON COUNTY PUBLIC HEALTH OFFICE.
16. CLEAR AND GRUB EXISTING TREES AND VEGETATION AND STRIP TOPSOIL ONLY AS NEEDED AS WORK PROGRESSES. CLEARING AND GRUBBING IS NOT TO EXCEED THE LIMITS OF WORK FOR STAGE 1A AS DEPICTED ON THE PLAN. TOPSOIL RESERVED FOR SEEDED AREAS SHALL BE PLACED IN THE TEMPORARY TOPSOIL STOCKPILE LOCATIONS SHOWN ON THE PLAN. REMOVE ANY EXCESS TOPSOIL FROM SITE.
17. TEMPORARILY SEED AND MULCH ALL TOPSOIL STOCKPILES IN ACCORDANCE WITH THE SOIL EROSION, SEDIMENT CONTROL, & SEEDING NOTES AND SUMMARIES.
13. BEGIN MASS GRADING FOR BUILDINGS 2 AND 4. MAINTAIN POSITIVE DRAINAGE TO SEDIMENT TRAP 1 AND E&S CONTROL BMPS. DISTURBANCE SHALL NOT EXCEED THE LIMIT OF WORK FOR STAGE 1A AS DEPICTED ON THE PLAN.
14. BEGIN CONSTRUCTION OF BUILDINGS 2 AND 4.

STAGE 1B

15. INSTALL PERIMETER SEDIMENT CONTROLS AS SHOWN ON THE PLANS INCLUDING SILT FENCE 4 THROUGH 17A.
16. CLEAR AND GRUB EXISTING TREES AND VEGETATION IN ORDER TO CONSTRUCT SEDIMENT TRAPS 2 AND 3.
17. CONSTRUCT SEDIMENT TRAPS 1 AND 2 AND NECESSARY BAFFLES, OUTLET STRUCTURES, DEWATERING DEVICES, ANTI-SEEP COLLARS AND OUTLET PROTECTION. INSTALL PIPES AND STRUCTURES FROM EW-11 TO OS-11 AND EW-1 TO OS-1. INSTALL PERMANENT OUTLET STRUCTURES WITH TEMPORARY TOP OF GRATE ELEVATIONS AS INDICATED.
18. CONSTRUCT, TEMPORARY SEED AND MULCH TEMPORARY SWALES 1 AND 2 AS NECESSARY TO DIRECT RUNOFF TO SEDIMENT TRAPS 1 AND 2.
19. BEGIN MASS GRADING FOR BUILDINGS 1 AND 3. MAINTAIN POSITIVE DRAINAGE TO SEDIMENT TRAPS AND E&S CONTROL BMPS.
20. BEGIN CONSTRUCTION OF BUILDINGS 1 AND 3.
21. INSTALL PERIMETER SEDIMENT CONTROLS AS SHOWN ON THE PLANS INCLUDING SILT FENCE 18 THROUGH 22.
22. BEGIN CONSTRUCTION OF INNOVATION DRIVE AND INSTALL BYPASS PIPE FROM EW-BP3 TO HW-BP4 AND OUTLET PROTECTION. INSTALL SILT FENCE 22A.
23. CONSTRUCT SEDIMENT TRAP 4 AND NECESSARY OUTLET STRUCTURES, DEWATERING DEVICE, ANTI-SEEP COLLAR AND OUTLET PROTECTION. INSTALL PERMANENT OUTLET STRUCTURES AND PIPE FROM EW-4 TO OS-4. INSTALL SILT FENCE 23.
24. ROUGH GRADING OF INNOVATION DRIVE MAY COMMENCE.
25. TEMPORARY SEED AND MULCH ALL DISTURBED AREAS FOR STABILIZATION.

STAGE 2

26. ONCE INNOVATION DRIVE IS STABILIZED WITH STONE SUB-GRADE INSTALL CURB AND SIDEWALK, CONSTRUCT SWM-13 AND ASSOCIATED PIPES AND OUTLET PROTECTION AS SHOWN ON PLANS. CONTACT THE COUNTY DIVISION OF CONSTRUCTION, AT LEAST (5) DAYS PRIOR TO THE CONSTRUCTION OF STORMWATER FACILITIES TO SCHEDULE AN INTERIM INSPECTION (COUNTY MONITORS CONSTRUCTION/DISTRICT AUTHORIZES THIS PROGRESSION). NOTE: INSTALL IMPERMEABLE LINER AND FILTER MEDIA AND FINISH INSTALLATION OF MICRO-BIORETENTION / BIORETENTION. AFTER INSTALLATION OF LINER AND FILTER MEDIA, NO SEDIMENT RUNOFF IS TO ENTER BIORETENTION AREA. THIS APPLIES TO ALL MICRO-BIORETENTION / BIORETENTION FACILITIES THROUGH THE DURATION OF CONSTRUCTION.
27. CONVERT SEDIMENT TRAP 4 TO SWM-4.
28. INSTALL PIPES FROM TEMPORARY PIPE TO MH-5.1 TO I-5.6.
29. AS GRADES BEGIN TO REACH FINAL GRADE IN THE COURTYARD AREA AND UPSTREAM OF BUILDINGS 2 AND 4, REMOVE TEMPORARY SWALE 1 AND 2.
30. BEGIN TO ROUGH GRADE PARKING AND DRIVEWAY AREAS IN PHASE 1 AS SHOWN ON THE PLANS. PLACE STONE SUB GRADE FOR STABILIZATION.
31. BEGIN MASS GRADING FOR BUILDINGS 5 AND 6 PAD AREAS. DISTURBANCE SHALL NOT EXCEED THE LIMIT OF WORK FOR STAGE 2 AS DEPICTED ON THE PLAN.
32. AS GRADING PROGRESSES INSTALL UTILITIES WHERE INDICATED ON THE PLAN. ANY WATER PUMPED FROM UTILITY TRENCHES, FOR ANY REASON, SHALL BE DIRECTED INTO A FILTER BAG. THE PUMPED WATER SHALL NOT BE PERMITTED TO DIRECTLY ENTER LOCAL WATERWAYS.
33. LIMIT UTILITY TRENCH EXCAVATION AS MUCH AS POSSIBLE AND STABILIZE BACKFILL IMMEDIATELY.
34. ONCE THE PARKING AND DRIVEWAY AREAS ARE STABILIZED, INSTALL CURB AND SIDEWALK, CONSTRUCT SWM-6 AND 12 (NOTIFY COUNTY DIVISION OF CONSTRUCTION) AND ASSOCIATED PIPES AND OUTLET PROTECTIONS AS SHOWN ON PLANS.
35. CONSTRUCT SWM-7 THROUGH 10 (NOTIFY COUNTY DIVISION OF CONSTRUCTION) AND ASSOCIATED PIPES AND OUTLET PROTECTIONS AS SHOWN ON PLANS.
36. ONCE ALL UPSTREAM AREAS TO SEDIMENT TRAP 2 ARE STABILIZED CONVERT SEDIMENT TRAP TO SWM-11 (NOTIFY COUNTY DIVISION OF CONSTRUCTION).
37. ROUGH GRADE GRADUATE WAY AND PLACE STONE SUB-GRADE, INSTALL CURB AND SIDEWALK WHERE NEEDED FOR PHASE 1. THE PARALLEL PARKING SPACES WILL NOT BE INSTALLED DURING PHASE 1.
38. INSTALL TEMPORARY SWALE 3 AND TEMPORARY GABION INFLOW PROTECTION AS SHOWN ON PLANS.
39. INSTALL THE PIPES IN GRADUATE WAY WORKING UPSTREAM DOWN TO EW-2.1.
40. INSTALL SILT FENCE 24.
41. BRING PHASE 1 PARKING AREAS AND ACCESS DRIVES TO FINAL GRADE AND PROVIDE FINAL PAVEMENT COURSE. INSTALL ALL ASSOCIATED IMPROVEMENTS WITHIN PARKING AREAS. MILL AND OVERLAY MT. AETNA TO THE EXTENTS SHOWN ON THE PLAN.
42. FINAL GRADE ALL REMAINING AREAS. PERFORM PERMANENT SEEDING AND MULCHING IN ACCORDANCE WITH THE SOIL EROSION, SEDIMENT CONTROL, & SEEDING NOTES AND SUMMARIES.
43. PROVIDE TEMPORARY STABILIZATION FOR ALL REMAINING AREAS IN PHASE 2.
44. NOTIFY THE WCSCD AT 301-797-6821 AND THE WASHINGTON COUNTY DIVISION OF CONSTRUCTION AT LEAST (5) DAYS PRIOR TO THE REMOVAL OF ANY SOIL EROSION AND SEDIMENT CONTROL FEATURES.
45. VEGETATION MUST MEET THE 95% OVERALL STABILIZATION REQUIREMENT PER THE 2011 MARYLAND STANDARDS AND SPECIFICATIONS FOR SOIL PRIOR TO SCHEDULING SAID MEETING.
46. REMOVE SILT FENCE 3 THROUGH 23 AND PERMANENTLY STABILIZE ANY REMAINING AREAS OF SOIL EROSION FOR PHASE 1.

47. PRE CONSTRUCTION – PHASE 2
48. NOTIFY WCSCD AT 301-797-6821, WASHINGTON COUNTY PLANNING, ENGINEERING AND DIVISION OF CONSTRUCTION, AND CITy OF HAGERSTOWN UTILITIES AT LEAST (5) DAYS PRIOR TO THE START OF CONSTRUCTION TO SCHEDULE A PRE-CONSTRUCTION MEETING.

49. STAGE 3
50. INSTALL STABILIZED CONSTRUCTION ENTRANCE SCE-2 AND TEMPORARY CULVERTS UNDER ACCESS DRIVE.
51. INSTALL STABILIZED CONSTURCTION ENTRANCES SCE-3 AND 4.
52. BEGIN CONSTRUCTION OF BUILDINGS 5 AND 6.
53. BEGIN ROUGH GRADE PARKING AREAS AND PLACE STONE SUB-GRADE.
54. REMOVE TEMPORARY SWALE 3 AND INSTALL SWM-2A AND 2B (NOTIFY COUNTY DIVISION OF CONSTRUCTION) ONCE THE UPSTREAM AREAS ARE STABILIZED. INSTALL PIPES EW-2 TO OS-2A AND OUTLET PROTECTION.
55. ONCE THE PARKING AND DRIVEWAY AREAS ARE STABILIZED UPSTREAM OF SEDIMENT TRAP 3, CONVERT TO SWM-1 (NOTIFY COUNTY DIVISION OF CONSTRUCTION) AND BRING OUTLET STRUCTURE TO FINAL TOP OF GRATE ELEVATION.
56. INSTALL SILT FENCE 1B AND 1C.
57. INSTALL BYPASS PIPE HW-BP5 TO MH-BP7 AND OUTLET PROTECTION.
58. INSTALL SWM-5 (NOTIFY COUNTY DIVISION OF CONSTRUCTION) AS SHOWN ON THE PLANS.
59. INSTALL PIPES FROM EW-5A TO MH-5.1 AND OUTLET PROTECTION. REMOVE TEMPORARY PIPES.
60. REMOVE TEMPORARY SEDIMENT TRAP 1. INSTALL SWM-3 (NOTIFY COUNTY DIVISION OF CONSTRUCTION) AND OUTLET PIPES.
61. FINISH ROUGH GRADE PARKING AREAS AND PLACE STONE SUB-GRADE AND INSTALL CURB AND SIDEWALK.
62. BRING PHASE 2 PARKING AREAS AND ACCESS DRIVES TO FINAL GRADE AND PROVIDE FINAL PAVEMENT COURSE. INSTALL ALL ASSOCIATED IMPROVEMENTS WITHIN PARKING AREAS.
63. FINAL GRADE ALL REMAINING AREAS. PERFORM PERMANENT SEEDING AND MULCHING IN ACCORDANCE WITH THE SOIL EROSION, SEDIMENT CONTROL, & SEEDING NOTES AND SUMMARIES.
64. NOTIFY THE WCSCD AT 301-797-6821, AND THE WASHINGTON COUNTY DIVISION OF CONSTRUCTION AT LEAST (5) DAYS PRIOR TO THE REMOVAL OF ANY SOIL EROSION AND SEDIMENT CONTROL FEATURES TO SCHEDULE A FINAL SITE CLOSEOUT REVIEW MEETING
65. VEGETATION MUST MEET THE 95% OVERALL STABILIZATION REQUIREMENT PER THE 2011 MARYLAND STANDARDS AND SPECIFICATIONS FOR SOIL PRIOR TO SCHEDULING SAID MEETING.
66. REMOVE ALL TEMPORARY SEDIMENT CONTROLS AND PERMANENTLY STABILIZE ANY REMAINING AREAS OF SOIL EROSION.

STANDARD UTILITY NOTES

1. CONTRACTOR TO ONLY OPEN UP LENGTH OF TRENCH THAT CAN BE CONSTRCTED AND BACKFILLED IN ONE WORKING DAY IN PAVED AREAS.
2. CONTRACTOR TO PLACE EXCAVATED MATERIALS IN A DUMP TRUCK AND HAUL TO AN APPROVED LOCATION FOR WASTED MATERIALS FROM PAVED AREAS.
3. CONTRACTOR TO BACKFILL TRENCH WITH APPROVED MATERIALS AND STABILIZE DISTURBED AREAS THE SAME WORKING DAY.
4. IN AREAS WHERE THE CONSTRUCTION TAKES PLACE OUTSIDE OF THE EXISTING ROADBED, CONTRACTOR TO INSTALL SILT FENCE ALONG THE DOWNHILL SIDE OF THE TRENCH BEFORE BEGINNING CONSTRUCTION AND PLACE EXCAVATED MATERIAL FROM THE TRENCH ON THE UPHILL SIDE.
5. IF DEWATERING OF THE TRENCH IS REQUIRED, CONTRACTOR TO PUMP WATER TO A FILTER BAG TO DEWATER.
6. CONTRACTOR TO SWEEP STREETS OF ANY DEBRIS OR SEDIMENTS CAUSED BY CONSTRUCTION OPERATIONS AND DISPOSE OF AT AN APPROVED LOCATION.
7. CONTRACTOR TO STABILIZE ALL DISTURBED AREAS WITH SEED & MULCH OR APPROPRIATE STREET REPAIR.

PERMANENT SEEDING SUMMARY

SCOPE: PLANTING PERMANENT, LONG LIVED VEGETATIVE COVER ON GRADED AND/OR CLEARED AREAS AND AREAS THAT HAVE BEEN IN TEMPORARY VEGETATION FOR MORE THAN 6 MONTHS.

STANDARDS: THE FOLLOWING NOTES SHALL CONFORM TO SECTION B-4 ON THE "2011 MARYLAND STANDARDS AND SPECIFICATIONS FOR SOIL EROSION AND SEDIMENT CONTROL" PUBLISHED JOINTLY BY THE MARYLAND DEPARTMENT OF ENVIRONMENT – WATER MANAGEMENT ADMINISTRATION, THE NATIONAL RESOURCE CONSERVATION SERVICE AND THE MARYLAND ASSOCIATION OF SOIL CONSERVATION DISTRICTS.

THE SEED BED SHALL BE PREPARED BY LOOSENING THE SOIL TO A DEPTH OF 3 TO 5 INCHES AND INCORPORATING THE LIME AND FERTILIZER INTO THIS LOOSENED LAYER OF SOIL.

FOR SITES OF 5 AC. OR LESS OF DISTURBANCE, THE FOLLOWING FERTILIZER AND LIME RATES SHALL APPLY. FERTILIZER SHALL CONSIST OF A MIXTURE OF 10-20-20 AND BE APPLIED AT THE FOLLOWING RATES:

N = 45 LB. PER ACRE (1 LB. PER 1000 SQ.FT.)
K20 = 90 LB. PER ACRE (2 LB. PER 1000 SQ.FT.)
LIME SHALL BE APPLIED AT A RATE OF 2 TONS PER ACRE (90 LB. PER 1000 SQ.FT.)

SEED TAGS SHALL BE MADE AVAILABLE TO THE INSPECTOR TO VERIFY THE TYPE OF APPLICATION RATE OF SEED USED. MULCH TYPE AND ITS APPLICATION WILL MEET THE REQUIREMENTS IN SECTION B-4-3 A, B AND C, AND WILL BE APPLIED ALONG WITH SEED OR IMMEDIATELY AFTER SEEDING.

TEMPORARY SEEDING SUMMARY

SCOPE: PLANTING SHORT TERM (NO MORE THAN 6 MONTHS) VEGETATION TO TEMPORARILY STABILIZE ANY AREAS WHERE SOIL DISTURBANCE HAS OCCURRED, UNTIL THE AREA CAN BE PERMANENTLY STABILIZED WITH VEGETATIVE OR NON-VEGETATIVE PRACTICES.

STANDARDS: THE FOLLOWING NOTES SHALL CONFORM TO SECTION B-4 OF THE "2011 MARYLAND STANDARDS AND SPECIFICATIONS FOR SOIL EROSION AND SEDIMENT CONTROL" PUBLISHED JOINTLY BY THE MARYLAND DEPARTMENT OF ENVIRONMENT – WATER MANAGEMENT ADMINISTRATION, THE NATIONAL RESOURCE CONSERVATION SERVICE AND THE MARYLAND ASSOCIATION OF SOIL CONSERVATION DISTRICTS.

THE SEED BED SHALL BE PREPARED BY LOOSENING THE SOIL TO A DEPTH OF 3 TO 5 INCHES AND INCORPORATING THE LIME AND FERTILIZER INTO THIS LOOSENED LAYER OF SOIL.

FOR TEMPORARY STABILIZATION, FERTILIZER SHALL CONSIST OF A MIXTURE OF 10-20-20 AND BE APPLIED AT A RATE OF 436 LB. PER ACRE (10 LB PER 1000 SQ. FT.) AND WILL MEET THE REQUIREMENTS IN SECTION B-4-2. LIME SHALL BE APPLIED AT A RATE OF 2 TONS PER ACRE (90 LB. PER SQ. FT.) AND SHALL MEET THE REQUIREMENTS IN SECTION B-4-2 AND B-4-4.

SEED TAGS SHALL BE MADE AVAILABLE TO THE INSPECTOR TO VERIFY THE TYPE AND RATE OF SEED USED. MULCH TYPE AND ITS APPLICATION WILL MEET THE REQUIREMENTS IN SECTION B-4-3 A, B AND C AND WILL BE APPLIED ALONG WITH THE SEED OR IMMEDIATELY AFTER SEEDING.

Temporary Seeding Summary

Hardiness Zone (Figure B.3) Seed Mixture					Fertilizer Rate (10-20-20)	Lime Rate
No.	Species	Application Rate(lb/ac)	Seeding Dates	Seeding Depths		
	BARLEY (HARLEUM VULGARE)	96 LB/AC OR 2.2 LB 1,000 SF	03/15 TO 05/31 & 08/01 TO 10/15	1.0 INCHES	436 LB/AC (10 LB/1,000 SF)	2 TONS/AC (10 LB/1,000 SF)

Permanent Seeding Summary

Hardiness Zone (Figure B.3) Seed Mixture					Fertilizer Rate (10-20-20)			Lime Rate
No.	Species	Application Rate (lb/ac)	Seeding Dates	Seeding Depths	N	P205	K20	
6	TALL FESCUE (LADY ARUNDINOCEU)	40 LB/AC.	03/01 TO 05/31 & 08/01 TO 10/15	1/4 - 1/2 Inches	45 lb/ac. (1 lb/1000 s.f.)	90 lb/ac. (2 lb/1000 s.f.)	90 lb/ac. (2 lb/1000 s.f.)	2 tons/ac. (90 lb/1000 s.f.)
6	PERENNIAL RYGRASS (LOLLUM PERANNE)	25 LB/AC.		1/4 - 1/2 Inches				
6	WHITE CLOVER (TRIFOLLIUM RAPENS)	5 LB/AC.		1/4 - 1/2 Inches				

HRG
HERBERT, ROWLAND & GRUBIC, INC.
5 NORTH MAIN STREET
SUITE 3
CHAMBERSBURG, PA 17201
717. 263.2070 | hrg-inc.com

SITE PLAN
FOR
MERITUS SCHOOL OF OSTEOPATHIC MEDICINE
GRADUATE STUDENT HOUSING
1500 MT. AETNA ROAD
HAGERSTOWN, MD 21742
TAX MAP-50 GRID: 14 PARCEL: 1207
HAGERSTOWN WASHINGTON COUNTY MARYLAND

PROFESSIONAL CERTIFICATION:

STATE OF MARYLAND
SCOTT BERG
59144
PROFESSIONAL ENGINEER

I HEREBY CERTIFY THAT THESE DOCUMENTS WERE PREPARED OR APPROVED BY ME, AND THAT I AM DULY LICENSED PROFESSIONAL ENGINEER UNDER THE LAWS OF THE STATE OF MARYLAND. LICENSE NO. 59144, EXP. DATE: 2024-03-29

HRG PROJECT NUMBER:	R003887.0427
PLAN DATE:	2023.09.01
DRAWING SCALE:	AS SHOWN
PROJ. MANAGER:	SBB

REVISIONS

NO.	DATE	DESCRIPTION
1	2024.01.16	PER VARIOUS REVIEW AGENCY COMMENTS
2		
3		
4		
5		
6		
7		
8		
9		

SHEET TITLE:
E&S CONTROL NOTES & DETAILS

SP-23-034

SHEET: CD-10

DETAIL B-1 STABILIZED CONSTRUCTION ENTRANCE

STANDARD SYMBOL: SCE

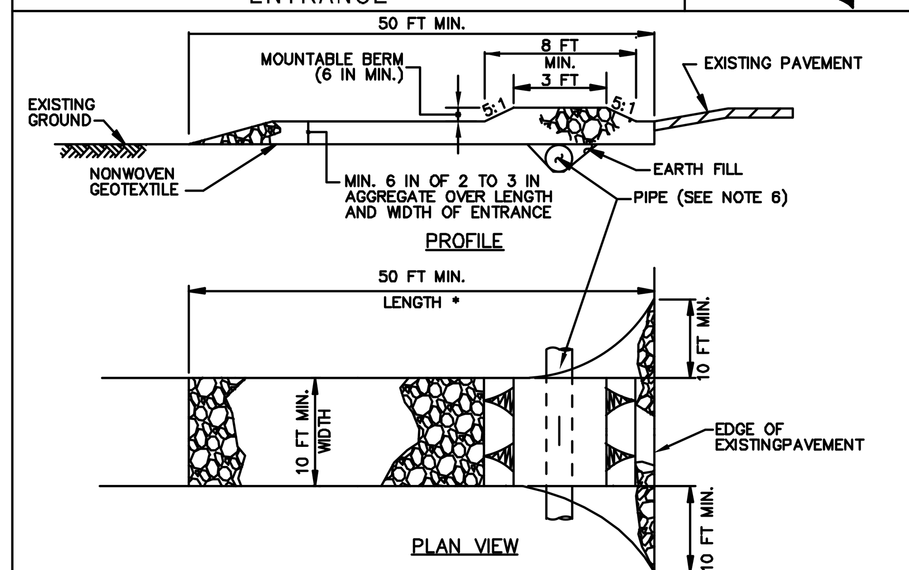

CONSTRUCTION SPECIFICATIONS

1. PLACE STABILIZED CONSTRUCTION ENTRANCE IN ACCORDANCE WITH THE APPROVED PLAN. VEHICLES MUST TRAVEL OVER THE ENTIRE LENGTH OF THE SCE. USE MINIMUM LENGTH OF 50 FEET (*30 FEET FOR SINGLE RESIDENCE LOT). USE MINIMUM WIDTH OF 10 FEET. FLARE SCE 10 FEET MINIMUM AT THE EXISTING ROAD TO PROVIDE A TURNING RADIUS.
2. PIPE ALL SURFACE WATER FLOWING TO OR DIVERTED TOWARD THE SCE UNDER THE ENTRANCE, MAINTAINING POSITIVE DRAINAGE. PROTECT PIPE INSTALLED THROUGH THE SCE WITH A MOUNTABLE BERM WITH 5:1 SLOPES AND A MINIMUM OF 12 INCHES OF STONE OVER THE PIPE. PROVIDE PIPE AS SPECIFIED ON APPROVED PLAN. WHEN THE SCE IS LOCATED AT A HIGH SPOT AND HAS NO DRAINAGE TO CONVEY, A PIPE IS NOT NECESSARY. A MOUNTABLE BERM IS REQUIRED WHEN SCE IS NOT LOCATED AT A HIGH SPOT.
3. PREPARE SUBGRADE AND PLACE NONWOVEN GEOTEXTILE, AS SPECIFIED IN SECTION H-1 MATERIALS.
4. PLACE CRUSHED AGGREGATE (2 TO 3 INCHES IN SIZE) OR EQUIVALENT RECYCLED CONCRETE (WITHOUT REBAR) AT LEAST 6 INCHES DEEP OVER THE LENGTH AND WIDTH OF THE SCE.
5. MAINTAIN ENTRANCE IN A CONDITION THAT MINIMIZES TRACKING OF SEDIMENT. ADD STONE OR MAKE OTHER REPAIRS AS CONDITIONS DEMAND TO MAINTAIN CLEAN SURFACE, MOUNTABLE BERM, AND SPECIFIED DIMENSIONS. IMMEDIATELY REMOVE STONE AND/OR SEDIMENT SPILLED, DROPPED, OR TRACKED ONTO ADJACENT ROADWAY BY VACUUMING, SCRAPING, AND/OR SWEEPING. WASHING ROADWAY TO REMOVE MUD TRACKED ONTO PAVEMENT IS NOT ACCEPTABLE UNLESS WASH WATER IS DIRECTED TO AN APPROVED SEDIMENT CONTROL PRACTICE.

MARYLAND STANDARDS AND SPECIFICATIONS FOR SOIL EROSION AND SEDIMENT CONTROL

U.S. DEPARTMENT OF AGRICULTURE NATURAL RESOURCES CONSERVATION SERVICE	2011	MARYLAND DEPARTMENT OF ENVIRONMENT WATER MANAGEMENT ADMINISTRATION

DETAIL B-2 WASH RACK OPTION

STANDARD SYMBOL: WR

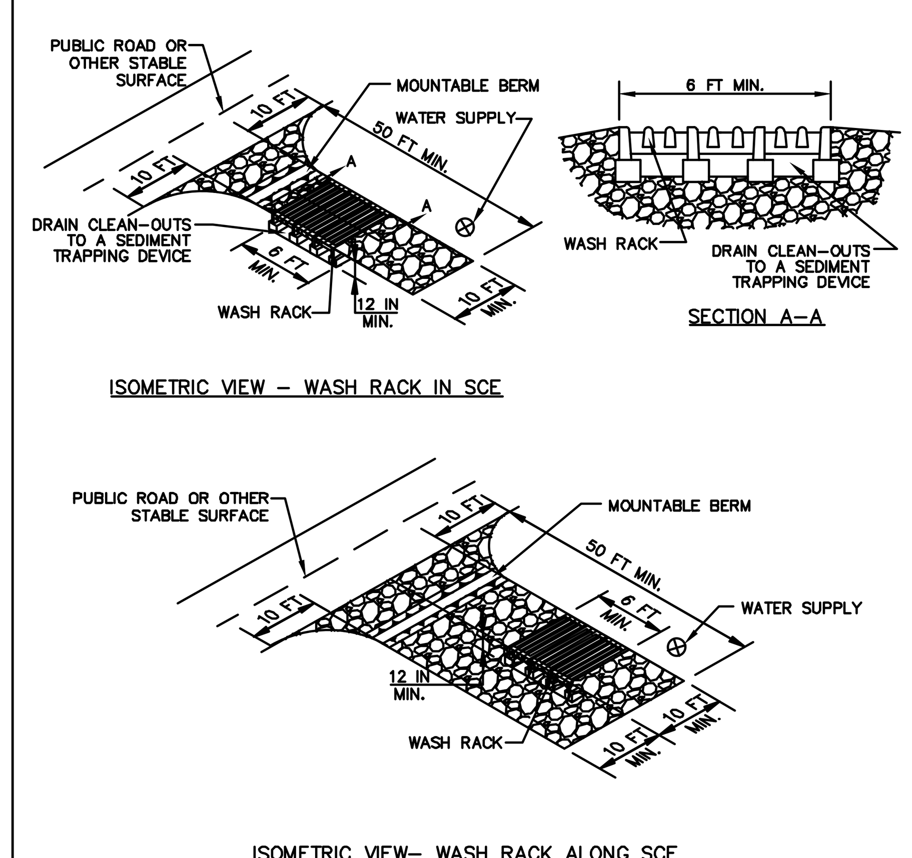

CONSTRUCTION SPECIFICATIONS

1. USE A WASH RACK DESIGNED AND CONSTRUCTED/MANUFACTURED FOR THE ANTICIPATED TRAFFIC LOADS. CONCRETE, STEEL, OR OTHER MATERIALS ARE ACCEPTABLE. PRE-FABRICATED UNITS SUCH AS CATTLE GUARDS ARE ACCEPTABLE. USE MINIMUM DIMENSION OF 6 FEET x 10 FEET. ORIENT DIRECTION OF RIBS AS SHOWN ON THE DETAIL.
2. INSTALL PRIOR TO, ALONG SIDE OF, OR AS PART OF THE SCE.
3. DIRECT WASH WATER TO AN APPROVED SEDIMENT TRAPPING DEVICE.
4. KEEP AREA UNDER WASH RACK FREE OF ACCUMULATED SEDIMENT. IF DAMAGED, REPAIR OR REPLACE WASH RACK.

MARYLAND STANDARDS AND SPECIFICATIONS FOR SOIL EROSION AND SEDIMENT CONTROL

U.S. DEPARTMENT OF AGRICULTURE NATURAL RESOURCES CONSERVATION SERVICE	2011	MARYLAND DEPARTMENT OF ENVIRONMENT WATER MANAGEMENT ADMINISTRATION

DETAIL B-4-6-A TEMPORARY SOIL STABILIZATION MATTING CHANNEL APPLICATION

STANDARD SYMBOL: TSSMC – * lb/ft² (* INCLUDE SHEAR STRESS)

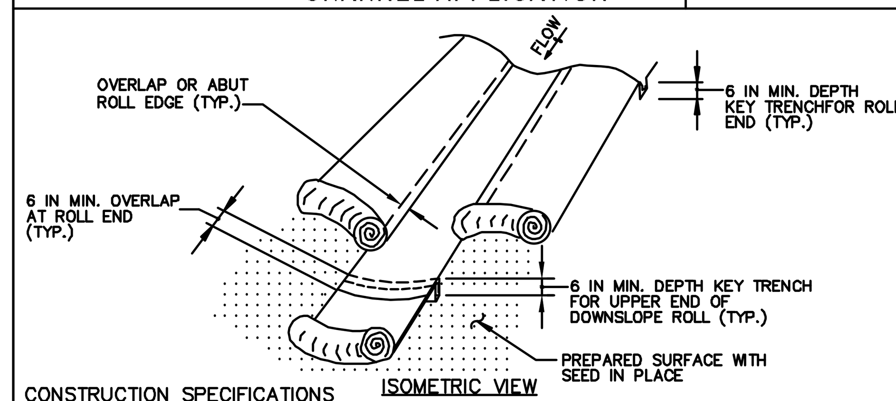

CONSTRUCTION SPECIFICATIONS

1. USE MATTING THAT HAS A DESIGN VALUE FOR SHEAR STRESS EQUAL TO OR HIGHER THAN THE SHEAR STRESS DESIGNATED ON APPROVED PLANS.
2. USE TEMPORARY SOIL STABILIZATION MATTING MADE OF DEGRADABLE (LASTS 6 MONTHS MINIMUM) NATURAL OR MAN-MADE FIBERS (MOSTLY ORGANIC). MAT MUST HAVE UNIFORM THICKNESS AND DISTRIBUTION OF FIBERS THROUGHOUT AND BE SMOLDER RESISTANT. CHEMICALS USED IN THE MAT MUST BE NON-LEACHING AND NON-TOXIC TO VEGETATION AND SEED GERMINATION AND NON-INJURIOUS TO THE SKIN. IF PRESENT, NETTING MUST BE EXTRUDED PLASTIC WITH A MAXIMUM MESH OPENING OF 2x2 INCHES AND SUFFICIENTLY BONDED OR SEWN ON 2 INCH CENTERS ALONG LONGITUDINAL AXIS OF THE MATERIAL TO PREVENT SEPARATION OF THE NET FROM THE PARENT MATERIAL.
3. SECURE MATTING USING STEEL STAPLES, WOOD STAKES, OR BIODEGRADABLE EQUIVALENT. STAPLES MUST BE "U" OR "T" SHAPED STEEL WIRE HAVING A MINIMUM GAUGE OF NO. 11 AND NO. 8 RESPECTIVELY. "U" SHAPED STAPLES MUST AVERAGE 1 TO 1½ INCHES WIDE AND BE A MINIMUM OF 6 INCHES LONG. "T" SHAPED STAPLES MUST HAVE A MINIMUM 8 INCH MAIN LEG, A MINIMUM 1 INCH SECONDARY LEG, AND A MINIMUM 4 INCH HEAD. WOOD STAKES MUST BE ROUGH-SAWN HARDWOOD, 12 TO 24 INCHES IN LENGTH, 1x3 INCH IN CROSS SECTION, AND WEDGE SHAPED AT THE BOTTOM.
4. PERFORM FINAL GRADING, TOPSOIL APPLICATION, SEEDBED PREPARATION, AND PERMANENT SEEDING IN ACCORDANCE WITH SPECIFICATIONS. PLACE MATTING WITHIN 48 HOURS OF COMPLETING SEEDING OPERATIONS UNLESS END OF WORKDAY STABILIZATION IS SPECIFIED ON THE APPROVED EROSION AND SEDIMENT CONTROL PLAN.
5. UNROLL MATTING IN DIRECTION OF WATER FLOW, CENTERING THE FIRST ROLL ON THE CHANNEL CENTERLINE. WORK FROM CENTER OF CHANNEL OUTWARD WHEN PLACING ROLLS. LAY MAT SMOOTHLY AND FIRMLY ON THE SEEDED SURFACE. AVOID STRETCHING THE MATTING.
6. KEY-IN UPSTREAM END OF EACH MAT ROLL BY DIGGING A 6 INCH (MINIMUM) TRENCH AT THE UPSTREAM END OF THE MATTING, PLACING THE ROLL END IN THE TRENCH, STAPLING THE MAT IN PLACE, REPLACING THE EXCAVATED MATERIAL, AND TAMPING TO SECURE THE MAT END.
7. OVERLAP OR ABUT THE ROLL EDGES PER MANUFACTURER RECOMMENDATIONS. OVERLAP ROLL ENDS BY 6 INCHES (MINIMUM), WITH THE UPSTREAM MAT OVERLAPPING ON TOP OF THE NEXT DOWNSTREAM MAT.
8. STAPLE/STAKE MAT IN A STAGGERED PATTERN ON 4 FOOT (MAXIMUM) CENTERS THROUGHOUT AND 2 FOOT (MAXIMUM) CENTERS ALONG SEAMS, JOINTS, AND ROLL ENDS.
9. ESTABLISH AND MAINTAIN VEGETATION SO THAT REQUIREMENTS FOR ADEQUATE VEGETATIVE ESTABLISHMENT ARE CONTINUOUSLY MET IN ACCORDANCE WITH SECTION B-4 VEGETATIVE STABILIZATION.

MARYLAND STANDARDS AND SPECIFICATIONS FOR SOIL EROSION AND SEDIMENT CONTROL

U.S. DEPARTMENT OF AGRICULTURE NATURAL RESOURCES CONSERVATION SERVICE	2011	MARYLAND DEPARTMENT OF ENVIRONMENT WATER MANAGEMENT ADMINISTRATION

DETAIL B-4-6-B TEMPORARY SOIL STABILIZATION MATTING SLOPE APPLICATION

STANDARD SYMBOL: TSSMS – * lb/ft² (* INCLUDE SHEAR STRESS)

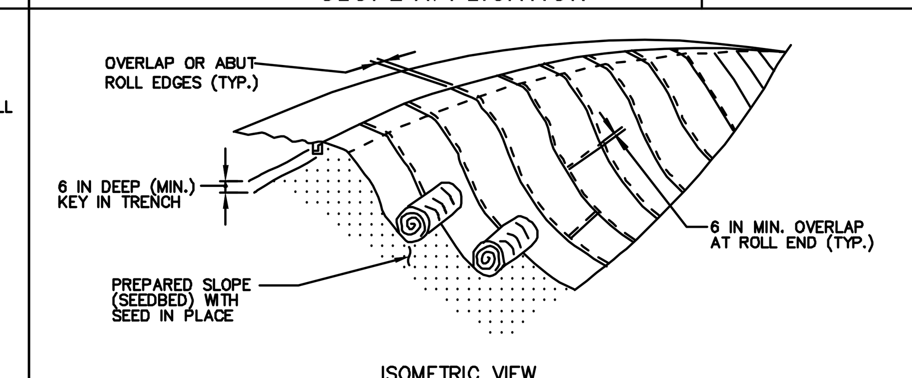

CONSTRUCTION SPECIFICATIONS

1. USE MATTING THAT HAS A DESIGN VALUE FOR SHEAR STRESS EQUAL TO OR HIGHER THAN THE SHEAR STRESS DESIGNATED ON APPROVED PLANS.
2. USE TEMPORARY SOIL STABILIZATION MATTING MADE OF DEGRADABLE (LASTS 6 MONTHS MINIMUM) NATURAL OR MAN-MADE FIBERS (MOSTLY ORGANIC). MAT MUST HAVE UNIFORM THICKNESS AND DISTRIBUTION OF FIBERS THROUGHOUT AND BE SMOLDER RESISTANT. CHEMICALS USED IN THE MAT MUST BE NON-LEACHING AND NON-TOXIC TO VEGETATION AND SEED GERMINATION AND NON-INJURIOUS TO THE SKIN. IF PRESENT, NETTING MUST BE EXTRUDED PLASTIC WITH A MAXIMUM MESH OPENING OF 2x2 INCHES AND SUFFICIENTLY BONDED OR SEWN ON 2 INCH CENTERS ALONG LONGITUDINAL AXIS OF THE MATERIAL TO PREVENT SEPARATION OF THE NET FROM THE PARENT MATERIAL.
3. SECURE MATTING USING STEEL STAPLES, WOOD STAKES, OR BIODEGRADABLE EQUIVALENT. STAPLES MUST BE "U" OR "T" SHAPED STEEL WIRE HAVING A MINIMUM GAUGE OF NO. 11 AND NO. 8 RESPECTIVELY. "U" SHAPED STAPLES MUST AVERAGE 1 TO 1½ INCHES WIDE AND BE A MINIMUM OF 6 INCHES LONG. "T" SHAPED STAPLES MUST HAVE A MINIMUM 8 INCH MAIN LEG, A MINIMUM 1 INCH SECONDARY LEG, AND A MINIMUM 4 INCH HEAD. WOOD STAKES MUST BE ROUGH-SAWN HARDWOOD, 12 TO 24 INCHES IN LENGTH, 1x3 INCH IN CROSS SECTION, AND WEDGE SHAPED AT THE BOTTOM.
4. PERFORM FINAL GRADING, TOPSOIL APPLICATION, SEEDBED PREPARATION, AND PERMANENT SEEDING IN ACCORDANCE WITH SPECIFICATIONS. PLACE MATTING WITHIN 48 HOURS OF COMPLETING SEEDING OPERATIONS UNLESS END OF WORKDAY STABILIZATION IS SPECIFIED ON THE APPROVED EROSION & SEDIMENT CONTROL PLAN.
5. UNROLL MATTING DOWNSLOPE. LAY MAT SMOOTHLY AND FIRMLY UPON THE SEEDED SURFACE. AVOID STRETCHING THE MATTING.
6. OVERLAP OR ABUT ROLL EDGES PER MANUFACTURER RECOMMENDATIONS. OVERLAP ROLL ENDS BY 6 INCHES (MINIMUM), WITH THE UPSLOPE MAT OVERLAPPING ON TOP OF THE DOWNSLOPE MAT.
7. KEY IN THE UPSLOPE END OF MAT 6 INCHES (MINIMUM) BY DIGGING A TRENCH, PLACING THE MATTING ROLL END IN THE TRENCH, STAPLING THE MAT IN PLACE, REPLACING THE EXCAVATED MATERIAL, AND TAMPING TO SECURE THE MAT END IN THE KEY.
8. STAPLE/STAKE MAT IN A STAGGERED PATTERN ON 4 FOOT (MAXIMUM) CENTERS THROUGHOUT AND 2 FOOT (MAXIMUM) CENTERS ALONG SEAMS, JOINTS, AND ROLL ENDS.
9. ESTABLISH AND MAINTAIN VEGETATION SO THAT REQUIREMENTS FOR ADEQUATE VEGETATIVE ESTABLISHMENT ARE CONTINUOUSLY MET IN ACCORDANCE WITH SECTION B-4 VEGETATIVE STABILIZATION.

MARYLAND STANDARDS AND SPECIFICATIONS FOR SOIL EROSION AND SEDIMENT CONTROL

U.S. DEPARTMENT OF AGRICULTURE NATURAL RESOURCES CONSERVATION SERVICE	2011	MARYLAND DEPARTMENT OF ENVIRONMENT WATER MANAGEMENT ADMINISTRATION

DETAIL B-4-6-C PERMANENT SOIL STABILIZATION MATTING CHANNEL APPLICATION

STANDARD SYMBOL: PSSMC – * lb/ft² (* INCLUDE SHEAR STRESS)

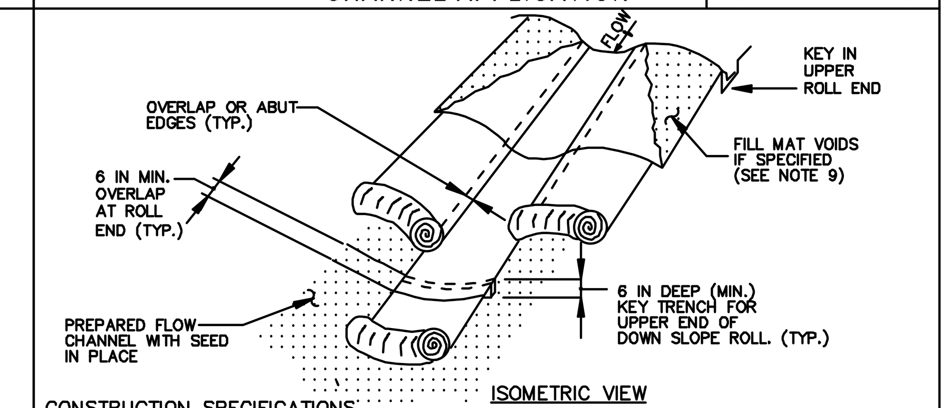

CONSTRUCTION SPECIFICATIONS

1. USE MATTING THAT HAS A DESIGN VALUE FOR SHEAR STRESS EQUAL TO OR HIGHER THAN THE SHEAR STRESS DESIGNATED ON APPROVED PLANS.
2. USE PERMANENT SOIL STABILIZATION MATTING MADE OF OPEN WEAVE SYNTHETIC, NON-DEGRADABLE FIBERS OR ELEMENTS OF UNIFORM THICKNESS AND DISTRIBUTION THROUGHOUT. CHEMICALS USED IN THE MAT MUST BE NON-LEACHING AND NON-TOXIC TO VEGETATION AND SEED GERMINATION AND NON-INJURIOUS TO THE SKIN. IF PRESENT, NETTING MUST BE EXTRUDED PLASTIC WITH A MAXIMUM MESH OPENING OF 2x2 INCHES AND SUFFICIENTLY BONDED OR SEWN ON 2 INCH CENTERS ALONG LONGITUDINAL AXIS OF THE MATERIAL TO PREVENT SEPARATION OF THE NET FROM THE PARENT MATERIAL.
3. SECURE MATTING USING STEEL STAPLES OR WOOD STAKES. STAPLES MUST BE "U" OR "T" SHAPED STEEL WIRE HAVING A MINIMUM GAUGE OF NO. 11 AND NO. 8 RESPECTIVELY. "U" SHAPED STAPLES MUST AVERAGE 1 TO 1 ½ INCHES WIDE AND BE A MINIMUM OF 6 INCHES LONG. "T" SHAPED STAPLES MUST HAVE A MINIMUM 8 INCH MAIN LEG, A MINIMUM 1 INCH SECONDARY LEG, AND MINIMUM 4 INCH HEAD. WOOD STAKES MUST BE ROUGH-SAWN HARDWOOD, 12 TO 24 INCHES IN LENGTH, 1x3 INCH IN CROSS SECTION, AND WEDGE SHAPE AT THE BOTTOM.
4. PERFORM FINAL GRADING, TOPSOIL APPLICATION, SEEDBED PREPARATION, AND PERMANENT SEEDING IN ACCORDANCE WITH SPECIFICATIONS. PLACE MATTING WITHIN 48 HOURS OF COMPLETING SEEDING OPERATIONS, UNLESS END OF WORKDAY STABILIZATION IS SPECIFIED ON THE APPROVED EROSION AND SEDIMENT CONTROL PLAN.
5. UNROLL MATTING IN DIRECTION OF WATER FLOW, CENTERING THE FIRST ROLL ON THE CHANNEL CENTER LINE. WORK FROM CENTER OF CHANNEL OUTWARD WHEN PLACING ROLLS. LAY MATTING SMOOTHLY AND FIRMLY UPON THE SEEDED SURFACE. AVOID STRETCHING THE MATTING.
6. OVERLAP OR ABUT EDGES OF MATTING ROLLS PER MANUFACTURER RECOMMENDATIONS. OVERLAP ROLL ENDS BY 6 INCHES (MINIMUM), WITH THE UPSTREAM MAT OVERLAPPING ON TOP OF THE NEXT DOWNSTREAM MAT.
7. KEY IN THE TOP OF SLOPE END OF MAT 6 INCHES (MINIMUM) BY DIGGING A TRENCH, PLACING THE MATTING ROLL END IN THE TRENCH, STAPLING THE MAT IN PLACE, REPLACING THE EXCAVATED MATERIAL, AND TAMPING TO SECURE THE MAT END IN THE KEY.
8. STAPLE/STAKE MAT IN A STAGGERED PATTERN ON 4 FOOT (MAXIMUM) CENTERS THROUGHOUT AND 2 FOOT (MAXIMUM) CENTERS ALONG SEAMS, JOINTS, AND ROLL ENDS.
9. IF SPECIFIED BY THE DESIGNER OR MANUFACTURER AND DEPENDING ON THE TYPE OF MAT BEING INSTALLED, ONCE THE MATTING IS KEYED AND STAPLED IN PLACE, FILL THE MAT VOIDS WITH TOP SOIL OR GRANULAR MATERIAL AND LIGHTLY COMPACT OR ROLL TO MAXIMIZE SOIL/MAT CONTACT WITHOUT CRUSHING MAT.
10. ESTABLISH AND MAINTAIN VEGETATION SO THAT REQUIREMENTS FOR ADEQUATE VEGETATIVE ESTABLISHMENT ARE CONTINUOUSLY MET IN ACCORDANCE WITH SECTION B-4 VEGETATIVE STABILIZATION.

MARYLAND STANDARDS AND SPECIFICATIONS FOR SOIL EROSION AND SEDIMENT CONTROL

U.S. DEPARTMENT OF AGRICULTURE NATURAL RESOURCES CONSERVATION SERVICE	2011	MARYLAND DEPARTMENT OF ENVIRONMENT WATER MANAGEMENT ADMINISTRATION

DETAIL B-4-6-D PERMANENT SOIL STABILIZATION MATTING SLOPE APPLICATION

STANDARD SYMBOL: PSSMS – * lb/ft² (* INCLUDE SHEAR STRESS)

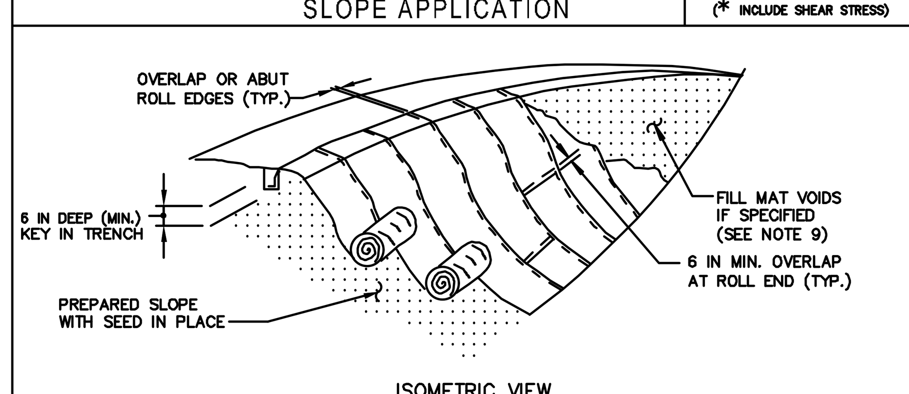

CONSTRUCTION SPECIFICATIONS

1. USE MATTING THAT HAS A DESIGN VALUE FOR SHEAR STRESS EQUAL TO OR HIGHER THAN THE SHEAR STRESS DESIGNATED ON APPROVED PLANS.
2. USE PERMANENT SOIL STABILIZATION MATTING MADE OF OPEN WEAVE SYNTHETIC, NON-DEGRADABLE FIBERS OR ELEMENTS OF UNIFORM THICKNESS AND DISTRIBUTION THROUGHOUT. CHEMICALS USED IN THE MAT MUST BE NON-LEACHING AND NON-TOXIC TO VEGETATION AND SEED GERMINATION AND NON-INJURIOUS TO THE SKIN. IF PRESENT, NETTING MUST BE EXTRUDED PLASTIC WITH A MAXIMUM MESH OPENING OF 2x2 INCHES AND SUFFICIENTLY BONDED OR SEWN ON 2 INCH CENTERS ALONG LONGITUDINAL AXIS OF THE MATERIAL TO PREVENT SEPARATION OF THE NET FROM THE PARENT MATERIAL.
3. SECURE MATTING USING STEEL STAPLES OR WOOD STAKES. STAPLES MUST BE "U" OR "T" SHAPED STEEL WIRE HAVING A MINIMUM GAUGE OF NO. 11 AND NO. 8 RESPECTIVELY. "U" SHAPED STAPLES MUST AVERAGE 1 TO 1½ INCHES WIDE AND BE A MINIMUM OF 6 INCHES LONG. "T" SHAPED STAPLES MUST HAVE A MINIMUM 8 INCH MAIN LEG, A MINIMUM 1 INCH SECONDARY LEG, AND MINIMUM 4 INCH HEAD. WOOD STAKES MUST BE ROUGH-SAWN HARDWOOD, 12 TO 24 INCHES IN LENGTH, 1x3 INCH IN CROSS SECTION, AND WEDGE SHAPE AT THE BOTTOM.
4. PERFORM FINAL GRADING, TOPSOIL APPLICATION, SEEDBED PREPARATION, AND PERMANENT SEEDING IN ACCORDANCE WITH SPECIFICATIONS. PLACE MATTING WITHIN 48 HOURS OF COMPLETING SEEDING OPERATIONS, UNLESS END OF WORKDAY STABILIZATION IS SPECIFIED ON THE APPROVED EROSION AND SEDIMENT CONTROL PLAN.
5. UNROLL MATTING DOWN SLOPE. LAY MATTING SMOOTHLY AND FIRMLY UPON THE SEEDED SURFACE. AVOID STRETCHING THE MATTING.
6. OVERLAP OR ABUT EDGES OF MATTING ROLLS PER MANUFACTURER RECOMMENDATIONS. OVERLAP ROLL ENDS BY 6 INCHES (MINIMUM), WITH THE UPSTREAM MAT OVERLAPPING ON TOP OF THE DOWNSLOPE MAT.
7. KEY IN THE TOP OF SLOPE END OF MAT 6 INCHES (MINIMUM) BY DIGGING A TRENCH, PLACING THE MATTING ROLL END IN THE TRENCH, STAPLING THE MAT IN PLACE, REPLACING THE EXCAVATED MATERIAL, AND TAMPING TO SECURE THE MAT END IN THE KEY.
8. STAPLE/STAKE MAT IN A STAGGERED PATTERN ON 4 FOOT (MAXIMUM) CENTERS THROUGHOUT AND 2 FOOT (MAXIMUM) CENTERS ALONG SEAMS, JOINTS, AND ROLL ENDS.
9. IF SPECIFIED BY THE DESIGNER OR MANUFACTURER AND DEPENDING ON THE TYPE OF MAT BEING INSTALLED, ONCE THE MATTING IS KEYED AND STAPLED IN PLACE, FILL THE MAT VOIDS WITH TOP SOIL OR GRANULAR MATERIAL AND LIGHTLY COMPACT OR ROLL TO MAXIMIZE SOIL/MAT CONTACT WITHOUT CRUSHING MAT.
10. ESTABLISH AND MAINTAIN VEGETATION SO THAT REQUIREMENTS FOR ADEQUATE VEGETATIVE ESTABLISHMENT ARE CONTINUOUSLY MET IN ACCORDANCE WITH SECTION B-4 VEGETATIVE STABILIZATION.

MARYLAND STANDARDS AND SPECIFICATIONS FOR SOIL EROSION AND SEDIMENT CONTROL

U.S. DEPARTMENT OF AGRICULTURE NATURAL RESOURCES CONSERVATION SERVICE	2011	MARYLAND DEPARTMENT OF ENVIRONMENT WATER MANAGEMENT ADMINISTRATION

DETAIL C-2 TEMPORARY SWALE

STANDARD SYMBOL: A-1

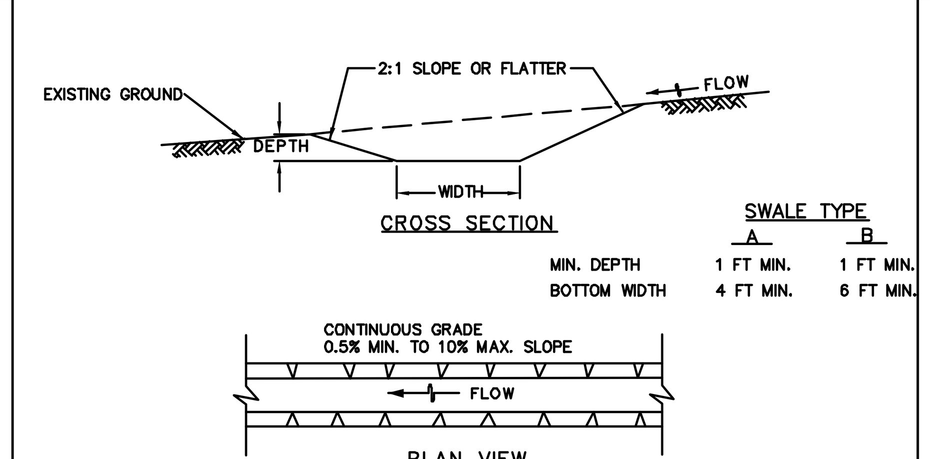

	SWALE TYPE A	SWALE TYPE B
MIN. DEPTH	1 FT MIN.	1 FT MIN.
BOTTOM WIDTH	4 FT MIN.	6 FT MIN.

FLOW CHANNEL STABILIZATION

A-1 SEED WITH STRAW MULCH AND TACK. (NOT ALLOWED FOR CLEAR WATER DIVERSION.)

A-2/B-2 SEED WITH SOIL STABILIZATION MATTING OR LINE WITH SOD.

A-3/B-3 4 TO 7 INCH STONE OR EQUIVALENT RECYCLED CONCRETE PRESSED INTO SOIL A MINIMUM OF 7 INCHES AND FLUSH WITH GROUND.

CONSTRUCTION SPECIFICATIONS

1. REMOVE AND DISPOSE OF ALL TREES, BRUSH, STUMPS, OBSTRUCTIONS, AND OTHER OBJECTIONABLE MATERIAL SO AS NOT TO INTERFERE WITH PROPER FUNCTION OF TEMPORARY SWALE.
2. EXCAVATE OR SHAPE TEMPORARY SWALE TO LINE, GRADE, AND CROSS SECTION AS SPECIFIED. BANK PROJECTIONS OR OTHER IRREGULARITIES ARE NOT ALLOWED.
3. STABILIZE TEMPORARY SWALE WITHIN THREE DAYS OF INSTALLATION. STABILIZE SWALES USED FOR CLEAR WATER DIVERSION WITHIN 24 HOURS OF INSTALLATION.
4. CONSTRUCT FLOW CHANNEL ON AN UNINTERRUPTED, CONTINUOUS GRADE, ADJUSTING THE LOCATION DUE TO FIELD CONDITIONS AS NECESSARY TO MAINTAIN POSITIVE DRAINAGE.
5. PROVIDE OUTLET PROTECTION AS REQUIRED ON APPROVED PLAN.
6. MAINTAIN LINE, GRADE, AND CROSS SECTION. REMOVE ACCUMULATED SEDIMENT AND DEBRIS, AND MAINTAIN POSITIVE DRAINAGE. KEEP TEMPORARY SWALE AND POINT OF DISCHARGE FREE OF EROSION, AND CONTINUOUSLY MEET REQUIREMENTS FOR ADEQUATE VEGETATIVE ESTABLISHMENT IN ACCORDANCE WITH SECTION B-4 VEGETATIVE STABILIZATION.
7. UPON REMOVAL OF TEMPORARY SWALE, GRADE AREA FLUSH WITH EXISTING GROUND. WITHIN 24 HOURS OF REMOVAL STABILIZE DISTURBED AREA WITH TOPSOIL, SEED, AND MULCH, OR AS SPECIFIED ON APPROVED PLAN.

MARYLAND STANDARDS AND SPECIFICATIONS FOR SOIL EROSION AND SEDIMENT CONTROL

U.S. DEPARTMENT OF AGRICULTURE NATURAL RESOURCES CONSERVATION SERVICE	2011	MARYLAND DEPARTMENT OF ENVIRONMENT WATER MANAGEMENT ADMINISTRATION

DETAIL D-3-2 GABION INFLOW PROTECTION

STANDARD SYMBOL: GP

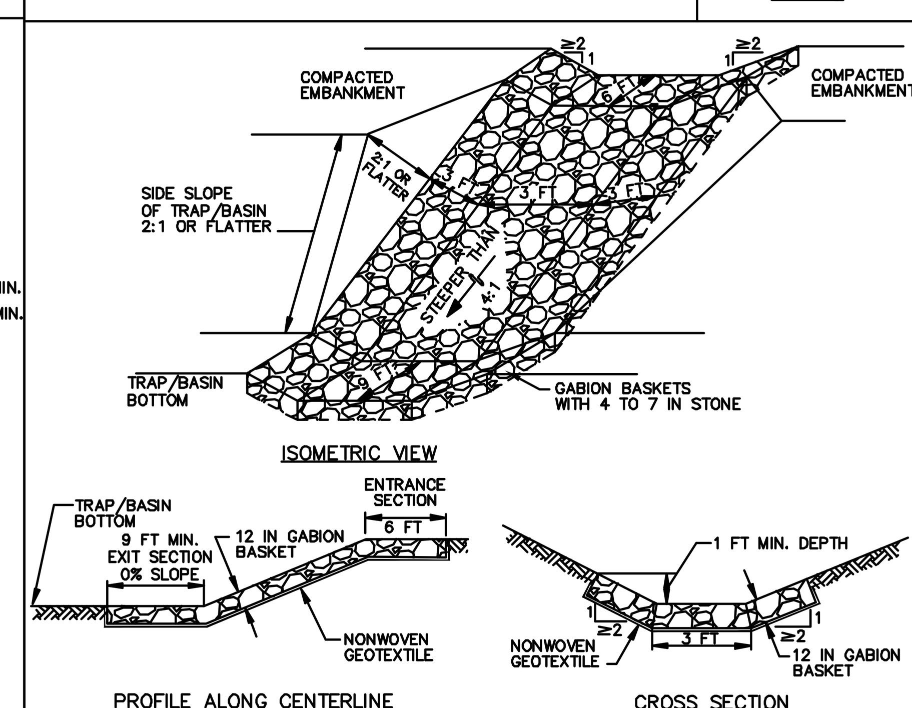

CONSTRUCTION SPECIFICATIONS

1. PROVIDE NONWOVEN GEOTEXTILE, AS SPECIFIED IN SECTION H-1 MATERIALS, UNDER THE BOTTOM AND ALONG SIDES OF ALL GABION BASKETS.
2. USE BASKETS MADE OF MINIMUM 11 GAUGE WIRE.
3. CONSTRUCT GABION INFLOW PROTECTION BY ARRANGING 9 X 3 X 1 FOOT GABION BASKETS TO FORM A TRAPEZOIDAL SECTION WITH A 3 FOOT BOTTOM WIDTH, 1 FOOT MINIMUM DEPTH, 3 FOOT SIDE WALLS, AND 2:1 OR FLATTER SIDE SLOPES. FILL GABION BASKETS WITH 4 TO 7 INCH STONE OR EQUIVALENT RECYCLED CONCRETE WITHOUT REBAR OR WEIR MESH.
4. INSTALL ENTRANCE AND EXIT SECTIONS AS SHOWN ON THE PROFILE.
5. INSTALL GABIONS IN ACCORDANCE WITH MANUFACTURER RECOMMENDATIONS.
6. BLEND GABIONS INTO EXISTING GROUND.
7. MAINTAIN LINE, GRADE, AND CROSS SECTION. REMOVE ACCUMULATED SEDIMENT AND DEBRIS. KEEP POINTS OF INFLOW AND OUTFLOW FREE OF EROSION

MARYLAND STANDARDS AND SPECIFICATIONS FOR SOIL EROSION AND SEDIMENT CONTROL

U.S. DEPARTMENT OF AGRICULTURE NATURAL RESOURCES CONSERVATION SERVICE	2011	MARYLAND DEPARTMENT OF ENVIRONMENT WATER MANAGEMENT ADMINISTRATION

DETAIL E-9-1 STANDARD INLET PROTECTION

STANDARD SYMBOL: SIP

TYPE A MAXIMUM DRAINAGE AREA = ¼ ACRE
TYPE B MAXIMUM DRAINAGE AREA = 1 ACRE

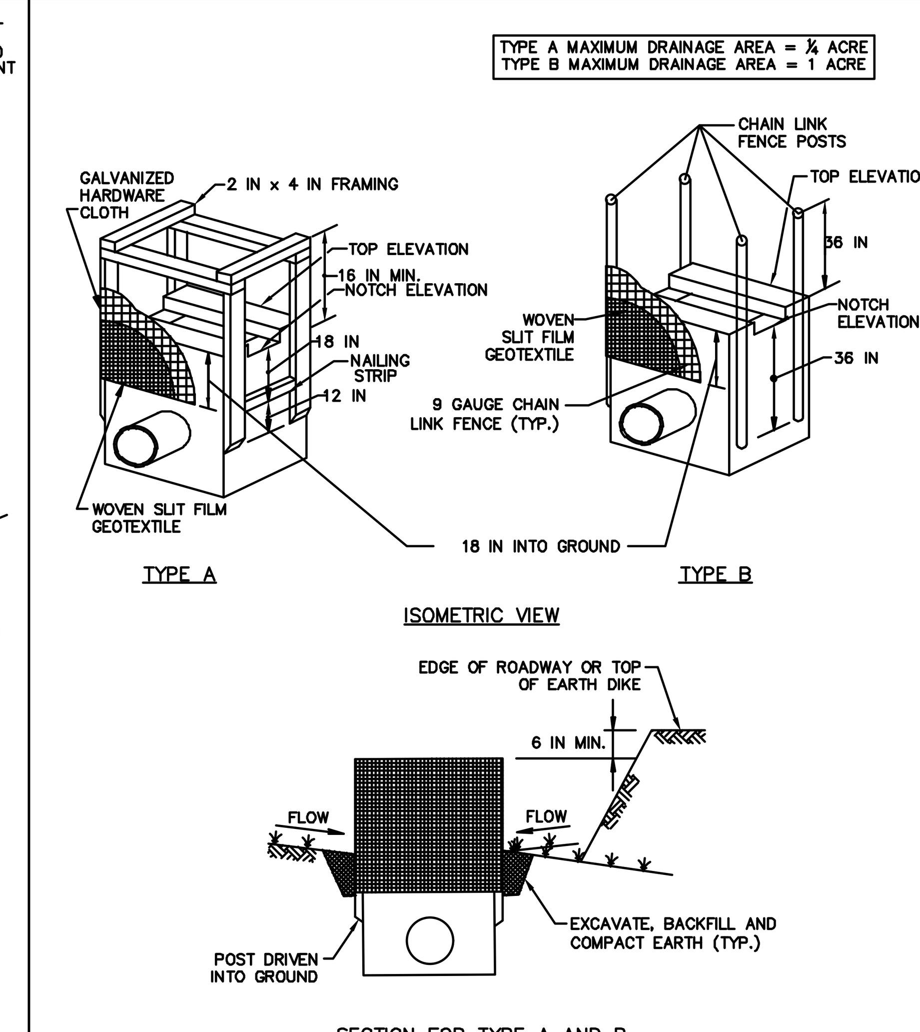

1 OF 2

MARYLAND STANDARDS AND SPECIFICATIONS FOR SOIL EROSION AND SEDIMENT CONTROL

U.S. DEPARTMENT OF AGRICULTURE NATURAL RESOURCES CONSERVATION SERVICE	2011	MARYLAND DEPARTMENT OF ENVIRONMENT WATER MANAGEMENT ADMINISTRATION

DETAIL F-4 FILTER BAG

STANDARD SYMBOL: FB

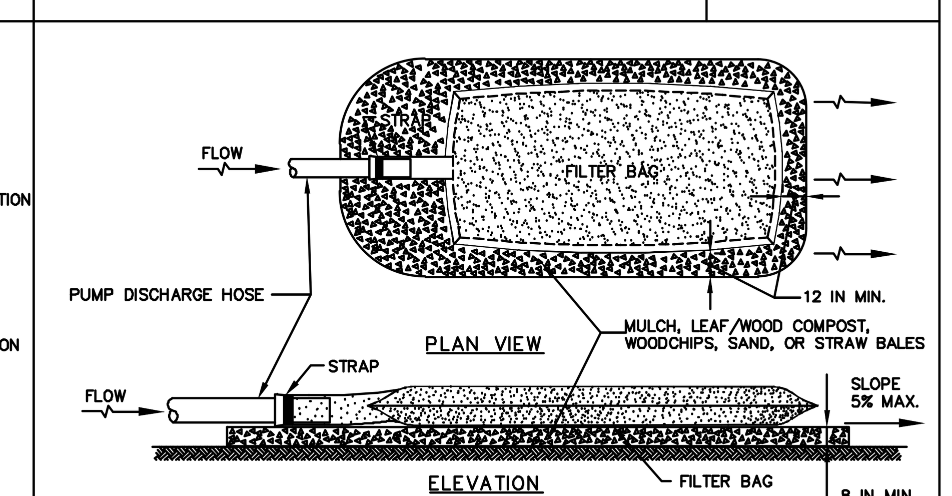

CONSTRUCTION SPECIFICATIONS

1. TIGHTLY SEAL SLEEVE AROUND THE PUMP DISCHARGE HOSE WITH A STRAP OR SIMILAR DEVICE.
2. PLACE FILTER BAG ON SUITABLE BASE (E.G., MULCH, LEAF/WOOD COMPOST, WOODCHIPS, SAND, OR STRAW BALES) LOCATED ON A LEVEL OR 5% MAXIMUM SLOPING SURFACE. DISCHARGE TO A STABILIZED AREA. EXTEND BASE A MINIMUM OF 12 INCHES FROM EDGES OF BAG.
3. CONTROL PUMPING RATE TO PREVENT EXCESSIVE PRESSURE WITHIN THE FILTER BAG IN ACCORDANCE WITH THE MANUFACTURER RECOMMENDATIONS. AS THE BAG FILLS WITH SEDIMENT, REDUCE PUMPING RATE.
4. REMOVE AND PROPERLY DISPOSE OF FILTER BAG UPON COMPLETION OF PUMPING OPERATIONS OR AFTER BAG HAS REACHED CAPACITY, WHICHEVER OCCURS FIRST. SPREAD THE DEWATERED SEDIMENT FROM THE BAG IN AN APPROVED UPLAND AREA AND STABILIZE WITH SEED AND MULCH BY THE END OF THE WORK DAY. RESTORE THE SURFACE AREA BENEATH THE BAG TO ORIGINAL CONDITION UPON REMOVAL OF THE DEVICE.
5. USE NONWOVEN GEOTEXTILE WITH DOUBLE STITCHED SEAMS USING HIGH STRENGTH THREAD. SIZE SLEEVE TO ACCOMMODATE A MAXIMUM 4 INCH DIAMETER PUMP DISCHARGE HOSE. THE BAG MUST BE MANUFACTURED FROM A NONWOVEN GEOTEXTILE THAT MEETS OR EXCEEDS MINIMUM AVERAGE ROLL VALUES (MARV) FOR THE FOLLOWING:

GRAB TENSILE	250 LB	ASTM D-4632
PUNCTURE	150 LB	ASTM D-4833
FLOW RATE	70 GAL/MIN/FT²	ASTM D-4491
PERMITTIVITY (SEC⁻¹)	1.2 SEC⁻¹	ASTM D-4491
UV RESISTANCE	70% STRENGTH @ 500 HOURS	ASTM D-4355
APPARENT OPENING SIZE (AOS)	0.15–0.18 MM	ASTM D-4751
SEAM STRENGTH	90%	ASTM D-4632

6. REPLACE FILTER BAG IF BAG CLOGS OR HAS RIPS, TEARS, OR PUNCTURES. DURING OPERATION KEEP CONNECTION BETWEEN PUMP HOSE AND FILTER BAG WATER TIGHT. REPLACE BEDDING IF IT BECOMES DISPLACED.

MARYLAND STANDARDS AND SPECIFICATIONS FOR SOIL EROSION AND SEDIMENT CONTROL

U.S. DEPARTMENT OF AGRICULTURE NATURAL RESOURCES CONSERVATION SERVICE	2011	MARYLAND DEPARTMENT OF ENVIRONMENT WATER MANAGEMENT ADMINISTRATION

HRG
HERBERT, ROWLAND & GRUBIC, INC.
5 NORTH MAIN STREET
SUITE 3
CHAMBERSBURG, PA 17201
717. 263.2070 | hrg-inc.com

SITE PLAN
FOR
MERITUS SCHOOL OF OSTEOPATHIC MEDICINE
GRADUATE STUDENT HOUSING
1500 MT. AETNA ROAD
HAGERSTOWN, MD 21742
TAX MAP: 50 / GRID: 14 / PARCEL: 1207
HAGERSTOWN WASHINGTON COUNTY MARYLAND

PROFESSIONAL CERTIFICATION:

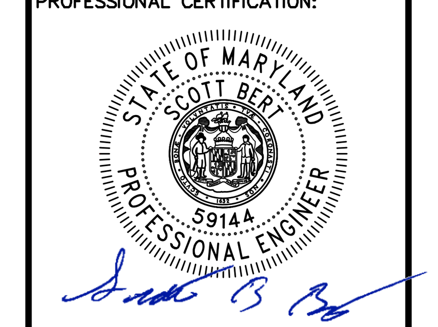

I HEREBY CERTIFY THAT THESE DOCUMENTS WERE PREPARED OR APPROVED BY ME, AND THAT I AM DULY LICENSED PROFESSIONAL ENGINEER UNDER THE LAWS OF THE STATE OF MARYLAND. LICENSE NO. 59144, EXP. DATE: 2024-03-28

HRG PROJECT NUMBER:	R003887.0427
PLAN DATE:	2023.09.01
DRAWING SCALE:	AS SHOWN
PROJ. MANAGER:	SBB

REVISIONS

NO.	DATE	DESCRIPTION
1	2024.01.16	PER VARIOUS REVIEW AGENCY COMMENTS
2		
3		
4		
5		
6		
7		
8		
9		

SHEET TITLE:
E&S CONTROL NOTES & DETAILS

SP-23-034

SHEET: **CD-11** **53 OF 81**

FILE PATH & NAME: P:\0038\003887_0427\C3D\Plan Sets\SP\L003887042703.dwg LAYOUT: CD-11 – ESC – SP LAST PLOTTED: 1/15/2024 4:35 PM BY: TBINGAMAN

DETAIL D-4-1-A ROCK OUTLET PROTECTION I

STANDARD SYMBOL: ROP1

DISCHARGE TO SEMI CONFINED CHANNEL SECTION

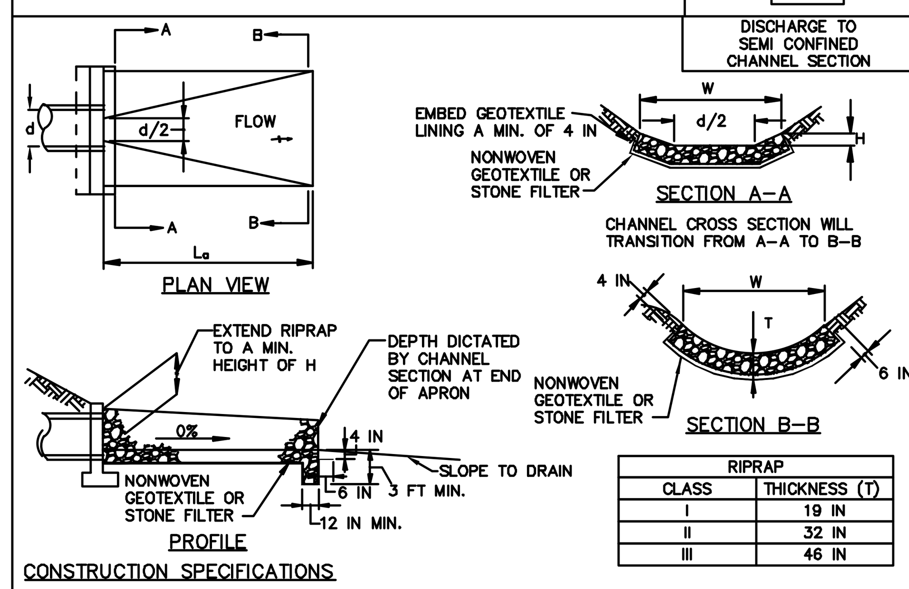

RIPRAP	
CLASS	THICKNESS (T)
I	19 IN
II	32 IN
III	46 IN

CONSTRUCTION SPECIFICATIONS

1. RIPRAP AND STONE MUST CONFORM TO THE SPECIFIED CLASS.
2. USE NONWOVEN GEOTEXTILE AS SPECIFIED IN SECTION H–1 MATERIALS, AND PROTECT FROM PUNCTURING, CUTTING, OR TEARING. REPAIR ANY DAMAGE OTHER THAN AN OCCASIONAL SMALL HOLE BY PLACING ANOTHER PIECE OF GEOTEXTILE OVER THE DAMAGED PART OR BY COMPLETELY REPLACING THE GEOTEXTILE. PROVIDE A MINIMUM OF ONE FOOT OVERLAP FOR ALL REPAIRS AND FOR JOINING TWO PIECES OF GEOTEXTILE TOGETHER.
3. PREPARE THE SUBGRADE FOR GEOTEXTILE OR STONE FILTER (⅜ TO 1½ INCH STONE FOR 6 INCH MINIMUM DEPTH) AND RIPRAP TO THE REQUIRED LINES AND GRADES. COMPACT ANY FILL REQUIRED IN THE SUBGRADE TO A DENSITY OF APPROXIMATELY THAT OF THE SURROUNDING UNDISTURBED MATERIAL.
4. EXTEND GEOTEXTILE AT LEAST 6 INCHES BEYOND EDGES OF RIPRAP AND EMBED AT LEAST 4 INCHES AT SIDES OF THE RIPRAP.
5. CONSTRUCT RIPRAP OUTLET TO FULL COURSE THICKNESS IN ONE OPERATION AND IN SUCH A MANNER AS TO AVOID DISPLACEMENT OF UNDERLYING MATERIALS. PLACE STONE FOR RIPRAP OUTLET IN A MANNER THAT WILL ENSURE THAT IT IS REASONABLY HOMOGENOUS WITH THE SMALLER STONES AND SPALLS FILLING THE VOIDS BETWEEN THE LARGER STONES. PLACE RIPRAP IN A MANNER TO PREVENT DAMAGE TO THE STONE FILTER BLANKET OR GEOTEXTILE. HAND PLACE TO THE EXTENT NECESSARY.
6. WHERE NO ENDWALL IS USED, CONSTRUCT THE UPSTREAM END OF THE APRON SO THAT THE WIDTH IS TWO TIMES THE DIAMETER OF THE OUTLET PIPE, AND EXTEND THE STONE UNDER THE OUTLET BY A MINIMUM OF 18 INCHES.
7. CONSTRUCT APRON WITH 0% SLOPE ALONG ITS LENGTH AND WITHOUT OBSTRUCTIONS. PLACE STONE SO THAT IT BLENDS IN WITH EXISTING GROUND.
8. MAINTAIN LINE, GRADE, AND CROSS SECTION. KEEP OUTLET FREE OF EROSION. REMOVE ACCUMULATED SEDIMENT AND DEBRIS. AFTER HIGH FLOWS INSPECT FOR SCOUR AND DISLODGED RIPRAP. MAKE NECESSARY REPAIRS IMMEDIATELY.

MARYLAND STANDARDS AND SPECIFICATIONS FOR SOIL EROSION AND SEDIMENT CONTROL

U.S. DEPARTMENT OF AGRICULTURE NATURAL RESOURCES CONSERVATION SERVICE	2011	MARYLAND DEPARTMENT OF ENVIRONMENT WATER MANAGEMENT ADMINISTRATION

DETAIL D-4-1-B ROCK OUTLET PROTECTION II

STANDARD SYMBOL: ROPII

DISCHARGE TO CONFINED CHANNEL SECTION

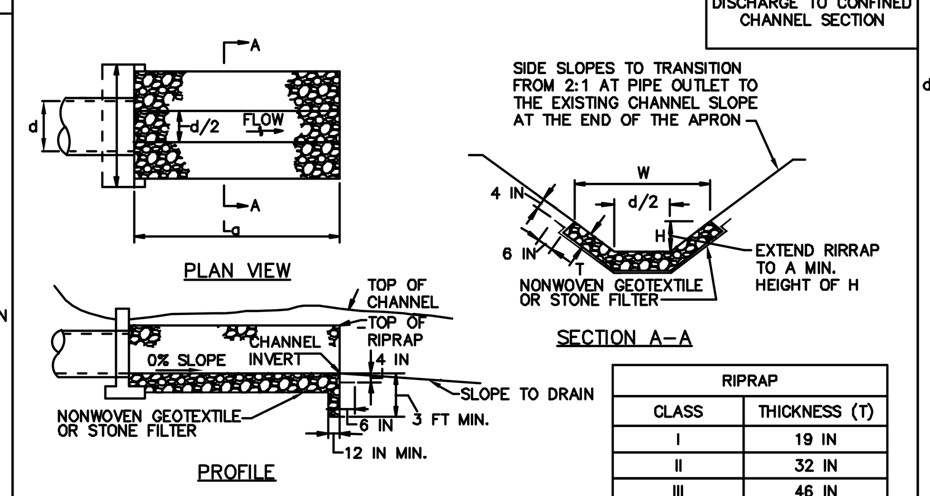

RIPRAP	
CLASS	THICKNESS (T)
I	19 IN
II	32 IN
III	46 IN

CONSTRUCTION SPECIFICATIONS

1. RIPRAP AND STONE MUST CONFORM TO THE SPECIFIED CLASS.
2. USE NONWOVEN GEOTEXTILE AS SPECIFIED IN SECTION H–1 MATERIALS, AND PROTECT FROM PUNCTURING, CUTTING, OR TEARING. REPAIR ANY DAMAGE OTHER THAN AN OCCASIONAL SMALL HOLE BY PLACING ANOTHER PIECE OF GEOTEXTILE OVER THE DAMAGED PART OR BY COMPLETELY REPLACING THE GEOTEXTILE. PROVIDE A MINIMUM OF ONE FOOT OVERLAP FOR ALL REPAIRS AND FOR JOINING TWO PIECES OF GEOTEXTILE TOGETHER.
3. PREPARE THE SUBGRADE FOR GEOTEXTILE OR STONE FILTER (⅜ TO 1½ INCH STONE FOR 6 INCH MINIMUM DEPTH) AND RIPRAP TO THE REQUIRED LINES AND GRADES. COMPACT ANY FILL REQUIRED IN THE SUBGRADE TO A DENSITY OF APPROXIMATELY THAT OF THE SURROUNDING UNDISTURBED MATERIAL.
4. EXTEND GEOTEXTILE AT LEAST 6 INCHES BEYOND EDGES OF RIPRAP AND EMBED AT LEAST 4 INCHES AT SIDES OF RIPRAP.
5. CONSTRUCT RIPRAP OUTLET TO FULL COURSE THICKNESS IN ONE OPERATION AND IN SUCH A MANNER AS TO AVOID DISPLACEMENT OF UNDERLYING MATERIALS. PLACE STONE FOR RIPRAP OUTLET IN A MANNER THAT WILL ENSURE THAT IT IS REASONABLY HOMOGENOUS WITH THE SMALLER STONES AND SPALLS FILLING THE VOIDS BETWEEN THE LARGER STONES. PLACE RIPRAP IN A MANNER TO PREVENT DAMAGE TO THE STONE FILTER BLANKET OR GEOTEXTILE. HAND PLACE TO THE EXTENT NECESSARY.
6. WHERE NO ENDWALL IS USED, CONSTRUCT THE UPSTREAM END OF THE APRON SO THAT THE WIDTH IS TWO TIMES THE DIAMETER OF THE OUTLET PIPE, AND EXTEND THE STONE UNDER THE OUTLET BY A MINIMUM OF 18 INCHES.
7. CONSTRUCT APRON WITH 0% SLOPE ALONG ITS LENGTH AND WITHOUT OBSTRUCTIONS. PLACE STONE SO THAT IT BLENDS IN WITH EXISTING GROUND.
8. MAINTAIN LINE, GRADE, AND CROSS SECTION. KEEP OUTLET FREE OF EROSION. REMOVE ACCUMULATED SEDIMENT AND DEBRIS. AFTER HIGH FLOWS INSPECT FOR SCOUR AND DISLODGED RIPRAP. MAKE NECESSARY REPAIRS IMMEDIATELY.

MARYLAND STANDARDS AND SPECIFICATIONS FOR SOIL EROSION AND SEDIMENT CONTROL

U.S. DEPARTMENT OF AGRICULTURE NATURAL RESOURCES CONSERVATION SERVICE	2011	MARYLAND DEPARTMENT OF ENVIRONMENT WATER MANAGEMENT ADMINISTRATION

DETAIL D-4-1-C ROCK OUTLET PROTECTION III

STANDARD SYMBOL: ROPIII

DISCHARGE TO AN UNCONFINED CHANNEL OR FLAT AREA

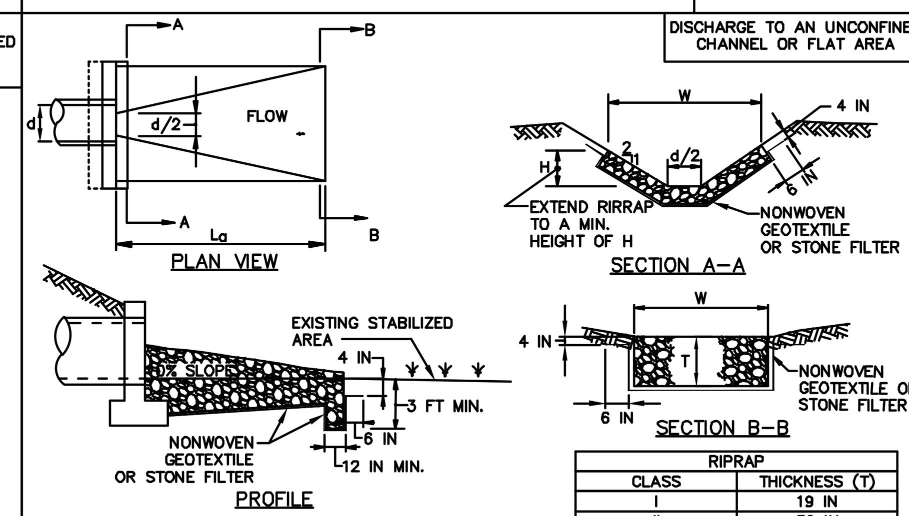

RIPRAP	
CLASS	THICKNESS (T)
I	19 IN
II	32 IN
III	46 IN

CONSTRUCTION SPECIFICATIONS

1. RIPRAP AND STONE MUST CONFORM TO THE SPECIFIED CLASS.
2. USE NONWOVEN GEOTEXTILE, AS SPECIFIED IN SECTION H–1 MATERIALS, AND PROTECT FROM PUNCTURING, CUTTING, OR TEARING. REPAIR ANY DAMAGE OTHER THAN AN OCCASIONAL SMALL HOLE BY PLACING ANOTHER PIECE OF GEOTEXTILE OVER THE DAMAGED PART OR BY COMPLETELY REPLACING THE GEOTEXTILE. PROVIDE A MINIMUM OF ONE FOOT OVERLAP FOR ALL REPAIRS AND FOR JOINING TWO PIECES OF GEOTEXTILE TOGETHER.
3. PREPARE THE SUBGRADE FOR GEOTEXTILE OR STONE FILTER (⅜ TO 1½ INCH MINIMUM STONE FOR 6 INCH MINIMUM DEPTH) AND RIPRAP TO THE REQUIRED LINES AND GRADES. COMPACT ANY FILL REQUIRED IN THE SUBGRADE TO A DENSITY OF APPROXIMATELY THAT OF THE SURROUNDING UNDISTURBED MATERIAL.
4. EXTEND GEOTEXTILE AT LEAST 6 INCHES BEYOND EDGES OF RIPRAP AND EMBED AT LEAST 4 INCHES AT SIDES OF RIPRAP.
5. CONSTRUCT RIPRAP OUTLET TO FULL COURSE THICKNESS IN ONE OPERATION AND IN SUCH A MANNER AS TO AVOID DISPLACEMENT OF UNDERLYING MATERIALS. PLACE STONE FOR RIPRAP OUTLET IN A MANNER THAT WILL ENSURE THAT IT IS REASONABLY HOMOGENOUS WITH THE SMALLER STONES AND SPALLS FILLING THE VOIDS BETWEEN THE LARGER STONES. PLACE RIPRAP IN A MANNER TO PREVENT DAMAGE TO THE FILTER BLANKET OR GEOTEXTILE. HAND PLACE TO THE EXTENT NECESSARY.
6. WHERE NO ENDWALL IS USED, CONSTRUCT THE UPSTREAM END OF THE APRON SO THAT THE WIDTH IS TWO TIMES THE DIAMETER OF THE OUTLET PIPE, AND EXTEND THE STONE UNDER THE OUTLET BY A MINIMUM OF 18 INCHES.
7. CONSTRUCT APRON WITH 0% SLOPE ALONG ITS LENGTH AND WITHOUT OBSTRUCTIONS. PLACE STONE SO THAT IT BLENDS IN WITH EXISTING GROUND.
8. MAINTAIN LINE, GRADE, AND CROSS SECTION. KEEP OUTLET FREE OF EROSION. REMOVE ACCUMULATED SEDIMENT AND DEBRIS. AFTER HIGH FLOWS INSPECT FOR SCOUR AND RIPRAP DISLODGED RIPRAP. MAKE NECESSARY REPAIRS IMMEDIATELY.

MARYLAND STANDARDS AND SPECIFICATIONS FOR SOIL EROSION AND SEDIMENT CONTROL

U.S. DEPARTMENT OF AGRICULTURE NATURAL RESOURCES CONSERVATION SERVICE	2011	MARYLAND DEPARTMENT OF ENVIRONMENT WATER MANAGEMENT ADMINISTRATION

DETAIL E-1 SILT FENCE

STANDARD SYMBOL: ——SF——

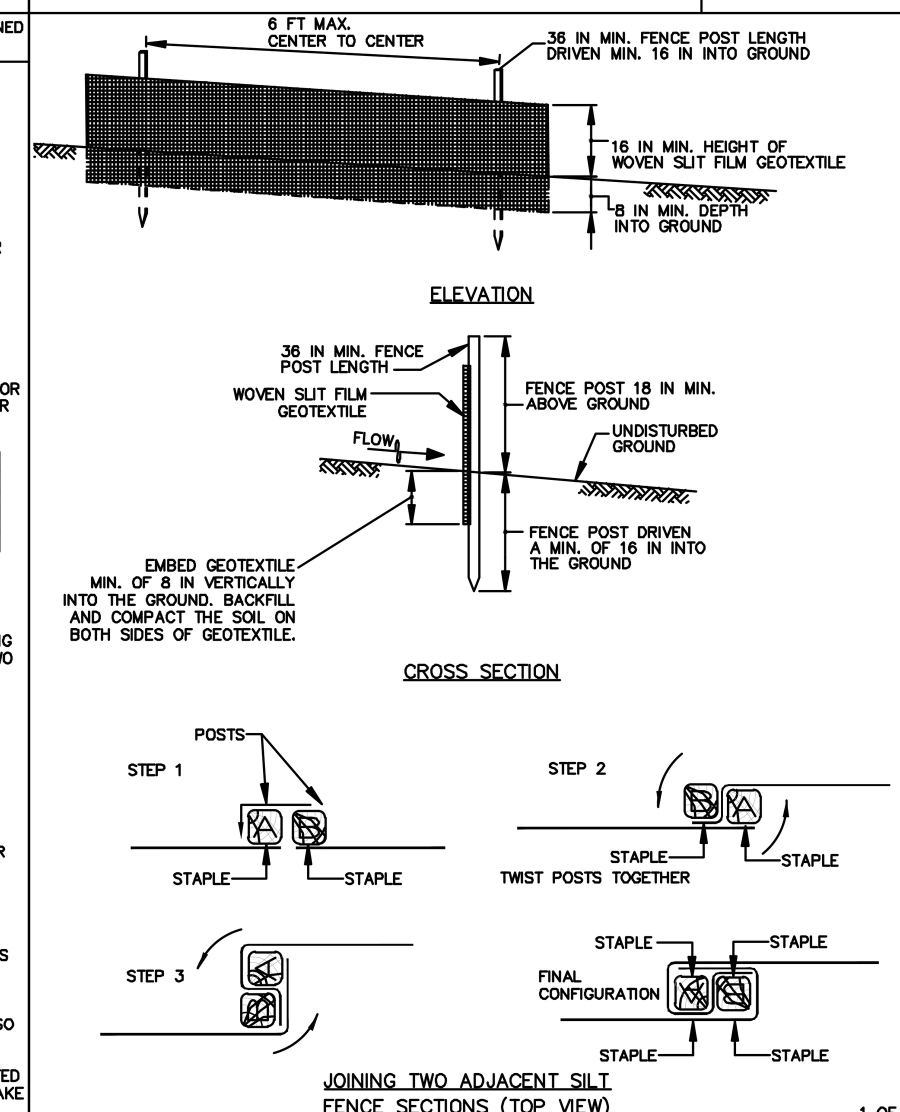

1 OF 2

MARYLAND STANDARDS AND SPECIFICATIONS FOR SOIL EROSION AND SEDIMENT CONTROL

U.S. DEPARTMENT OF AGRICULTURE NATURAL RESOURCES CONSERVATION SERVICE	2011	MARYLAND DEPARTMENT OF ENVIRONMENT WATER MANAGEMENT ADMINISTRATION

DETAIL E-1 SILT FENCE

STANDARD SYMBOL: ——SF——

CONSTRUCTION SPECIFICATIONS

1. USE WOOD POSTS 1¾ X 1¾ ± 1⁄16 INCH (MINIMUM) SQUARE CUT OF SOUND QUALITY HARDWOOD. AS AN ALTERNATIVE TO WOODEN POST USE STANDARD "T" OR "U" SECTION STEEL POSTS WEIGHING NOT LESS THAN 1 POUND PER LINEAR FOOT.
2. USE 36 INCH MINIMUM POSTS DRIVEN 16 INCH MINIMUM INTO GROUND NO MORE THAN 6 FEET APART.
3. USE WOVEN SLIT FILM GEOTEXTILE AS SPECIFIED IN SECTION H–1 MATERIALS AND FASTEN GEOTEXTILE SECURELY TO UPSLOPE SIDE OF FENCE POSTS WITH WIRE TIES OR STAPLES AT TOP AND MID–SECTION.
4. PROVIDE MANUFACTURER CERTIFICATION TO THE AUTHORIZED REPRESENTATIVE OF THE INSPECTION/ENFORCEMENT AUTHORITY SHOWING THAT THE GEOTEXTILE USED MEETS THE REQUIREMENTS IN SECTION H–1 MATERIALS.
5. EMBED GEOTEXTILE A MINIMUM OF 8 INCHES VERTICALLY INTO THE GROUND. BACKFILL AND COMPACT THE SOIL ON BOTH SIDES OF FABRIC.
6. WHERE TWO SECTIONS OF GEOTEXTILE ADJOIN: OVERLAP, TWIST, AND STAPLE TO POST IN ACCORDANCE WITH THIS DETAIL.
7. EXTEND BOTH ENDS OF THE SILT FENCE A MINIMUM OF FIVE HORIZONTAL FEET UPSLOPE AT 45 DEGREES TO THE MAIN FENCE ALIGNMENT TO PREVENT RUNOFF FROM GOING AROUND THE ENDS OF THE SILT FENCE.
8. REMOVE ACCUMULATED SEDIMENT AND DEBRIS WHEN BULGES DEVELOP IN SILT FENCE OR WHEN SEDIMENT REACHES 25% OF FENCE HEIGHT. REPLACE GEOTEXTILE IF TORN. IF UNDERMINING OCCURS, REINSTALL FENCE.

2 OF 2

MARYLAND STANDARDS AND SPECIFICATIONS FOR SOIL EROSION AND SEDIMENT CONTROL

U.S. DEPARTMENT OF AGRICULTURE NATURAL RESOURCES CONSERVATION SERVICE	2011	MARYLAND DEPARTMENT OF ENVIRONMENT WATER MANAGEMENT ADMINISTRATION

DETAIL E-3 SUPER SILT FENCE

STANDARD SYMBOL: ——SSF——

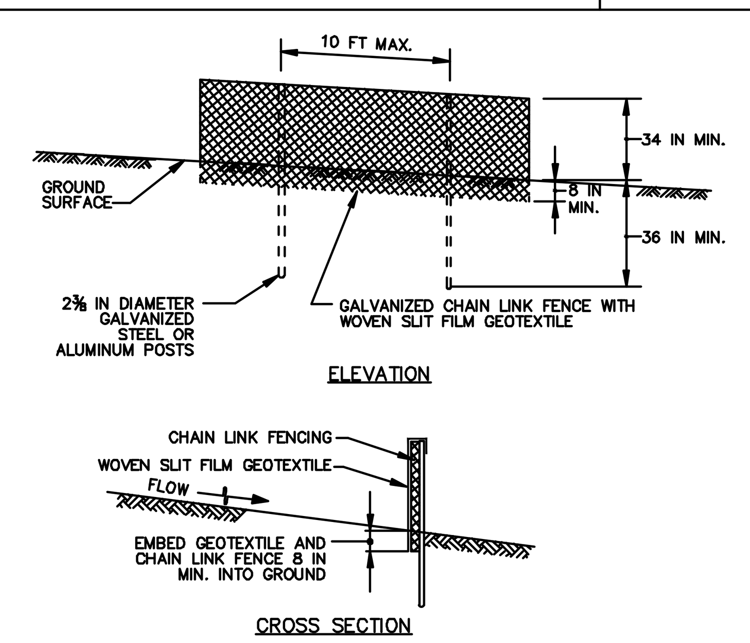

CONSTRUCTION SPECIFICATIONS

1. INSTALL 2⅜ INCH DIAMETER GALVANIZED STEEL POSTS OF 0.095 INCH WALL THICKNESS AND SIX FOOT LENGTH SPACED NO FURTHER THAN 10 FEET APART. DRIVE THE POSTS A MINIMUM OF 36 INCHES INTO THE GROUND.
2. FASTEN 9 GAUGE OR HEAVIER GALVANIZED CHAIN LINK FENCE (2⅜ INCH MAXIMUM OPENING) 42 INCHES IN HEIGHT SECURELY TO THE FENCE POSTS WITH WIRE TIES OR HUG RINGS.
3. FASTEN WOVEN SLIT FILM GEOTEXTILE AS SPECIFIED IN SECTION H–1 MATERIALS, SECURELY TO THE UPSLOPE SIDE OF CHAIN LINK FENCE WITH TIES SPACED EVERY 24 INCHES AT THE TOP AND MID SECTION. EMBED GEOTEXTILE AND CHAIN LINK FENCE A MINIMUM OF 8 INCHES INTO THE GROUND.
4. WHERE ENDS OF THE GEOTEXTILE COME TOGETHER, THE ENDS SHALL BE OVERLAPPED BY 6 INCHES, FOLDED, AND STAPLED TO PREVENT SEDIMENT BY PASS.
5. EXTEND BOTH ENDS OF THE SUPER SILT FENCE A MINIMUM OF FIVE HORIZONTAL FEET UPSLOPE AT 45 DEGREES TO THE MAIN FENCE ALIGNMENT TO PREVENT RUNOFF FROM GOING AROUND THE ENDS OF THE SUPER SILT FENCE.
6. PROVIDE MANUFACTURER CERTIFICATION TO THE INSPECTION/ENFORCEMENT AUTHORITY SHOWING THAT GEOTEXTILE USED MEETS THE REQUIREMENTS IN SECTION H–1 MATERIALS.
7. REMOVE ACCUMULATED SEDIMENT AND DEBRIS WHEN BULGES DEVELOP IN FENCE OR WHEN SEDIMENT REACHES 25% OF FENCE HEIGHT. REPLACE GEOTEXTILE IF TORN. IF UNDERMINING OCCURS, REINSTALL CHAIN LINK FENCING AND GEOTEXTILE.

MARYLAND STANDARDS AND SPECIFICATIONS FOR SOIL EROSION AND SEDIMENT CONTROL

U.S. DEPARTMENT OF AGRICULTURE NATURAL RESOURCES CONSERVATION SERVICE	2011	MARYLAND DEPARTMENT OF ENVIRONMENT WATER MANAGEMENT ADMINISTRATION

DETAIL H-4-2 TEMPORARY ACCESS CULVERT

STANDARD SYMBOL: TAC

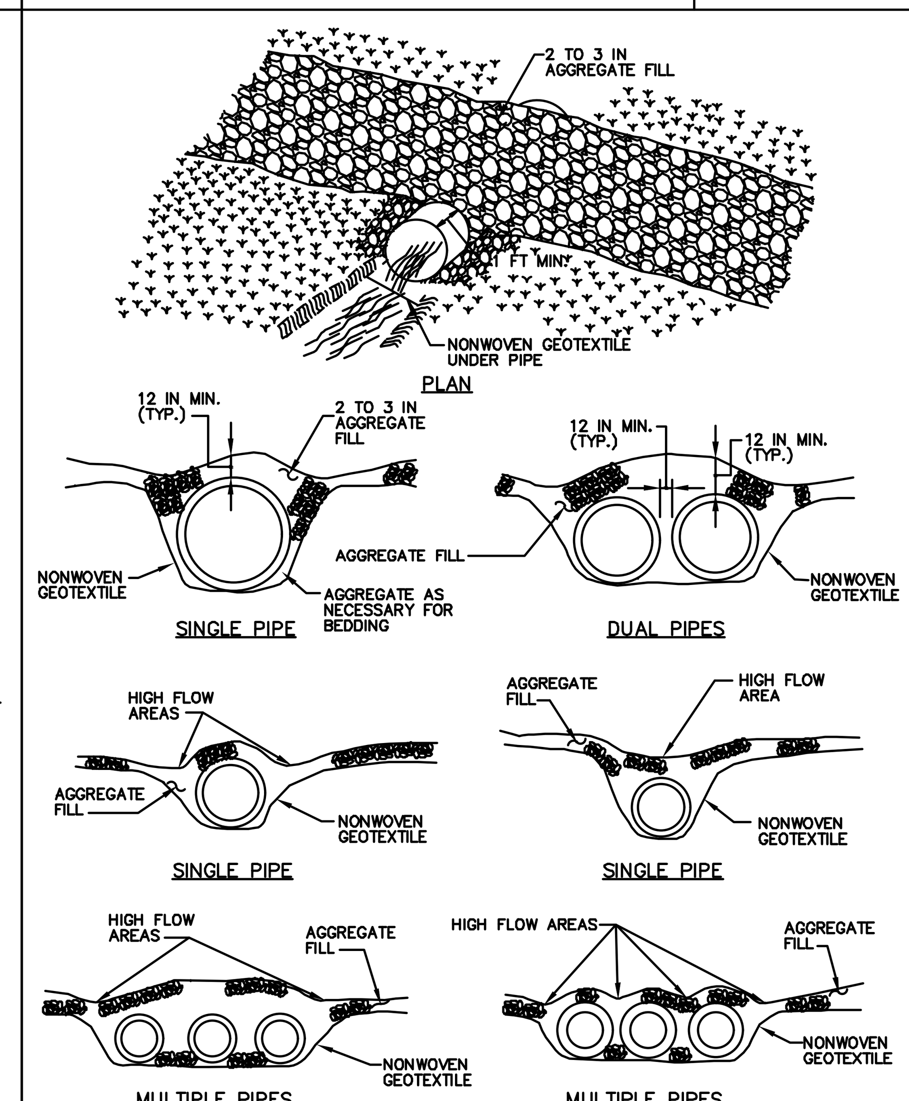

1 OF 2

MARYLAND STANDARDS AND SPECIFICATIONS FOR SOIL EROSION AND SEDIMENT CONTROL

U.S. DEPARTMENT OF AGRICULTURE NATURAL RESOURCES CONSERVATION SERVICE	2011	MARYLAND DEPARTMENT OF ENVIRONMENT WATER MANAGEMENT ADMINISTRATION

DETAIL H-4-2 TEMPORARY ACCESS CULVERT

STANDARD SYMBOL: TAC

CONSTRUCTION SPECIFICATIONS

1. CONSTRUCTION OR REMOVAL OF A TEMPORARY ACCESS CULVERT WILL NOT BE PERMITTED DURING THE FOLLOWING PERIODS:

USE I AND IP	MARCH 1 – JUNE 15
USE II	JUNE 1 – SEPTEMBER 30 AND DECEMBER 16 – MARCH 14
USE III AND IIIP	OCTOBER 1 – APRIL 30
USE IV	MARCH 1 – MAY 31
SAV* (ALL FLOWING STREAMS)	APRIL 15 – OCTOBER 15

*SUBMERGED AQUATIC VEGETATION

2. EXTEND THE CULVERT(S) A MINIMUM OF ONE FOOT BEYOND THE UPSTREAM AND DOWNSTREAM TOE OF THE AGGREGATE PLACED AROUND THE CULVERT.
3. PLACE NONWOVEN GEOTEXTILE ON THE STREAM BED AND STREAM BANKS PRIOR TO PLACEMENT OF THE PIPE CULVERT(S) AND AGGREGATE. COVER THE STREAM BED WITH THE GEOTEXTILE AND EXTEND IT A MINIMUM SIX INCHES AND A MAXIMUM OF ONE FOOT BEYOND THE END OF THE CULVERT AND BEDDING MATERIAL. USE NONWOVEN GEOTEXTILE AS SPECIFIED IN SECTION H–1 MATERIALS. GEOTEXTILE REDUCES SETTLEMENT AND IMPROVES CROSSING STABILITY.
4. PLACE CULVERT(S) ON THE NATURAL STREAM BED GRADE TO MINIMIZE INTERFERENCE WITH FISH PASSAGE.
5. COVER THE CULVERT WITH A MINIMUM OF ONE FOOT OF WASHED AGGREGATE. FOR MULTIPLE CULVERTS PROVIDE AT LEAST 12 INCHES OF COMPACTED AGGREGATE FILL BETWEEN CULVERTS.
6. STABILIZE ALL AREAS DISTURBED DURING CULVERT INSTALLATION WITHIN 24 HOURS OF THE DISTURBANCE IN ACCORDANCE WITH STANDARDS FOR PERMANENT STABILIZATION, SECTION B–4–5, OR TEMPORARY STABILIZATION, SECTION B–4–4, AS APPLICABLE.
7. STABILIZE APPROACH TO CROSSING AND KEEP FREE OF EROSION. REPLACE DISPLACED STONE, AND MAINTAIN HIGH FLOW AREAS. REMOVE DEBRIS TRAPPED BY CULVERT. REPLACE DAMAGED PIPE(S). MAINTAIN AREAS ADJACENT TO CROSSING TO CONTINUOUSLY MEET REQUIREMENTS FOR ADEQUATE VEGETATIVE ESTABLISHMENT IN ACCORDANCE WITH SECTION B–4 VEGETATIVE STABILIZATION.
8. AFTER THE TEMPORARY CROSSING IS NO LONGER NEEDED, REMOVE IT WITHIN 14 CALENDAR DAYS. IF SUBJECT TO THE USE DESIGNATION CLOSURE, REMOVE AT THE END OF CLOSURE PERIOD. PROTECT STREAM BANKS DURING CULVERT REMOVAL AND STABILIZE ALL DISTURBED AREAS WITH EROSION CONTROL MATTING. ACCOMPLISH REMOVAL OF THE CULVERT AND CLEAN UP OF THE AREA WITHOUT CONSTRUCTION EQUIPMENT WORKING IN THE WATERWAY CHANNEL. STORE ALL REMOVED MATERIALS IN AN APPROVED STAGING AREA.

2 OF 2

MARYLAND STANDARDS AND SPECIFICATIONS FOR SOIL EROSION AND SEDIMENT CONTROL

U.S. DEPARTMENT OF AGRICULTURE NATURAL RESOURCES CONSERVATION SERVICE	2011	MARYLAND DEPARTMENT OF ENVIRONMENT WATER MANAGEMENT ADMINISTRATION

HRG
HERBERT, ROWLAND & GRUBIC, INC.
5 NORTH MAIN STREET
SUITE 3
CHAMBERSBURG, PA 17201
717. 263.2070 | hrg-inc.com

SITE PLAN FOR MERITUS SCHOOL OF OSTEOPATHIC MEDICINE GRADUATE STUDENT HOUSING

1500 MT. AETNA ROAD
HAGERSTOWN, MD 21742
TAX MAP: 50 / GRID: 14 / PARCEL: 1207
HAGERSTOWN WASHINGTON COUNTY MARYLAND

PROFESSIONAL CERTIFICATION:

STATE OF MARYLAND · SCOTT BERT · 59144 · PROFESSIONAL ENGINEER

I HEREBY CERTIFY THAT THESE DOCUMENTS WERE PREPARED OR APPROVED BY ME, AND THAT I AM DULY LICENSED PROFESSIONAL ENGINEER UNDER THE LAWS OF THE STATE OF MARYLAND. LICENSE NO. 59144, EXP. DATE: 2024-03-28

HRG PROJECT NUMBER:	R003887.0427
PLAN DATE:	2023.09.01
DRAWING SCALE:	AS SHOWN
PROJ. MANAGER:	SBB

REVISIONS

NO.	DATE	DESCRIPTION
1	2024.01.16	PER VARIOUS REVIEW AGENCY COMMENTS
2		
3		
4		
5		
6		
7		
8		
9		

SHEET TITLE:

E&S CONTROL NOTES & DETAILS

SP-23-034

SHEET: CD-12 | 54 OF 81

FILE PATH & NAME: P:\0038\003887_0427\C3D\Plan Sets\SP\L003887O427CD.dwg LAYOUT: CD-12 - ESC - SP LAST PLOTTED: 1/15/2024 4:35 PM BY: TBINGAMAN

DETAIL G-1-1 PIPE OUTLET SEDIMENT TRAP ST-I

STANDARD SYMBOL: ST–I

MAXIMUM DRAINAGE AREA = 5 ACRES

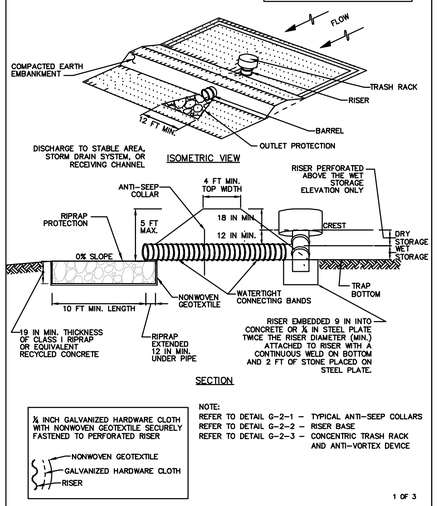

NOTE:
REFER TO DETAIL G–2–1 – TYPICAL ANTI–SEEP COLLARS
REFER TO DETAIL G–2–2 – RISER BASE
REFER TO DETAIL G–2–3 – CONCENTRIC TRASH RACK AND ANTI–VORTEX DEVICE

1 OF 3

MARYLAND STANDARDS AND SPECIFICATIONS FOR SOIL EROSION AND SEDIMENT CONTROL

U.S. DEPARTMENT OF AGRICULTURE NATURAL RESOURCES CONSERVATION SERVICE | 2011 | MARYLAND DEPARTMENT OF ENVIRONMENT WATER MANAGEMENT ADMINISTRATION

DETAIL G-1-1 PIPE OUTLET SEDIMENT TRAP ST-I

STANDARD SYMBOL: ST–I

CONSTRUCTION SPECIFICATIONS

1. CONSTRUCT TRAP IN SUCH A MANNER THAT EROSION AND WATER POLLUTION ARE AVOIDED.
2. CLEAR, GRUB, AND STRIP ANY VEGETATION AND ROOT MAT FROM THE AREA UNDER THE EMBANKMENT AND TRAP BOTTOM.
3. PERFORATE THE RISER WITH 1 INCH DIAMETER HOLES SPACED 6 INCHES ON CENTER WITH THE LOWEST PERFORATIONS AT THE WET STORAGE ELEVATION OR PROVIDE A HORIZONTAL OR VERTICAL DRAW–DOWN DEVICE PERFORATED ACCORDING TO APPROVED PLAN. DO NOT PERFORATE THE RISER WITHIN 6 INCHES OF THE TOP OF THE HORIZONTAL BARREL.
4. SET RISER/BARREL ASSEMBLY PRIOR TO EMBANKMENT CONSTRUCTION. MAKE ALL PIPE CONNECTIONS WATERTIGHT. OFFSET RISER FROM EMBANKMENT TO ACCOMODATE PLACEMENT OF THE TRASH RACK. ANCHOR THE RISER WITH EITHER A REINFORCED CONCRETE BASE OR STEEL PLATE BASE TO PREVENT FLOTATION. MAKE CONCRETE BASES AT LEAST TWICE THE RISER DIAMETER AND 18 INCHES THICK WITH THE RISER EMBEDDED 9 INCHES.
5. USE FILL MATERIAL FREE OF ROOTS, WOODY VEGETATION, OVERSIZED STONES, ROCKS, ORGANIC MATERIAL, OR OTHER OBJECTIONABLE MATERIAL FOR THE EMBANKMENT.
6. HAND COMPACT IN 4 INCH LAYERS FILL MATERIAL AROUND THE PIPE SPILLWAY. PLACE A MINIMUM OF 2 FEET OF HAND COMPACTED BACKFILL OVER THE PIPE SPILLWAY BEFORE CROSSING IT WITH CONSTRUCTION EQUIPMENT.
7. CONSTRUCT TOP OF EMBANKMENT 1 FOOT MINIMUM ABOVE RISER CREST. COMPACT THE EMBANKMENT BY TRAVERSING WITH EQUIPMENT WHILE IT IS BEING CONSTRUCTED.
8. MAKE ALL CUT AND FILL SLOPES 2:1 OR FLATTER.
9. WRAP THE RISER WITH ¼ INCH GALVANIZED HARDWARE CLOTH THEN WRAP WITH NONWOVEN GEOTEXTILE. DO NOT WRAP WITH MORE THAN ONE LAYER OF GEOTEXTILE. EXTEND HARDWARE CLOTH AND GEOTEXTILE AT LEAST 6 INCHES ABOVE THE HIGHEST PERFORATIONS AND AT LEAST 6 INCHES BELOW THE LOWEST PERFORATIONS. OVERLAP, FOLD AND FASTEN WHERE ENDS OF GEOTEXTILE COME TOGETHER TO PREVENT BYPASS. REPLACE GEOTEXTILE AS NECESSARY TO PREVENT CLOGGING.
10. USE STRAPS OR CONNECTING BANDS AT THE TOP AND BOTTOM OF THE GEOTEXTILE TO HOLD THE GEOTEXTILE AND HARDWARE CLOTH IN PLACE.
11. USE NONWOVEN GEOTEXTILE AS SPECIFIED IN SECTION H–1 MATERIALS.
12. STABILIZE THE EMBANKMENT AND INTERIOR SLOPES WITH SEED AND MULCH. STABILIZE POINTS OF CONCENTRATED INFLOW AS SHOWN ON APPROVED PLAN.
13. CONSTRUCT AND MAINTAIN THE OUTLET ACCORDING TO THE APPROVED PLAN AND IN SUCH A MANNER THAT EROSION AT OR BELOW THE OUTLET DOES NOT OCCUR.
14. REMOVE SEDIMENT AND RESTORE TRAP TO ORIGINAL DIMENSIONS WHEN SEDIMENT HAS ACCUMULATED TO CLEANOUT ELEVATION (50% OF WET STORAGE DEPTH). DEPOSIT REMOVED SEDIMENT IN AN APPROVED AREA AND IN SUCH A MANNER THAT IT WILL NOT ERODE. KEEP POINTS OF INFLOW AND OUTFLOW AS WELL AS INTERIOR OF THE TRAP FREE FROM EROSION, AND REMOVE ACCUMULATED DEBRIS. MAINTAIN EMBANKMENTS TO CONTINUOUSLY MEET REQUIREMENTS FOR ADEQUATE VEGETATIVE ESTABLISHMENT IN ACCORDANCE WITH SECTION B–4 VEGETATIVE STABILIZATION. REMOVE ANY TREES, BRUSH, OR OTHER WOODY VEGETATION GROWING ON EMBANKMENT OR NEAR PRINCIPAL SPILLWAY. MAINTAIN LINE, GRADE, AND CROSS SECTION. MAINTAIN WATER TIGHT CONNECTIONS. REPLACE GEOTEXTILE AROUND PERFORATED RISER IF DRY STORAGE VOLUME DOES NOT DRAW DOWN WITHIN 10 HOURS.
15. WHEN DEWATERING TRAP, PASS REMOVED WATER THROUGH AN APPROVED SEDIMENT CONTROL PRACTICE.
16. UPON REMOVAL, GRADE AND STABILIZE THE AREA OCCUPIED BY TRAP.

2 OF 3

MARYLAND STANDARDS AND SPECIFICATIONS FOR SOIL EROSION AND SEDIMENT CONTROL

U.S. DEPARTMENT OF AGRICULTURE NATURAL RESOURCES CONSERVATION SERVICE | 2011 | MARYLAND DEPARTMENT OF ENVIRONMENT WATER MANAGEMENT ADMINISTRATION

DETAIL G-1-2 STONE/RIPRAP OUTLET SEDIMENT TRAP ST-II

STANDARD SYMBOL: ST–II

MAXIMUM DRAINAGE AREA = 10 ACRES

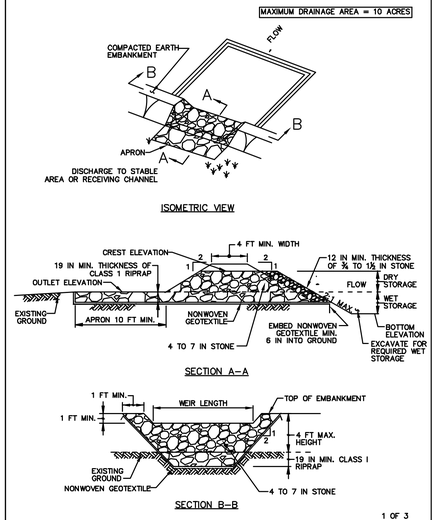

1 OF 3

MARYLAND STANDARDS AND SPECIFICATIONS FOR SOIL EROSION AND SEDIMENT CONTROL

U.S. DEPARTMENT OF AGRICULTURE NATURAL RESOURCES CONSERVATION SERVICE | 2011 | MARYLAND DEPARTMENT OF ENVIRONMENT WATER MANAGEMENT ADMINISTRATION

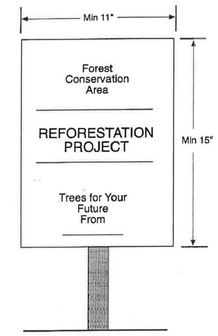

Notes:
1. The signs notify construction workers and future residents of the newly planted material, improving the trees' survival rates.
2. Signs may be adapted by residents for identification of forest retention areas

Source: Adapted from Forest Conservation Manual, 1991

REFORESTATION AND AFFORESTATION AREA SIGNS

NOT TO SCALE

DETAIL G-1-2 STONE/RIPRAP OUTLET SEDIMENT TRAP ST-II

STANDARD SYMBOL: ST–II

STONE/RIPRAP OUTLET SEDIMENT TRAP ST–II, TRAP NO. 1		
DRAINAGE AREA – INITIAL		ACRES
DRAINAGE AREA – INTERIM Maximum	5.75	ACRES
DRAINAGE AREA – FINAL		ACRES
TOTAL STORAGE REQUIRED	21,600	CF
TOTAL STORAGE PROVIDED	33,743	CF
WET STORAGE REQUIRED	10,800	CF
WET STORAGE PROVIDED	14,514	CF
DRY STORAGE REQUIRED	10,800	CF
DRY STORAGE PROVIDED	19,229	CF
EXISTING GROUND ELEVATION AT OUTLET (WET STORAGE ELEVATION)	531.00	FT
TRAP BOTTOM ELEVATION	529.00	FT
TRAP BOTTOM DIMENSIONS	113 x 60	FT x FT
WEIR LENGTH	25	FT
WEIR CREST (DRY STORAGE) ELEVATION	533.00	FT
CLEANOUT ELEVATION	530.00	FT
TOP OF EMBANKMENT ELEVATION	534.00	FT
SIDE SLOPE	3:1	H:V RATIO
EMBANKMENT TOP WIDTH	4	FT
OUTLET PROTECTION – LENGTH	13	FT
OUTLET PROTECTION – DEPTH	16	IN

3 OF 3

MARYLAND STANDARDS AND SPECIFICATIONS FOR SOIL EROSION AND SEDIMENT CONTROL

U.S. DEPARTMENT OF AGRICULTURE NATURAL RESOURCES CONSERVATION SERVICE | 2011 | MARYLAND DEPARTMENT OF ENVIRONMENT WATER MANAGEMENT ADMINISTRATION

G.13

DETAIL G-1-1 PIPE OUTLET SEDIMENT TRAP ST-I

STANDARD SYMBOL: ST–I

PIPE OUTLET SEDIMENT TRAP ST–I, TRAP NO. 2		
DRAINAGE AREA – INTIAL		ACRES
DRAINAGE AREA – INTERIM Maximum	2.48	ACRES
DRAINAGE AREA – FINAL		ACRES
TOTAL STORAGE REQUIRED	8,910	CF
TOTAL STORAGE PROVIDED	18,856	CF
WET STORAGE REQUIRED	4,455	CF
WET STORAGE PROVIDED	11,586	CF
DRY STORAGE REQUIRED	4,455	CF
DRY STORAGE PROVIDED	7,270	CF
TRAP BOTTOM ELEVATION	539.00	FT
TRAP BOTTOM DIMENSIONS	80 x 60	FT x FT
RISER CREST (DRY STORAGE) ELEVATION	542.00	FT
OUTLET (WET STORAGE) ELEVATION	541.00	FT
CLEANOUT ELEVATION	540.00	FT
TOP OF EMBANKMENT ELEVATION	544.00	FT
SIDE SLOPE	3:1	H:V RATIO
EMBANKMENT TOP WIDTH	4	FT
PRINCIPAL SPILLWAY MATERIAL (BARREL, RISER, ANTI–SEEP COLLAR)	SLCPP, SLCPP, HDPE	
RISER DIAMETER	TYPE S INLET	IN
BARREL DIAMETER	24	IN
TRASH RACK DIAMETER	SEE DETAIL	IN
TRASH RACK HEIGHT	SEE DETAIL	IN
ANTI–SEEP COLLAR DIMENSIONS	6 x 6	FT
OUTLET PROTECTION – LENGTH	13	FT
OUTLET PROTECTION – WIDTH	15	FT
OUTLET PROTECTION – DEPTH	16	IN

3 OF 3

MARYLAND STANDARDS AND SPECIFICATIONS FOR SOIL EROSION AND SEDIMENT CONTROL

U.S. DEPARTMENT OF AGRICULTURE NATURAL RESOURCES CONSERVATION SERVICE | 2011 | MARYLAND DEPARTMENT OF ENVIRONMENT WATER MANAGEMENT ADMINISTRATION

G.8

DETAIL G-1-1 PIPE OUTLET SEDIMENT TRAP ST-I

STANDARD SYMBOL: ST–I

PIPE OUTLET SEDIMENT TRAP ST–I, TRAP NO. 3		
DRAINAGE AREA – INTIAL		ACRES
DRAINAGE AREA – INTERIM Maximum	2.12	ACRES
DRAINAGE AREA – FINAL		ACRES
TOTAL STORAGE REQUIRED	7,636	CF
TOTAL STORAGE PROVIDED	9,702	CF
WET STORAGE REQUIRED	3,818	CF
WET STORAGE PROVIDED	3,945	CF
DRY STORAGE REQUIRED	3,818	CF
DRY STORAGE PROVIDED	5,757	CF
TRAP BOTTOM ELEVATION	547.00	FT
TRAP BOTTOM DIMENSIONS	70x34	FT x FT
RISER CREST (DRY STORAGE) ELEVATION	550.00	FT
OUTLET (WET STORAGE) ELEVATION	548.50	FT
CLEANOUT ELEVATION	547.75	FT
TOP OF EMBANKMENT ELEVATION	551.50	FT
SIDE SLOPE	3:1	H:V RATIO
EMBANKMENT TOP WIDTH	4	FT
PRINCIPAL SPILLWAY MATERIAL (BARREL, RISER, ANTI–SEEP COLLAR)	SLCPP, SLCPP, HDPE	
RISER DIAMETER	TYPE S INLET	IN
BARREL DIAMETER	15	IN
TRASH RACK DIAMETER	SEE DETAIL	IN
TRASH RACK HEIGHT	SEE DETAIL	IN
ANTI–SEEP COLLAR DIMENSIONS	6 x 6	FT
OUTLET PROTECTION – LENGTH	13	FT
OUTLET PROTECTION – WIDTH	15	FT
OUTLET PROTECTION – DEPTH	16	IN

3 OF 3

MARYLAND STANDARDS AND SPECIFICATIONS FOR SOIL EROSION AND SEDIMENT CONTROL

U.S. DEPARTMENT OF AGRICULTURE NATURAL RESOURCES CONSERVATION SERVICE | 2011 | MARYLAND DEPARTMENT OF ENVIRONMENT WATER MANAGEMENT ADMINISTRATION

G.8

DETAIL G-1-1 PIPE OUTLET SEDIMENT TRAP ST-I

STANDARD SYMBOL: ST–I

PIPE OUTLET SEDIMENT TRAP ST–I, TRAP NO. 4		
DRAINAGE AREA – INTIAL		ACRES
DRAINAGE AREA – INTERIM Maximum	0.63	ACRES
DRAINAGE AREA – FINAL		ACRES
TOTAL STORAGE REQUIRED	2,276	CF
TOTAL STORAGE PROVIDED	3,113	CF
WET STORAGE REQUIRED	1,138	CF
WET STORAGE PROVIDED	1,556	CF
DRY STORAGE REQUIRED	1,138	CF
DRY STORAGE PROVIDED	1, 557	CF
TRAP BOTTOM ELEVATION	539.00	FT
TRAP BOTTOM DIMENSIONS	46 x 17	FT x FT
RISER CREST (DRY STORAGE) ELEVATION	541.50	FT
OUTLET (WET STORAGE) ELEVATION	540.50	FT
CLEANOUT ELEVATION	539.75	FT
TOP OF EMBANKMENT ELEVATION	543.00	FT
SIDE SLOPE	3:1	H:V RATIO
EMBANKMENT TOP WIDTH	4	FT
PRINCIPAL SPILLWAY MATERIAL (BARREL, RISER, ANTI–SEEP COLLAR)	SLCPP, SLCPP, HDPE	
RISER DIAMETER	TYPE S INLET	IN
BARREL DIAMETER	15	IN
TRASH RACK DIAMETER	SEE DETAIL	IN
TRASH RACK HEIGHT	SEE DETAIL	IN
ANTI–SEEP COLLAR DIMENSIONS	5.25 x 5.25	FT
OUTLET PROTECTION – LENGTH	13	FT
OUTLET PROTECTION – WIDTH	15	FT
OUTLET PROTECTION – DEPTH	16	IN

3 OF 3

MARYLAND STANDARDS AND SPECIFICATIONS FOR SOIL EROSION AND SEDIMENT CONTROL

U.S. DEPARTMENT OF AGRICULTURE NATURAL RESOURCES CONSERVATION SERVICE | 2011 | MARYLAND DEPARTMENT OF ENVIRONMENT WATER MANAGEMENT ADMINISTRATION

G.8

HRG
HERBERT, ROWLAND & GRUBIC, INC.
5 NORTH MAIN STREET
SUITE 3
CHAMBERSBURG, PA 17201
717. 263.2070 | hrg-inc.com

SITE PLAN
FOR
MERITUS SCHOOL OF OSTEOPATHIC MEDICINE
GRADUATE STUDENT HOUSING
1500 MT. AETNA ROAD
HAGERSTOWN, MD 21742
TAX MAP–50 GRID: 14 PARCEL: 1207
HAGERSTOWN WASHINGTON COUNTY MARYLAND

PROFESSIONAL CERTIFICATION:

STATE OF MARYLAND — SCOTT BEAR — 59144 — PROFESSIONAL ENGINEER

I HEREBY CERTIFY THAT THESE DOCUMENTS WERE PREPARED OR APPROVED BY ME, AND THAT I AM DULY LICENSED PROFESSIONAL ENGINEER UNDER THE LAWS OF THE STATE OF MARYLAND. LICENSE NO. 59144, EXP. DATE: 2024–03–26

HRG PROJECT NUMBER:	R003887.0427
PLAN DATE:	2023.09.01
DRAWING SCALE:	AS SHOWN
PROJ. MANAGER:	SBB

REVISIONS

NO.	DATE	DESCRIPTION
1	2024.01.16	PER VARIOUS REVIEW AGENCY COMMENTS
2		
3		
4		
5		
6		
7		
8		
9		

SHEET TITLE:
E&S CONTROL NOTES & DETAILS

SP-23-034

SHEET: CD-13

STANDARD INLET PROTECTION		
Structure ID	Drainage Area (Acres)	TYPE
I-1.2	0.07	A
I-1.5	0.90	B
I-1.6	0.30	B
I-1.7	0.05	A
I-1.8	0.12	A
I-11.2	0.22	A
I-11.3	0.10	A
I-11.4	0.06	A
I-11.5	0.08	A
I-11A.2	0.18	A
I-11A.3	0.04	A
I-12A.2	0.05	A
I-13.2	0.85	B
I-13.3	0.49	B
I-2.2	0.28	B
I-2.2A	0.03	A
I-2.2A.1	0.15	A
I-2.2B	0.23	A
I-2.2B.1	0.23	A
I-2.3	0.09	A
I-2.5	0.18	A
I-2.6	0.02	A
I-4.2	0.46	B
I-5.2	0.09	A
I-5.3	0.16	A
I-5.3A	0.00	A
I-5.4	0.17	A
I-5.5	0.15	A
I-5.6	0.10	A
I-6.1	0.00	A
YD-10B.1	0.01	A
YD-10C.1	0.02	A
YD-11.6	0.03	A
YD-12B.1	0.02	A
YD-7.1	0.14	A
YD-8A.1	0.01	A
YD-8A.2	0.01	A
YD-8B.1	0.00	A

ROCK OUTLET PROTECTION SCHEDULE - 10-YEAR										
Structure	Type	Pipe Dia. (in)	Riprap	La (ft)	W (ft)	H (ft)	D50	Q (cfs)	V (fps)	Flow Depth (ft)
EW-1	ROP 3	30	Class I	10.5	13	1.6	9.5"	19.8	5.5	1.6
EW-1.4	ROP 3	15	Class I	7	8.25	0.9	9.5"	3.3	3.5	0.9
EW-2	ROP 3	18	Class I	10	11.5	1.3	9.5"	9.6	6.2	1.3
EW-2.1	ROP 3	24	Class I	10	12	1.5	9.5"	7.7	4.0	1.5
EW-2.4	ROP 2	15	Class I	7	8.25	0.9	9.5"	0.6	0.7	0.9
EW-4	ROP 1	15	Class I	9	10.25	1.0	9.5"	3.0	2.8	1.0
EW-4.1	ROP 3	15	Class I	8	9.25	1.1	9.5"	2.0	2.8	1.1
EW-5A	ROP 3	24	Class I	13	15	2.0	9.5"	10.2	4.8	2.0
EW-6	ROP 3	18	Class I	10	11.5	1.4	9.5"	7.0	5.1	1.4
EW-11	ROP 1	24	Class I	10	12	1.5	9.5"	14.5	5.7	1.5
EW-11.1	ROP 3	15	Class I	8	9.25	1.1	9.5"	2.2	3.1	1.1
EW-11A.1	ROP 3	15	Class I	8	9.25	1.1	9.5"	1.1	2.1	1.1
EW-12A.1	ROP 3	15	Class I	7	8.25	1.0	9.5"	0.3	1.3	1.0
EW-13.1	ROP 3	18	Class I	8	9.5	1.1	9.5"	5.8	4.4	1.1
EW-BP1	ROP 2	15	Class I	7	8.25	1.0	9.5"	4.3	4.5	1.0
EW-BP3	ROP 2	15	Class I	8	9.25	1.3	9.5"	4.8	4.5	1.3
EW-BP5	ROP 3	24X38	Class I	10	13.167	1.4	9.5"	17.5	5.4	1.4

SWALE DESIGN SCHEDULE - 10-YEAR										
Swale	Depth, D (ft)	Bottom Width, W (ft)	Top Width (ft)	Side Slopes, Z1, Z2:1	Flow (cfs)	Velocity (ft/s)	Flow Depth (ft)	Type	Matting	Bed Slope
TS-1A	2	4	16	3,3	1.49	2.22	0.2	A-1	Mulch	2.0%
TS-1B	2	4	16	3,3	1.49	2.51	0.1	A-2	N.A.G. S75	4.3%
TS-1C	2	4	16	3,3	1.49	2.38	0.2	A-1	Mulch	2.5%
TS-2A	2	4	16	3,3	1.65	1.84	0.2	A-1	Mulch	1.0%
TS-2B	2	4	16	3,3	1.65	1.84	0.2	A-1	Mulch	1.0%
TS-2C	1.5	4	13	3,3	1.65	2.26	0.2	A-1	Mulch	2.8%
TS-3A	1.5	4	13	3,3	9.1	4.34	0.5	A-2	N.A.G. SC250	3.5%
TS-3B	1.5	4	13	3,3	9.1	5.21	0.4	A-2	N.A.G. SC250	6.0%
TS-3C	1.5	4	13	3,3	9.1	3.19	0.7	A-1	Mulch	1.0%
PS-1	1.5	2	16	3,3	0.59	1.4	0.1	n/a	Mulch	2.5%

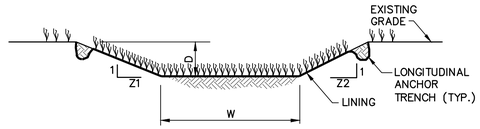

VEGETATED SWALE DETAIL

NOT TO SCALE

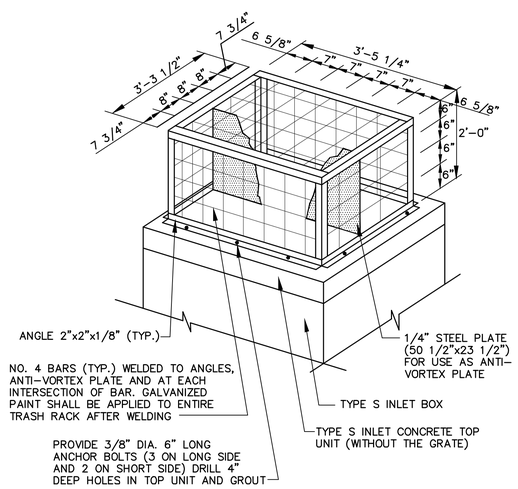

NOTE: TRASH RACK TO BE CORROSION RESISTANT AND REMOVABLE WITH CORROSION RESISTANCE HARDWARE.

OVERFLOW TRASH RACK WITH ANTI-VORTEX PLATE

NOT TO SCALE

SILT FENCE SCHEDULE				
Silt Fence	Type	Site Slope Z:1	Flow Length (ft)	Fence Length (ft)
1	SSF	3	28	209
2	SSF	3	28	87
3	SSF	6	184	212
4	SSF	3	51	59
5	SSF	3	67	100
6	SSF	3	69	69
7	SSF	3	31	120
8	SSF	3	23	58
9	SSF	3	46	37
10	SSF	3	59	88
11	SSF	3	18	112
12	SSF	3	23	46
13	SSF	3	23	51
14	SSF	3.7	33	100
15	SF	7	72	51
16	SF	10	74	200
17	SF	5.2	63	24
18	SSF	3.4	25	250
19	SSF	2.8	10	38
20	SSF	2	31	26
21	SSF	3	44	29
22	SSF	3	27	97
23	SSF	3	15	76
24	SSF	33	260	266
1A	SSF	30	275	44
1B	SSF	3	18	23
1C	SSF	3	12	30
2A	SSF	3	17	36
3A	SSF	6	184	82
17A	SSF	3	50	73
20A	SSF	3	19	24
22A	SSF	3	16	48

DETAIL G-2-1 TYPICAL ANTI-SEEP COLLARS

STANDARD SYMBOL

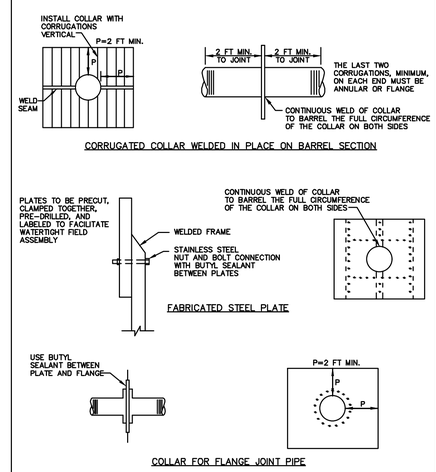

MARYLAND STANDARDS AND SPECIFICATIONS FOR SOIL EROSION AND SEDIMENT CONTROL

U.S. DEPARTMENT OF AGRICULTURE NATURAL RESOURCES CONSERVATION SERVICE	2011	MARYLAND DEPARTMENT OF ENVIRONMENT WATER MANAGEMENT ADMINISTRATION

DETAIL G-2-6 SEDIMENT BASIN SCHEMATIC HORIZONTAL DRAW-DOWN DEVICE

STANDARD SYMBOL HDDD

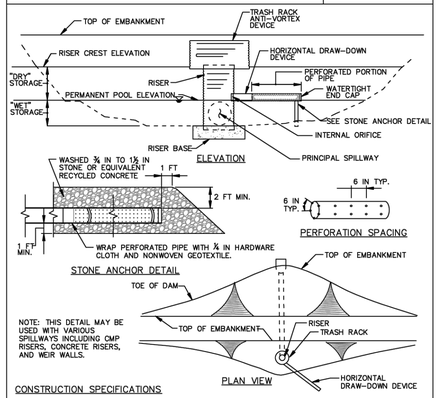

CONSTRUCTION SPECIFICATIONS

1. PERFORATE PIPE WITH 1 INCH DIAMETER PERFORATIONS SPACED 6 INCHES APART LONGITUDINALLY AND RADIALLY OR IN ACCORDANCE WITH APPROVED PLAN.
2. WRAP THE PERFORATED PORTION OF THE DRAW-DOWN DEVICE FIRST WITH ¼ INCH GALVANIZED HARDWARE CLOTH, THEN WITH NONWOVEN GEOTEXTILE. USE NONWOVEN GEOTEXTILE AS SPECIFIED IN SECTION H-1 MATERIALS. DO NOT WRAP WITH MORE THAN ONE LAYER OF GEOTEXTILE.
3. AS AN ALTERNATE TO STONE ANCHORING, SECURE DRAW-DOWN DEVICE WITH TWO 1 INCH STEEL ANGLES SET 3 FEET MINIMUM INTO THE GROUND ATTACHED TO DRAW-DOWN DEVICE BY A 1 INCH WIDE GALVANIZED STEEL STRAP OR 12 GAUGE OR HEAVIER WIRE.
4. REMOVE SEDIMENT WHEN IT ACCUMULATES TO CLEANOUT ELEVATION (50% OF THE WET STORAGE DEPTH). DEPOSIT REMOVED SEDIMENT IN AN APPROVED AREA IN A SUCH A MANNER THAT IT WILL NOT ERODE. MAINTAIN WATER TIGHT CONNECTIONS. REPLACE GEOTEXTILE AROUND PERFORATED RISER IF DRY STORAGE VOLUME DOES NOT DRAW DOWN WITHIN 10 HOURS.

MARYLAND STANDARDS AND SPECIFICATIONS FOR SOIL EROSION AND SEDIMENT CONTROL

U.S. DEPARTMENT OF AGRICULTURE NATURAL RESOURCES CONSERVATION SERVICE	2011	MARYLAND DEPARTMENT OF ENVIRONMENT WATER MANAGEMENT ADMINISTRATION

G.48

ANTI-SEEP COLLAR DESIGN SCHEDULE						
Facility	SWM-1 / ST-3	SWM-2B	SWM-4 / ST-4	SWM-11 / ST-2	SWM-12B	SWM-13
Pipe Diameter (ft)	1.25	1.5	1.25	2	1.5	1.5
Collar Size (ft x ft)	5.25	6	5.25	6	7	6
# of Collars, N	2	2	1	2	2	2
First Collar Spacing (ft)	10	15	10	10	15	15
Collar Spacing (ft)	10	24	N/A	10	15	15
Total Spacing (ft)	20	39	10	20	30	30

HORIZONTAL DRAWDOWN DEVICE SCHEDULE			
Sediment Trap No.	2	3	4
Wet Storage/Orifice El.	541.00	548.50	540.50
Pipe Diameter (in)	6	6	6
# of Perforated Rows	3	3	2
Min. # of Perforations/Row	8	6	5
Min. Perforated Pipe Length (ft)	4.5	3.5	3
Perforation Spacing (in)	6	6	6

HRG
HERBERT, ROWLAND & GRUBIC, INC.
5 NORTH MAIN STREET
SUITE 3
CHAMBERSBURG, PA 17201
717. 263.2070 | hrg-inc.com

SITE PLAN
FOR
MERITUS SCHOOL OF OSTEOPATHIC MEDICINE
GRADUATE STUDENT HOUSING
1500 MT. AETNA ROAD
HAGERSTOWN, MD 21742
TAX MAP-50 GRID: 14 PARCEL: 1207
HAGERSTOWN WASHINGTON COUNTY MARYLAND

PROFESSIONAL CERTIFICATION:

STATE OF MARYLAND SCOTT BERG 59144 PROFESSIONAL ENGINEER

I HEREBY CERTIFY THAT THESE DOCUMENTS WERE PREPARED OR APPROVED BY ME, AND THAT I AM DULY LICENSED PROFESSIONAL ENGINEER UNDER THE LAWS OF THE STATE OF MARYLAND. LICENSE NO. 59144, EXP. DATE: 2024-03-28

HRG PROJECT NUMBER: R003887.0427
PLAN DATE: 2023.09.01
DRAWING SCALE: AS SHOWN
PROJ. MANAGER: SBB

REVISIONS

NO.	DATE	DESCRIPTION
1	2024.01.16	PER VARIOUS REVIEW AGENCY COMMENTS
2		
3		
4		
5		
6		
7		
8		
9		

SHEET TITLE:
E&S CONTROL NOTES & DETAILS

SP-23-034

SHEET: CD-14

GENERAL NOTES

1. THE WORK SHALL COMPLY WITH APPLICABLE CODES, RULES, AND REGULATIONS OF THE JURISDICTIONS HAVING AUTHORITY.
2. PRIOR TO COMMENCEMENT OF ANY PORTION OF THE WORK, NOTIFY THE LANDSCAPE ARCHITECT IMMEDIATELY WHEN FOLLOWING ISSUES ARE NOTED: ANY DISCREPANCIES NOTED AMONG OR BETWEEN THE CONTRACT DOCUMENTS, OWNER-PROVIDED INFORMATION, SITE CONDITIONS, MANUFACTURER RECOMMENDATIONS, OR CODES, REGULATIONS, OR RULES OF JURISDICTIONS HAVING AUTHORITY;
3. PRIOR TO COMMENCEMENT OF ANY PORTION OF THE WORK, BECOME FAMILIAR WITH THE CONTRACT DOCUMENTS, OWNER-PROVIDED INFORMATION, AND SITE CONDITIONS, INCLUDING TAKING FIELD MEASUREMENTS AS NECESSARY.
4. SECURE AND PAY FOR ALL PERMITS, FEES, LICENSES, AND INSPECTIONS NECESSARY FOR PROPER EXECUTION AND COMPLETION OF THE WORK.
5. DO NOT SCALE THE DRAWINGS.
6. SITE PLAN INFORMATION CONTAINED HEREIN, INCLUDING BUT NOT LIMITED TO DIMENSIONS AND LOCATION OF EXISTING UTILITIES, IS BASED UPON SURVEY INFORMATION PROVIDED BY OTHERS. THE LANDSCAPE ARCHITECT TAKES NO RESPONSIBILITY FOR ITS ACCURACY.
7. CONTRACTOR SHALL VERIFY LOCATION OF EXISTING UTILITIES. CARE SHOULD BE TAKEN TO AVOID DAMAGE TO OR DISTURBANCE OF EXISTING UTILITIES.
8. WHERE POSSIBLE, RUN IRRIGATION AND ELECTRICAL CONDUIT UNDER DECKING OR PLANTING AREAS.

GRAPHIC SYMBOLS

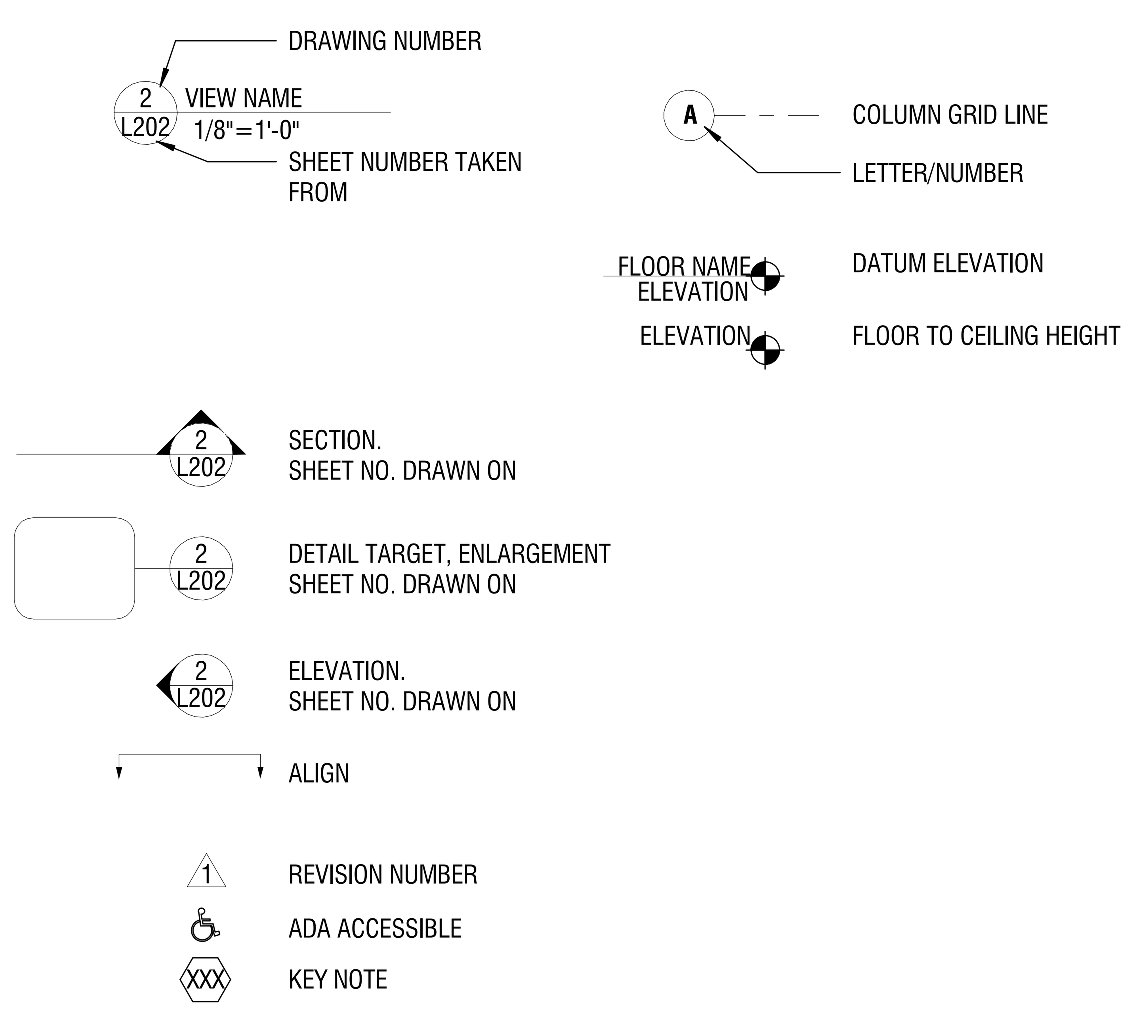

REFERENCE VIEW

LANDSCAPE SITE PLAN SHEET INDEX

57 OF 81	L001	LANDSCAPING GENERAL NOTES
58 OF 81	L003	ZONING DIAGRAMS
59 OF 81	L004	MITIGATION PLAN - OVERALL
60 OF 81	L005	MITIGATION PLAN - SW ENLARGEMENT
61 OF 81	L006	MITIGATION PLAN - E ENLARGEMENT
62 OF 81	L007	MITIGATION PLAN - MASTER PLANT SCHEDULE
63 OF 81	L100	LANDSCAPE SITE PLAN
64 OF 81	L181	TREE PLAN - GRADUATE WAY
65 OF 81	L182	TREE PLAN - COURTYARD
66 OF 81	L183	TREE PLAN - N PARKING LOT
67 OF 81	L184	TREE PLAN - W PARKING LOT
68 OF 81	L185	TREE PLAN - SW PARKING LOT
69 OF 81	L186	TREE PLAN - SE PARKING LOT
70 OF 81	L187	TREE PLAN - E ENTRY DRIVE
71 OF 81	L188	SWM LANDSCAPE KEY PLAN
72 OF 81	L188A	PLANTING PLAN - SWM 1, 2, 3, 4
73 OF 81	L188B	PLANTING PLAN - SWM 5, 6, 7, 8, 9, 10
74 OF 81	L188C	PLANTING PLAN - SWM 11, 12
75 OF 81	L188D	PLANTING PLAN - SWM 13, 14
76 OF 81	L501	PAVING DETAILS
77 OF 81	L504	STAIR DETAILS
78 OF 81	L505	STAIR DETAILS
79 OF 81	L580	PLANTING DETAILS
80 OF 81	L581	TREE PROTECTION DETAILS
81 OF 81	L680	SITE PLAN PLANT SCHEDULE

LANDSCAPE MASTER SHEET INDEX

L001	LANDSCAPE GENERAL NOTES
L002	MATERIALS SCHEDULE
L003	ZONING DIAGRAMS
L004	MITIGATION PLAN - OVERALL
L005	MITIGATION PLAN - SW ENLARGEMENT
L006	MITIGATION PLAN - E ENLARGEMENT
L007	MITIGATION PLAN - MASTER PLANT SCHEDULE
L100	LANDSCAPE SITE PLAN
L101	LANDSCAPE PLAN - GRADUATE WAY
L102	LANDSCAPE PLAN - COURTYARD
L103	LANDSCAPE PLAN - N PARKING LOT
L104	LANDSCAPE PLAN - W PARKING LOT
L105	LANDSCAPE PLAN - SW PARKING LOT
L106	LANDSCAPE PLAN - SE PARKING LOT
L107	LANDSCAPE PLAN - E ENTRY DRIVE
L110A	MATERIALS PLAN - SOUTH COURTYARD
L110B	MATERIALS PLAN - MID-SOUTH CTYD
L110C	MATERIALS PLAN - MID-NORTH CTYD
L110D	MATERIALS PLAN - NORTH COURTYARD
L110E	MATERIALS PLAN - DOG PARK
L120A	LAYOUT PLAN - SOUTH COURTYARD
L120B	LAYOUT PLAN - MID-SOUTH CTYD
L120C	LAYOUT PLAN - MID-NORTH CTYD
L120D	LAYOUT PLAN - NORTH COURTYARD
L120E	LAYOUT PLAN - DOG PARK
L130	FURNITURE PLAN - COURTYARD
L170	IRRIGATION DIAGRAM
L180	PLANTING KEY PLANS
L181	TREE PLAN - GRADUATE WAY
L181A	PLANTING PLAN - NW GRADUATE WAY
L181B	PLANTING PLAN - NE GRADUATE WAY
L181C	PLANTING PLAN - SW GRADUATE WAY
L181D	PLANTING PLAN - SE GRADUATE WAY
L182	TREE PLAN - COURTYARD
L182A	PLANTING PLAN - SOUTH COURTYARD
L182B	PLANTING PLAN - MID-SOUTH COURTYARD
L182C	PLANTING PLAN - MID-NORTH COURTYARD
L182D	PLANTING PLAN - NORTH COURTYARD
L182E	PLANTING PLAN - DOG PARK
L183	TREE PLAN - N PARKING LOT
L184	TREE PLAN - W PARKING LOT
L185	TREE PLAN - SW PARKING LOT
L186	TREE PLAN - SE PARKING LOT
L186A	PLANTING PLAN - SE PARKING ENTRY
L187	TREE PLAN - E ENTRY DRIVE
L188	SWM LANDSCAPE KEY PLAN
L188A	PLANTING PLAN - SWM 1, 2, 3
L188B	PLANTING PLAN - SWM 5, 7, 8, 9, 10
L188C	PLANTING PLAN - SWM 11, 12
L188D	PLANTING PLAN - SWM 4, 13
L190	CONCEPT LIGHTING PLAN - COURTYARD
L501	PAVING DETAILS
L502	FENCE DETAILS
L503	FENCE DETAILS
L504	STAIR DETAILS
L505	STAIR DETAILS
L506	WALL DETAILS
L507	SITE DETAILS
L508	FURNISHING DETAILS
L509	GRILL DETAILS
L510	FIREPIT DETAILS
L511	TRASH ENCLOSURE DETAILS
L580	PLANTING DETAILS
L581	TREE PROTECTION DETAILS
L590	LIGHTING DETAILS
L591	LIGHTING CUTSHEETS
L592	LIGHTING CUTSHEETS
L680	SITE PLAN PLANT SCHEDULE
L681	MASTER PLANT SCHEDULES
L682	MEADOW NOTES

LANDSCAPE ABBREVIATIONS

AB	ANCHOR BOLT
ADDL	ADDITIONAL
AD	AREA DRAIN
ADJ	ADJUSTABLE
AFF	ABOVE FINISH FLOOR
ALT	ALTERNATE
APPROX	APPROXIMATE
ARCH	ARCHITECT (URAL)
BC	BOTTON OF CURB
BD	BOARD
BITUM	BITUMINOUS
BLDG	BUILDING
BLKG	BLOCKING
BM	BEAM
BO	BOTTOM OF
BOT	BOTTOM
BS	BOTTOM OF STAIR
BW	BOTTOM OF WALL
C	CHANNEL
CB	CATCH BASIN
CFIOI	CONTRACTOR FURNISHED; OWNER INSTALLED
CIP	CAST-IN-PLACE (CONCRETE)
CL	CENTERLINE
CLR	CLEAR
CMU	CONCRETE MASONRY UNIT
CO	CLEANOUT
COL	COLUMN
CONC	CONCRETE
CONT	CONTINUOUS
CONTR	CONTRACT (OR)
COORD	COORDINATE
DEMO	DEMOLISH, DEMOLITION
DET	DETAIL
DIA	DIAMETER
DIM	DIMENSION
DN	DOWN
DR	DOOR
DS	DOWNSPOUT
DWG	DRAWING
E	EAST
EA	EACH
EJ	EXPANSION JOINT
EL	ELEVATION
ELEC	ELECTRIC (AL)
ENCL	ENCLOSE (URE)
EQ	EQUAL
EQUIP	EQUIPMENT
ESMT	EASEMENT
EST	ESTIMATE (D)
EW	EACHWAY
EXH	EXHAUST
EXIST	EXISTING
EXP	EXPANSION
EXT	EXTERIOR
FCTY	FACTORY
FDN	FOUNDATION
FIN	FINISH (ED)
FL	FLASHING
FLR	FLOOR
FOG	FACE OF CONCRETE
FOF	FACE OF FINISH
FOM	FACE OF MASONRY
FOS	FACE OF STUDS
FPL	FIREPLACE
FRMG	FRAMING
FT	FOOT, FEET
FTG	FOOTING
FURN	FURNITURE
FUT	FUTURE
GA	GAGE
GALV	GALVANIZED, GALVANIC
GAR	GARAGE
GEN	GENERAL
GL	GLASS
GLU LAM	GLUED LAMINATED WOOD
GOVT	GOVERNMENT
H	HIGH
HB	HOSE BIBB
HC	HANDICAP
HDW	HARDWARE
HDWD	HARDWOOD
HORIZ	HORIZONTAL
HP	HIGH POINT
HT	HEIGHT
ID	INSIDE DIAMETER
INCL	INCLUDING (ED)
INFO	INFORMATION
INSUL	INSULATION
INT	INTERIOR
L	LONG
LH	LEFTHAND
LNDSCP	LANDSCAPE
LOG	LOCATION
LP	LOW POINT
LRG	LARGE
LT	LIGHT
LTG	LIGHTING
MAS	MASONRY
MATL	MATERIAL
MAX	MAXIMUM
MECH	MECHANICAL
MEMB	MEMBRANE
MFD	MANUFACTURED
MF	MILL FINISH
MFR	MANUFACTURE (R)
MIN	MINIMUM
MIRR	MIRROR
MISC	MISCELLANEOUS
MR	MOISTURE RESISTANT
MTL	METAL
MULT	MULTIPLE
N	NORTH
NA	NOT APPLICABLE
NIC	NOT IN CONTRACT
NO	NUMBER
NOM	NOMINAL
NTS	NOTTOSCALE
OA	OVERALL
OC	ON CENTER
OD	OUTSIDE DIAMETER, DIMENSION
OF	OUTSIDE FACE
OF/CI	OWNER FURNISHED; CONTRACTOR INSTALLED
OFIOI	OWNER FURNISHED; OWNER INSTALLED
OH	OVERHANG
OPNG	OPENING
OPP	OPPOSITE
ORD	OVERFLOW ROOF DRAIN
OVHD	OVERHEAD
PERIM	PERIMETER
PERM	PERMANENT
PERP	PERPENDICULAR
PA	PLANTING AREA
PH	PHASE
PL	PROPERTY LINE
PLWD	PLYWOOD
PRCST	PRECAST
PREFAB	PREFABRICATED
PRELIM	PRELIMINARY
PRKG	PARKING
PROJ	PROJECT
PROP	PROPERTY
PT	PRESSURE TREATED
PAT	PATTERN
PBD	PARTICLE BOARD
PCP	PORTLAND CEMENT PLASTER
PED	PEDESTAL
PERF	PERFORATED
POB	POINT OF BEGINNING
POC	POINT OF CONNECTION
PVG	PAVING
R	RADIUS, RISER
RC	REINFORCED CONCRETE
RD	ROOF DRAIN, ROAD
REF	REFER (ENCE)
REINF	REINFORCE (D), (ING)
REQD	REQUIRED
RESIL	RESILIENT
REV	REVISION (S), REVISED
RFG	ROOFING
RM	ROOM
ROW	RIGHT OF WAY
RT	RIGHT
S	SOUTH
SCHED	SCHEDULE
SD	STORM DRAIN
SF	SQUARE FOOT (FEET)
SHT	SHEET
SIM	SIMILAR
SP	STANDPIPE
SPEC	SPECIFICATION
SQ	SQUARE
SQIN	SQUARE INCH
SS	SANITARY SEWER, STAINLESS STEEL
ST	STAIRS, STREET
STD	STANDARD
STOR	STORAGE
STRUCT	STRUCTURE (AL)
SV	SHEET VINYL
SYS	SYSTEM
T	TREAD
TEL	TELEPHONE
TEMP	TEMPORARY
TFF	TOP OF FINISH FLOOR
THK	THICK (NESS)
THRU	THROUGH
TC	TOP OF CURB
TD	TRENCH DRAIN
TS	TOP OF STAIR
TW	TOP OF WALL
TYP	TYPICAL
UNFIN	UNFINISH(ED)
UON	UNLESS OTHERWISE NOTED
UTIL	UTILITY
VEH	VEHICLE
VERT	VERTICAL
VIN	VINYL
W	WEST, WIDE
W/	WITH
W/O	WITHOUT
WC	WATER CLOSET
WD	WOOD
WR	WEATHER RESISTANT, WATER REPELLENT

PROJECT NAME
MERITUS GRAD HOUSING

PROJECT ADDRESS
1500 MT AETNA RD, HAGERSTOWN, MD 21742

DC Project No. 23-P-0088

Owner Project No.

OWNER / DEVELOPER
MERITUS/ RADNOR

PROJECT SUBMISSION

PERMIT SUBMISSION

REVISION#	ISSUED FOR	DATE
	SCHEMATIC DESIGN	06/02/2023
	DESIGN DEVELOPMENT	07/28/2023
	SITE PLAN	09/01/2023
	50% CD	10/16/2023
	PERMIT SUBMISSION	12/11/2023

Design Collective
ARCHITECTURE PLANNING INTERIORS
LANDSCAPE ARCHITECTURE GRAPHICS
100 East Pratt Street, 18th Floor
Baltimore, Maryland 21202
P 410 685 6655 | www.designcollective.com

©DESIGN COLLECTIVE,INC. ALL RIGHTS RESERVED

CONSULTANT

KEY PLAN

SEAL

AFFIRMATION

SHEET TITLE
LANDSCAPE GENERAL NOTES

SCALE
1/4" = 1'-0"

SHEET NUMBER
L001

12/11/2023 5:31:12 PM

1 L003 ZONING DIAGRAM
1" = 60'-0"

N

22.12 OFF-STREET PARKING REQUIREMENTS

PARKING LOT A PARKING LOT IMPERVIOUS AREA: 61,445 SF

MINIMUM LANDSCAPING AREA REQUIRED: (5% OF TOTAL IMPERVIOUS AREA) 61,445 x 0.05 =	3,073 SF
MINIMUM LANDSCAPING AREA PROVIDED:	11,229 SF

MINIMUM TREES REQUIRED: (1 TREE / 300SF OF REQUIRED LANDSCAPE AREA) 3,073 / 300SF =	11 TREES
MINIMUM TREES PROVIDED:	22 TREES

PARKING LOT B PARKING LOT IMPERVIOUS AREA: 32,988 SF

MINIMUM LANDSCAPING AREA REQUIRED: (5% OF TOTAL IMPERVIOUS AREA) 32,988 x 0.05 =	1,650 SF
MINIMUM LANDSCAPING AREA PROVIDED:	10,010 SF

MINIMUM TREES REQUIRED: (1 TREE / 300SF OF REQUIRED LANDSCAPE AREA) 1,650 / 300SF =	6 TREES
MINIMUM TREES PROVIDED:	14 TREES

PARKING LOT C PARKING LOT IMPERVIOUS AREA: 77,592 SF

MINIMUM LANDSCAPING AREA REQUIRED: (5% OF TOTAL IMPERVIOUS AREA) 77,592 x 0.05 =	3,880 SF
MINIMUM LANDSCAPING AREA PROVIDED:	5,238 SF

MINIMUM TREES REQUIRED: (1 TREE / 300SF OF REQUIRED LANDSCAPE AREA) 3,880 / 300SF =	13 TREES
MINIMUM TREES PROVIDED:	35 TREES

PROJECT NAME
MERITUS GRAD HOUSING

PROJECT ADDRESS
1500 MT AETNA RD, HAGERSTOWN, MD 21742

DC Project No. 23-P-0088

Owner Project No.

OWNER / DEVELOPER
MERITUS/ RADNOR

PROJECT SUBMISSION
PERMIT SUBMISSION

REVISION#	ISSUED FOR	DATE
	SCHEMATIC DESIGN	06/02/2023
	DESIGN DEVELOPMENT	07/28/2023
	SITE PLAN	09/01/2023
	50% CD	10/16/2023
	PERMIT SUBMISSION	12/11/2023

Design Collective
ARCHITECTURE PLANNING INTERIORS
LANDSCAPE ARCHITECTURE GRAPHICS
100 East Pratt Street, 18th Floor
Baltimore, Maryland 21202
P 410 685 6655 | www.designcollective.com

©DESIGN COLLECTIVE, INC. ALL RIGHTS RESERVED

CONSULTANT

KEY PLAN

SEAL

AFFIRMATION

SHEET TITLE
ZONING DIAGRAMS

SCALE
As indicated

SHEET NUMBER
L003

12/11/2023 5:17:22 PM

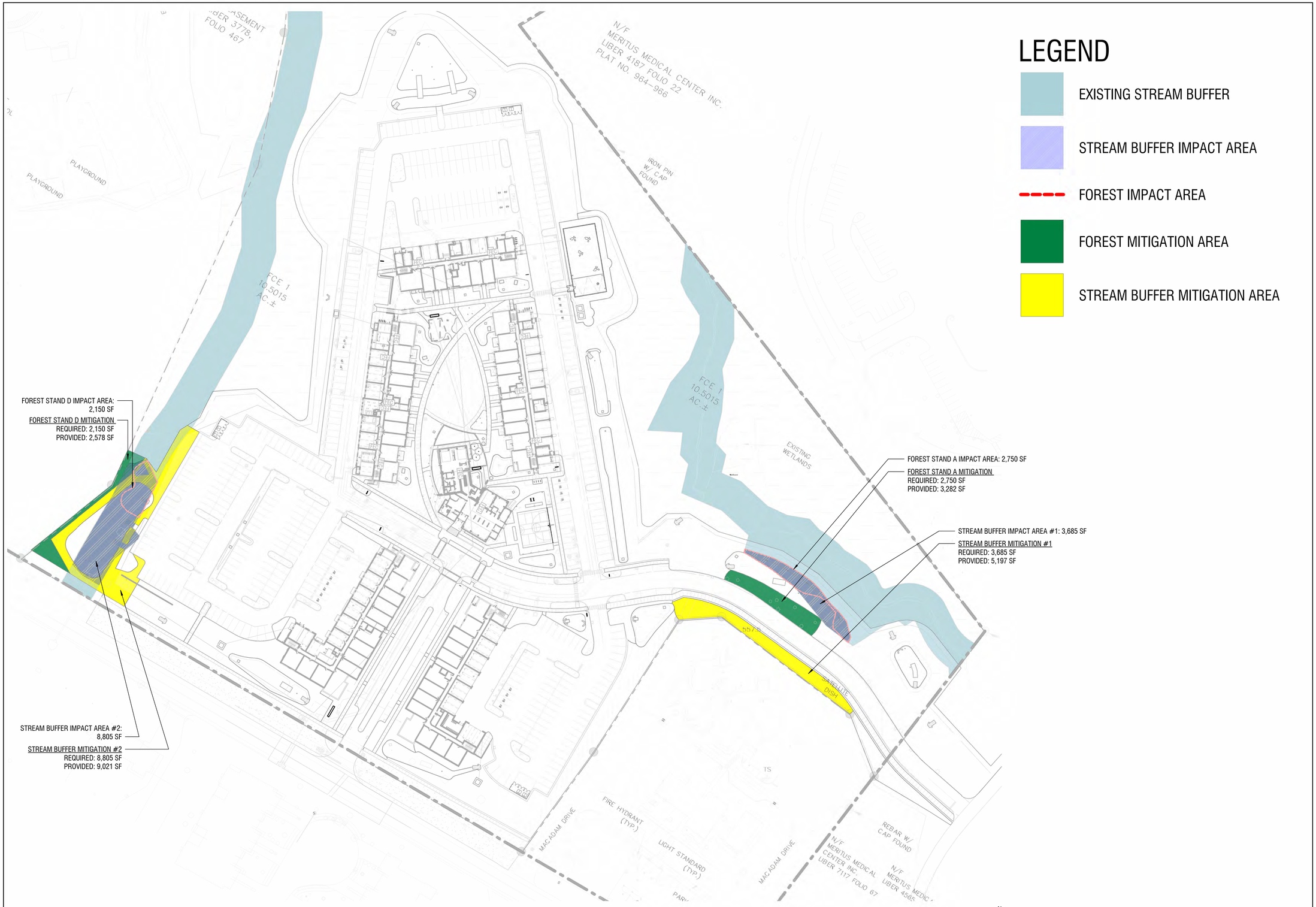

1 L004 LANDSCAPE MITIGATION PLAN
1" = 60'-0"

PROJECT NAME
MERITUS GRAD HOUSING

PROJECT ADDRESS
1500 MT AETNA RD, HAGERSTOWN, MD 21742

DC Project No. 23-P-0088
Owner Project No.

OWNER / DEVELOPER
MERITUS/ RADNOR

PROJECT SUBMISSION
PERMIT SUBMISSION

REVISION#	ISSUED FOR	DATE
	DESIGN DEVELOPMENT	07/28/2023
	50% CD	10/16/2023
	PERMIT SUBMISSION	12/11/2023

Design Collective
ARCHITECTURE PLANNING INTERIORS
LANDSCAPE ARCHITECTURE GRAPHICS
900 East Pratt Street, 10th Floor
Baltimore, Maryland 21202
P 410 685 6655 | www.designcollective.com

© DESIGN COLLECTIVE, INC. ALL RIGHTS RESERVED

CONSULTANT

KEY PLAN

SEAL

AFFIRMATION

SHEET TITLE
MITIGATION PLAN - OVERALL

SCALE
As indicated

SHEET NUMBER
L004

SP-23-034

1
L005

SOUTH-WEST MITIGATION PLANTING

1" = 10'-0"

PROJECT NAME
MERITUS GRAD HOUSING

PROJECT ADDRESS
1500 MT AETNA RD, HAGERSTOWN, MD 21742

DC Project No. 23-P-0088

Owner Project No.

OWNER / DEVELOPER
MERITUS/ RADNOR

PROJECT SUBMISSION

PERMIT SUBMISSION

REVISION#	ISSUED FOR	DATE
	DESIGN DEVELOPMENT	07/28/2023
	50% CD	10/16/2023
	PERMIT SUBMISSION	12/11/2023

Design Collective
ARCHITECTURE PLANNING INTERIORS
LANDSCAPE ARCHITECTURE GRAPHICS
100 East Pratt Street, 18th Floor
Baltimore, Maryland 21202
P 410 685 6655 | www.designcollective.com

©DESIGN COLLECTIVE,INC. ALL RIGHTS RESERVED

CONSULTANT

KEY PLAN

SEAL

AFFIRMATION

SHEET TITLE
MITIGATION PLAN - SW ENLARGEMENT

SCALE
1" = 10'-0"

SHEET NUMBER
L005

SP-23-034

12/11/2023 5:31:18 PM

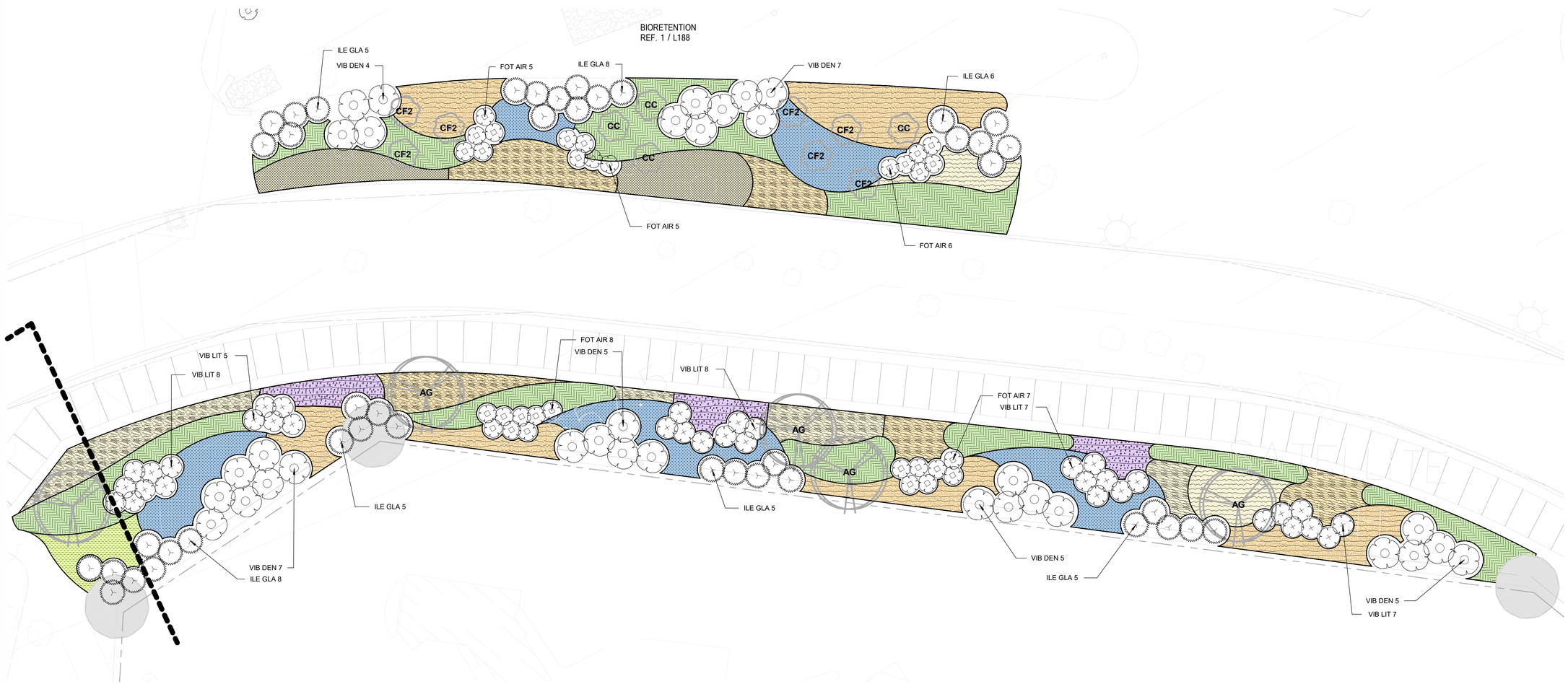

1 L006 SOUTH-WEST PARKING LOT
1" = 10'-0"

PROJECT NAME
MERITUS GRAD HOUSING

PROJECT ADDRESS
1500 MT AETNA RD, HAGERSTOWN, MD 21742

DC Project No. 23-P-0088

Owner Project No.

OWNER / DEVELOPER
MERITUS/ RADNOR

PROJECT SUBMISSION
PERMIT SUBMISSION

REVISION#	ISSUED FOR	DATE
	DESIGN DEVELOPMENT	07/28/2023
	50% CD	10/16/2023
	PERMIT SUBMISSION	12/11/2023

Design Collective
ARCHITECTURE PLANNING INTERIORS
LANDSCAPE ARCHITECTURE GRAPHICS
100 East Pratt Street, 18th Floor
Baltimore, Maryland 21202
P 410 685 6655 | www.designcollective.com

©DESIGN COLLECTIVE, INC. ALL RIGHTS RESERVED

CONSULTANT

KEY PLAN

SEAL

AFFIRMATION

SHEET TITLE
MITIGATION PLAN - E ENLARGEMENT

SCALE
1" = 10'-0"

SHEET NUMBER
L006

SP-23-034

12/11/2023 5:31:21 PM

MASTER SCHEDULE - MITIGATION PLANTING

Count	Plant Code	Botanical Name	Common Name	LAFX Field1	LAFX Field2	LAFX Remarks
Evergreen Trees						
3	PO	Picea omorika	Serbian Spruce	B & B	12-15` H	
Ornamental Trees						
5	AG	Amelanchier x grandiflora `Autumn Brilliance`	Serviceberry	B & B	10-12` HT.	
3	CF	Cornus florida `Appalachian Joy`	Appalachian Joy Dogwood	B & B	-	Specimen; matched; multi-stem, 3-4 trunks; full & symmetrical canopy
Site Deciduous Trees						
4	BN2	Betula nigra	River Birch Multi-Trunk			Specimen; matched; full & symmetrical canopy
34	CC	Cercis canadensis	Eastern Redbud Multi-trunk			<varies>
13	CF2	Cornus florida	Flowering Dogwood			Specimen; matched; full & symmetrical canopy
3	TA	Tilia americana	American Linden			Specimen; matched; full & symmetrical canopy
Trees						
1	NS	Nyssa sylvatica	Black Gum	B & B	3"Cal	Specimen; matched; full & symmetrical canopy
3	QC	Quercus coccinea	Scarlet Oak	B & B	3"Cal	Specimen; matched; full & symmetrical canopy
1	UP	Ulmus americana `Princeton`	Princeton American Elm	B & B	3"Cal	Specimen; matched; full & symmetrical canopy
Shrub						
94	FOT AIR	Fothergilla gardenii `Mt. Airy`	Mt. Airy Dwarf Witchalder	#10	42" O.C.	
97	ILE GLA	Ilex glabra	Inkberry Holly	36" HT.	5` O.C.	
57	VIB DEN	Viburnum dentatum `Arrowwood`	Arrowwood Viburnum	#7	As shown	
64	VIB LIT	Viburnum dentatum `KLMseventeen`	Little Joe™ Arrowwood Viburnum	#7	48" O.C.	
Grasses						
390	AND VIR	Andropogon virginicus	Broomsedge Bluestem	#1	21" O.C.	fully rooted
452	CAL KAR	Calamagrostis x acutiflora `Karl Foerster`	Karl Foerster Feather Reed Grass	#2	18" O.C.	Fully rooted
196	PAN NOR	Panicum virgatum `Northwind`	Northwind Switch Grass	#2	30" O.C.	fully rooted
348	PAN SHD	Panicum virgatum `Shenandoah`	Shenandoah Switch Grass	#2	24" O.C.	Fully rooted
60	PEN ALO	Pennisetum alopecuroides	Fountain Grass	#2	24" O.C.	Fully rooted
281	PEN BUN	Pennisetum alopecuroides `Little Bunny`	Little Bunny Fountain Grass	#1	15" O.C.	Fully rooted
184	PEN HAM	Pennisetum alopecuroides `Hameln`	Hameln Fountain Grass	#1	18" O.C.	Fully rooted
346	SCH SCO	Schizachyrium scoparium `The Blues`	The Blues Little Bluestem	#1	18" O.C.	Fully rooted
709	SCH ST2	Schizachyrium scoparium `Standing Ovation`	Standing Ovation Little Bluestem	#2	18" O.C.	Fully rooted
2966						
Perennials						
51	AMS HUB	Amsonia hubrichtii	Arkansas Bluestar	#1	24" O.C.	fully rooted
105	AST PUR	Aster novae-angliae `Purple Dome`	Purple Dome New England Aster	#1	18" O.C.	Fully rooted
182	BAP PUR	Baptisia x `Purple Smoke`	Purple Smoke Wild Indigo	#1	30" O.C.	fully rooted
199	ECH POW	Echinacea x `Pow Wow`	Pow Wow Coneflower	#1	18" O.C.	Fully rooted
60	EUP GAT	Eupatoriadelphus maculatus `Gateway`	Gateway Joe Pye Weed	#1	24" O.C.	fully rooted
315	EUP LIT	Eupatoriadelphus dubium `Little Joe`	Little Joe Pye Weed	#1	18" O.C.	fully rooted
649	RUD FU2	Rudbeckia hirta fulgida	Black-eyed Susan	#1	18" O.C.	fully rooted
1561						

PROJECT NAME
MERITUS GRAD HOUSING

PROJECT ADDRESS
1500 MT AETNA RD, HAGERSTOWN, MD 21742

DC Project No. 23-P-0088

Owner Project No.

OWNER / DEVELOPER
MERITUS/ RADNOR

PROJECT SUBMISSION

PERMIT SUBMISSION

REVISION#	ISSUED FOR	DATE
	DESIGN DEVELOPMENT	07/28/2023
	50% CD	10/16/2023
	PERMIT SUBMISSION	12/11/2023

Design Collective
ARCHITECTURE · PLANNING · INTERIORS
LANDSCAPE ARCHITECTURE · GRAPHICS
100 East First Street, 5th Floor
Boston, Massachusetts 02127
P-617 695 6655 www.designcollective.com

©DESIGN COLLECTIVE,INC. ALL RIGHTS RESERVED

CONSULTANT

KEY PLAN

SEAL

AFFIRMATION

SHEET TITLE
MITIGATION PLAN - MASTER PLANT SCHEDULE

SCALE

SHEET NUMBER
L007

12/11/2023 5:31:27 PM

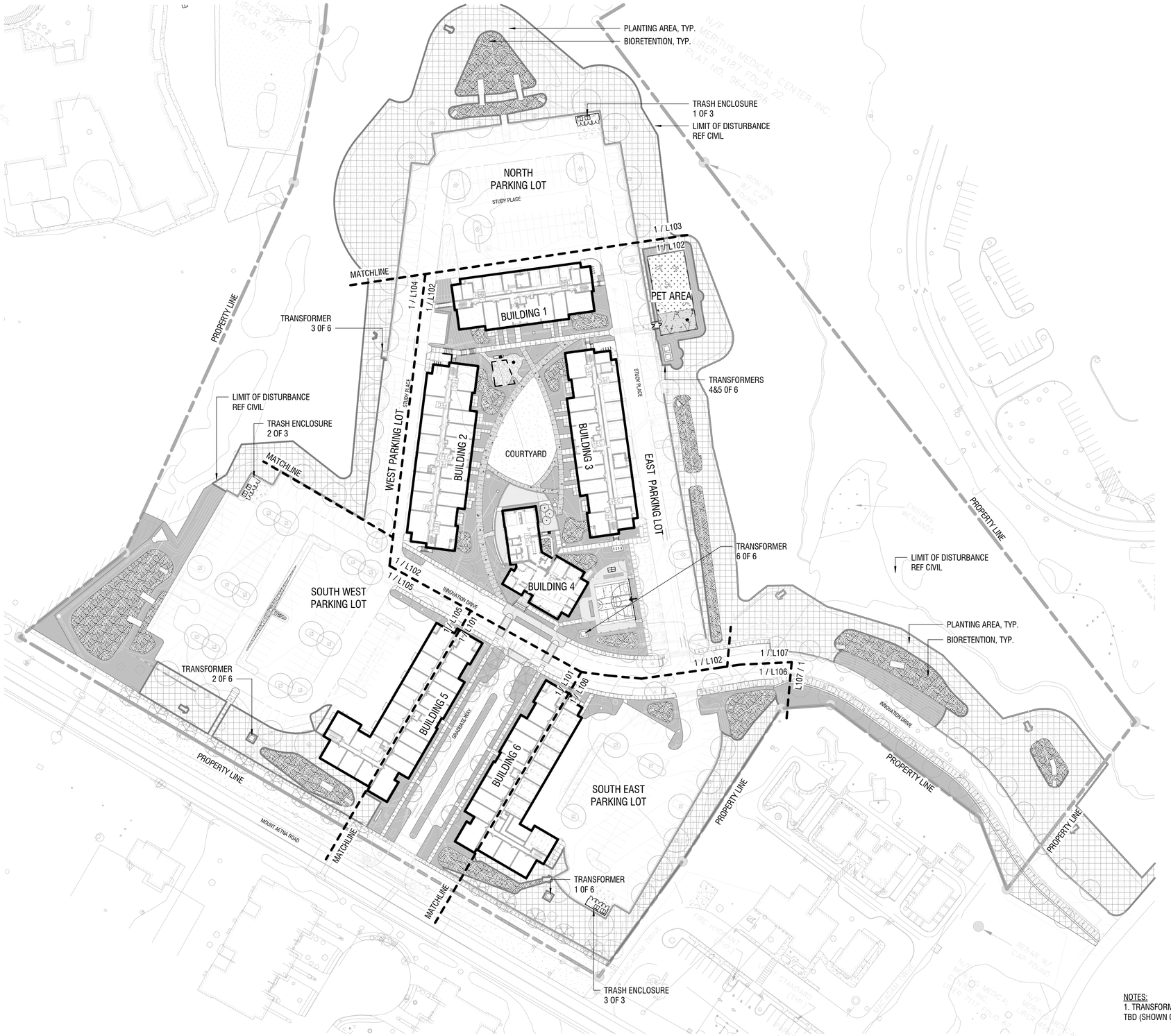

NOTES:
1. TRANSFORMER QUANTITIES AND LOCATION, TBD (SHOWN ONLY AS CONCEPT PLACE-HOLDERS.

1 / L100 LANDSCAPE SITE PLAN
1" = 60'-0"

N

PROJECT NAME
MERITUS GRAD HOUSING

PROJECT ADDRESS
1500 MT AETNA RD, HAGERSTOWN, MD 21742

DC Project No. 23-P-0088

Owner Project No.

OWNER / DEVELOPER
MERITUS/ RADNOR

PROJECT SUBMISSION
PERMIT SUBMISSION

REVISION#	ISSUED FOR	DATE
	SCHEMATIC DESIGN	06/02/2023
	DESIGN DEVELOPMENT	07/28/2023
	SITE PLAN	09/01/2023
	50% CD	10/16/2023
	PERMIT SUBMISSION	12/11/2023

Design Collective
ARCHITECTURE PLANNING INTERIORS
LANDSCAPE ARCHITECTURE GRAPHICS
100 East Pratt Street, 18th Floor
Baltimore, Maryland 21202
P 410 685 6655 | www.designcollective.com

©DESIGN COLLECTIVE, INC. ALL RIGHTS RESERVED

CONSULTANT

KEY PLAN

SEAL

AFFIRMATION

SHEET TITLE
LANDSCAPE SITE PLAN

SCALE
1" = 60'-0"

SHEET NUMBER
L100

SP-23-034

12/11/2023 5:32:53 PM

LEGEND - TREE PLANTING	
Plant Code	Botanical Name
Evergreen Trees	
IC	Ilex x `Conaf`
JV	Juniperus virginiana
MJ	Magnolia virginiana `Jim Wilson`
MT	Magnolia grandiflora `Little Gem`
PO	Picea omorika
Ornamental Trees	
AG	Amelanchier x grandiflora `Autumn Brilliance`
CF	Cornus florida `Appalachian Joy`
HH	Hamamelis virginiana `Harvest Moon`
Site Deciduous Trees	
BN2	Betula nigra
CC	Cercis canadensis
CF2	Cornus florida
QPA	Quercus palustris
TA	Tilia americana
Trees	
AO	Acer rubrum `October Glory`
BN	Betula nigra `Duraheat`
FG	Fagus grandifolia
NS	Nyssa sylvatica
PO	Platanus occidentalis
QP	Quercus phellos

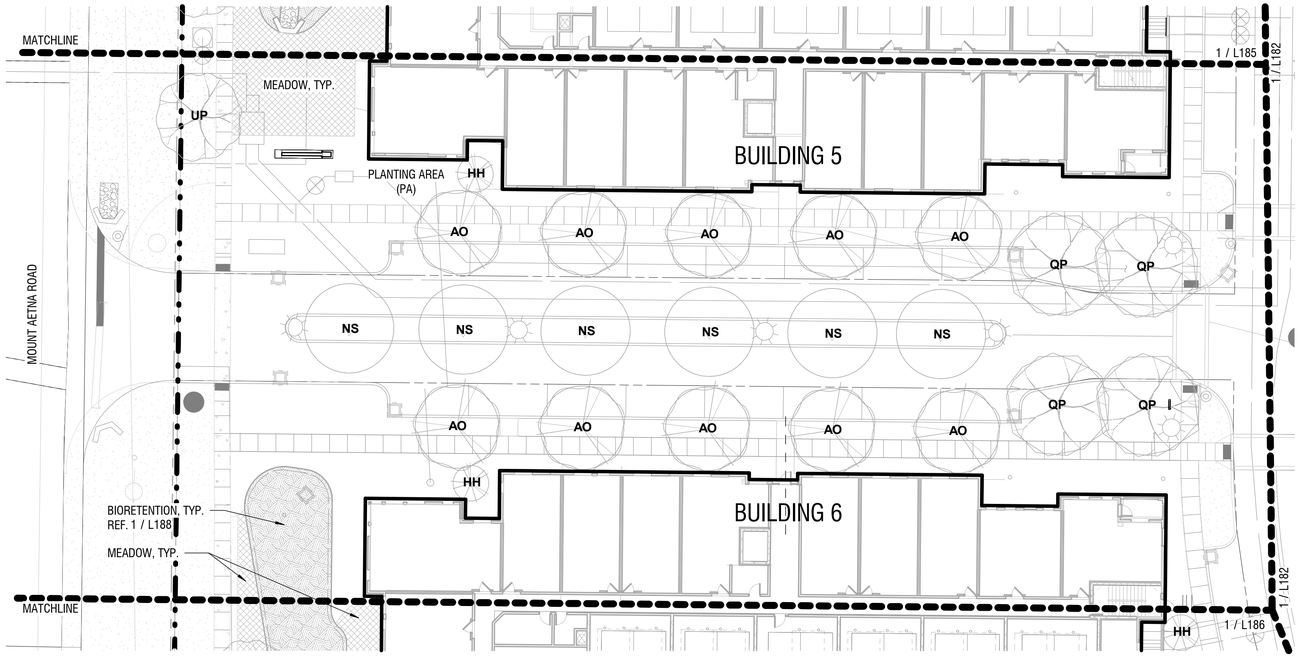

1 / L181 TREE PLAN - GRADUATE WAY
1" = 20'-0"

0' 10' 20' 40'

PROJECT NAME
MERITUS GRAD HOUSING

PROJECT ADDRESS
1500 MT AETNA RD, HAGERSTOWN, MD 21742

DC Project No. 23-P-0088

Owner Project No.

OWNER / DEVELOPER
MERITUS/ RADNOR

PROJECT SUBMISSION

PERMIT SUBMISSION

REVISION#	ISSUED FOR	DATE
	SITE PLAN	09/01/2023
	50% CD	10/16/2023
	PERMIT SUBMISSION	12/11/2023

Design Collective
ARCHITECTURE · PLANNING · INTERIORS
LANDSCAPE ARCHITECTURE · GRAPHICS
900 East Pratt Street, 16th Floor
Baltimore, Maryland 21202
P 410 685 6655 www.designcollective.com

© DESIGN COLLECTIVE, INC. ALL RIGHTS RESERVED

CONSULTANT

KEY PLAN

SEAL

AFFIRMATION

SHEET TITLE
TREE PLAN - GRADUATE WAY

SCALE
1" = 20'-0"

SHEET NUMBER
L181

12/11/2023 5:33:19 PM

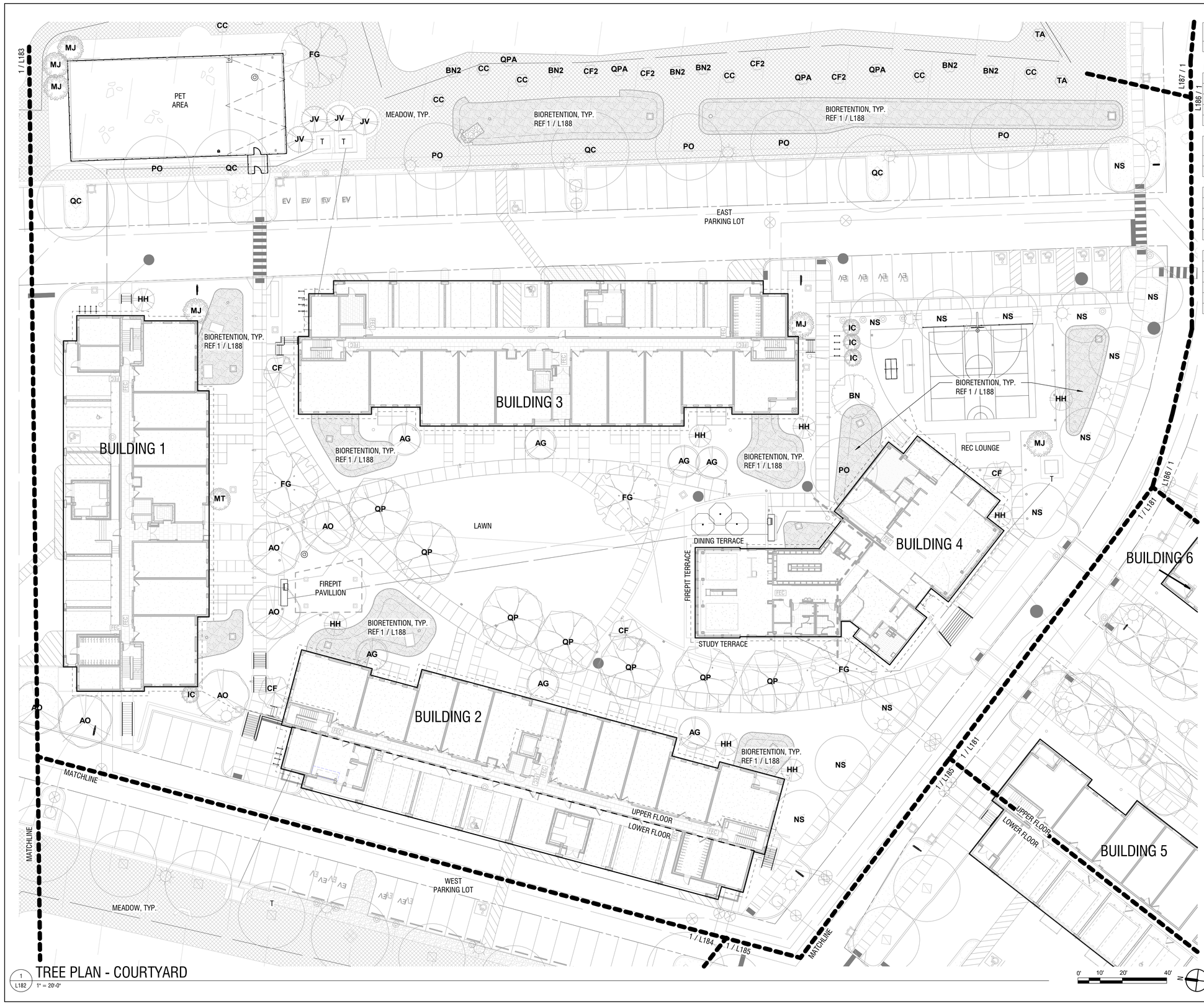

1 / L182 TREE PLAN - COURTYARD
1" = 20'-0"

LEGEND - TREE PLANTING	
Plant Code	Botanical Name
Evergreen Trees	
IC	Ilex x `Conaf`
JV	Juniperus virginiana
MJ	Magnolia virginiana `Jim Wilson`
MT	Magnolia grandiflora `Little Gem`
PO	Picea omorika
Ornamental Trees	
AG	Amelanchier x grandiflora `Autumn Brilliance`
CF	Cornus florida `Appalachian Joy`
HH	Hamamelis virginiana `Harvest Moon`
Site Deciduous Trees	
BN2	Betula nigra
CC	Cercis canadensis
CF2	Cornus florida
QPA	Quercus palustris
TA	Tilia americana
Trees	
AO	Acer rubrum `October Glory`
BN	Betula nigra `Duraheat`
FG	Fagus grandifolia
NS	Nyssa sylvatica
PO	Platanus occidentalis
QP	Quercus phellos

PROJECT NAME
MERITUS GRAD HOUSING

PROJECT ADDRESS
1500 MT AETNA RD, HAGERSTOWN, MD 21742

DC Project No. 23-P-0088

Owner Project No.

OWNER / DEVELOPER
MERITUS/ RADNOR

PROJECT SUBMISSION
PERMIT SUBMISSION

REVISION #	ISSUED FOR	DATE
	SITE PLAN	09/01/2023
	50% CD	10/16/2023
	PERMIT SUBMISSION	12/11/2023

Design Collective
ARCHITECTURE PLANNING INTERIORS
LANDSCAPE ARCHITECTURE GRAPHICS
100 East Pratt Street, 18th Floor
Baltimore, Maryland 21202
P 410 685 6655 | www.designcollective.com

©DESIGN COLLECTIVE, INC. ALL RIGHTS RESERVED

CONSULTANT

KEY PLAN

SEAL

AFFIRMATION

SHEET TITLE
TREE PLAN - COURTYARD

SCALE
1" = 20'-0"

SHEET NUMBER
L182

SP-23-034

12/11/2023 5:34:00 PM

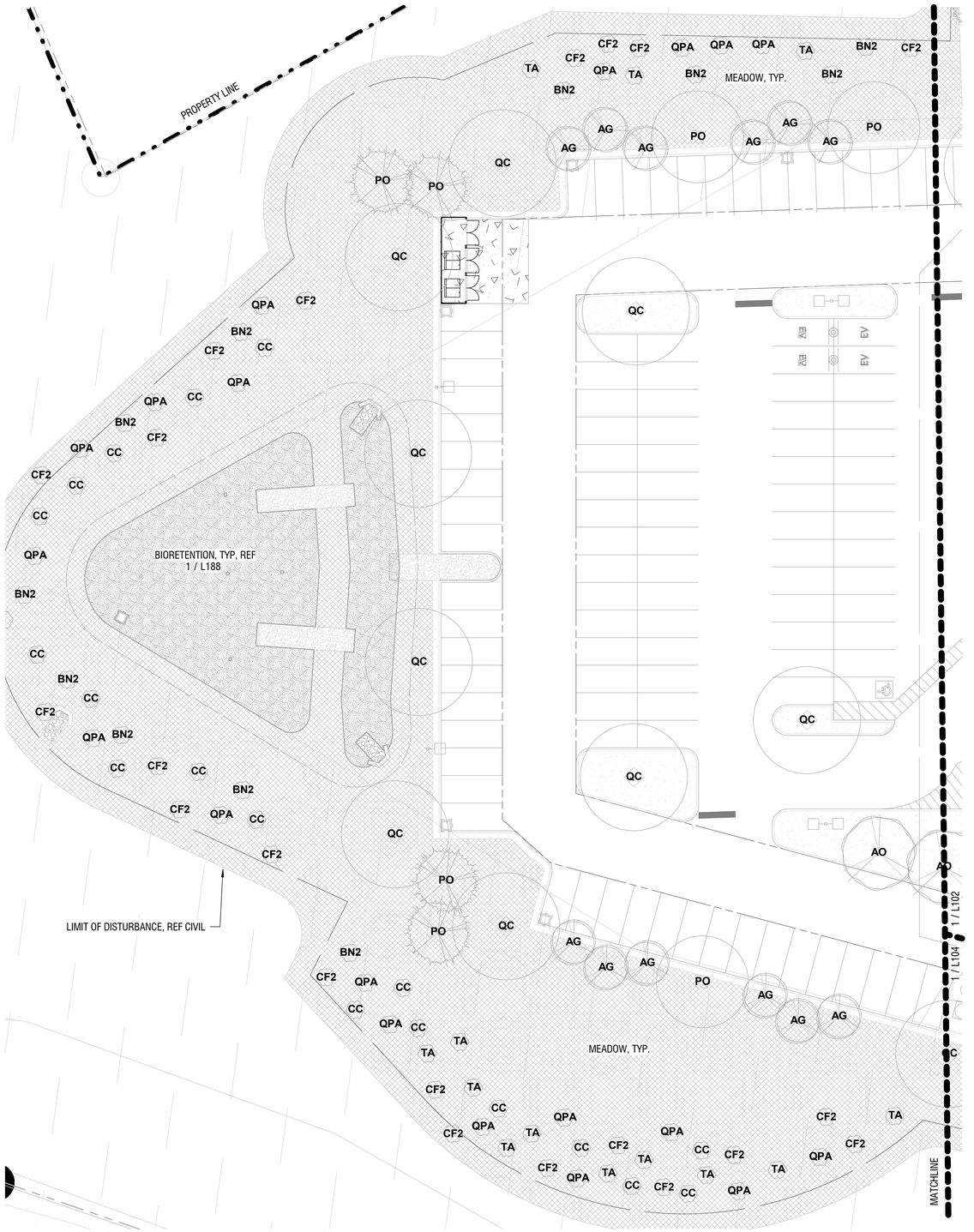

1 / L183 NORTH PARKING LOT
1" = 20'-0"

0' 10' 20' 40'

LEGEND - TREE PLANTING	
Plant Code	Botanical Name
Evergreen Trees	
IC	Ilex x `Conaf`
JV	Juniperus virginiana
MJ	Magnolia virginiana `Jim Wilson`
MT	Magnolia grandiflora `Little Gem`
PO	Picea omorika
Ornamental Trees	
AG	Amelanchier x grandiflora `Autumn Brilliance`
CF	Cornus florida `Appalachian Joy`
HH	Hamamelis virginiana `Harvest Moon`
Site Deciduous Trees	
BN2	Betula nigra
CC	Cercis canadensis
CF2	Cornus florida
QPA	Quercus palustris
TA	Tilia americana
Trees	
AO	Acer rubrum `October Glory`
BN	Betula nigra `Duraheat`
FG	Fagus grandifolia
NS	Nyssa sylvatica
PO	Platanus occidentalis
QP	Quercus phellos

PROJECT NAME
MERITUS GRAD HOUSING

PROJECT ADDRESS
1500 MT AETNA RD, HAGERSTOWN, MD 21742

DC Project No. 23-P-0088

Owner Project No.

OWNER / DEVELOPER
MERITUS/ RADNOR

PROJECT SUBMISSION
PERMIT SUBMISSION

REVISION#	ISSUED FOR	DATE
	SITE PLAN	09/01/2023
	50% CD	10/16/2023
	PERMIT SUBMISSION	12/11/2023

Design Collective
ARCHITECTURE PLANNING INTERIORS
LANDSCAPE ARCHITECTURE GRAPHICS
100 East Pratt Street, 18th Floor
Baltimore, Maryland 21202
P 410 685 6655 | www.designcollective.com

©DESIGN COLLECTIVE, INC. ALL RIGHTS RESERVED

CONSULTANT

KEY PLAN

SEAL

AFFIRMATION

SHEET TITLE
TREE PLAN - N PARKING LOT

SCALE
1" = 20'-0"

SHEET NUMBER
L183

12/11/2023 5:34:02 PM

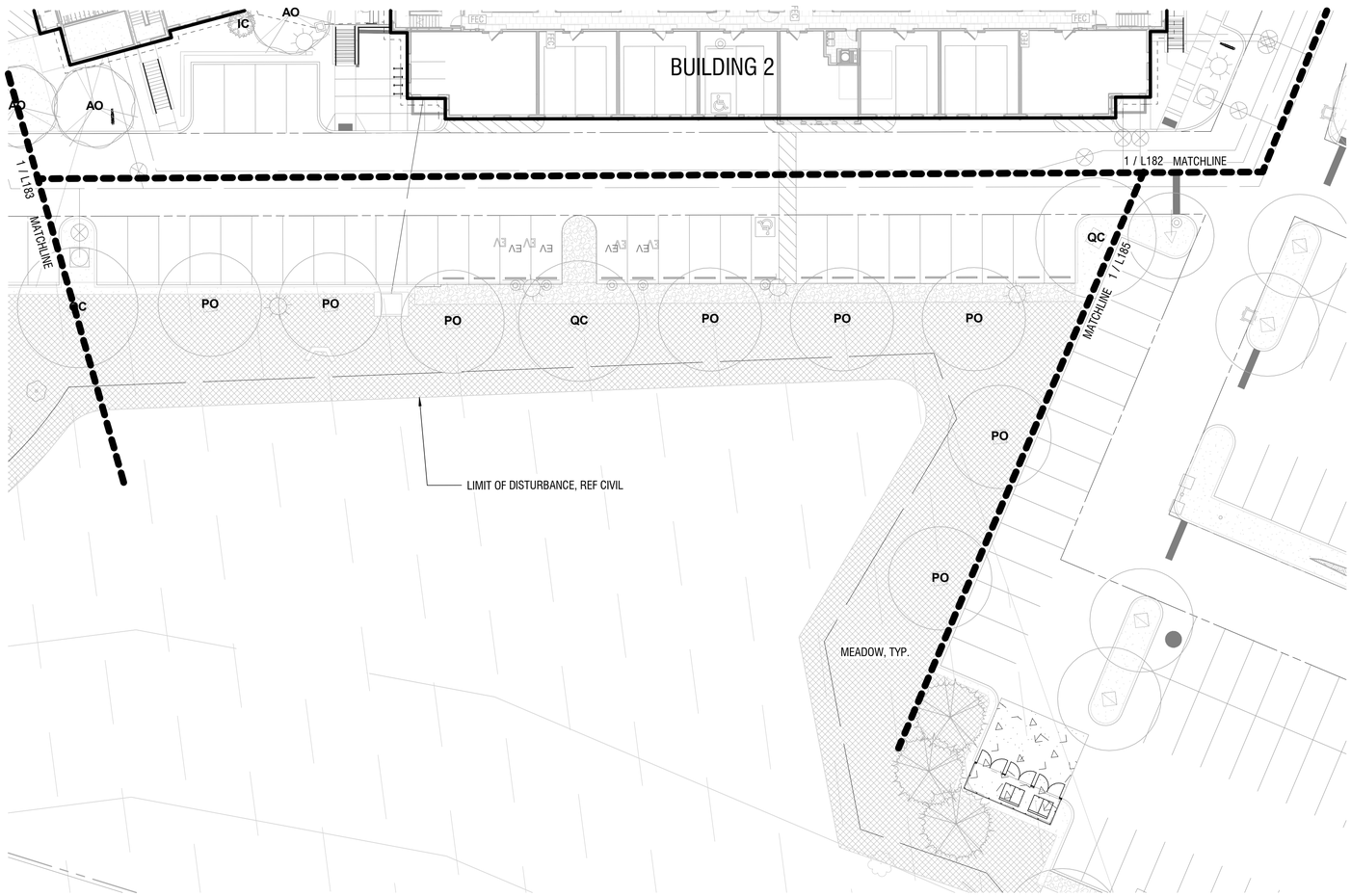

1 / L184 WEST PARKING LOT
1" = 20'-0"

0' 10' 20' 40'

LEGEND - TREE PLANTING	
Plant Code	Botanical Name
Evergreen Trees	
IC	Ilex x `Conaf`
JV	Juniperus virginiana
MJ	Magnolia virginiana `Jim Wilson`
MT	Magnolia grandiflora `Little Gem`
PO	Picea omorika
Ornamental Trees	
AG	Amelanchier x grandiflora `Autumn Brilliance`
CF	Cornus florida `Appalachian Joy`
HH	Hamamelis virginiana `Harvest Moon`
Site Deciduous Trees	
BN2	Betula nigra
CC	Cercis canadensis
CF2	Cornus florida
QPA	Quercus palustris
TA	Tilia americana
Trees	
AO	Acer rubrum `October Glory`
BN	Betula nigra `Duraheat`
FG	Fagus grandifolia
NS	Nyssa sylvatica
PO	Platanus occidentalis
QP	Quercus phellos

PROJECT NAME
MERITUS GRAD HOUSING

PROJECT ADDRESS
1500 MT AETNA RD, HAGERSTOWN, MD 21742

DC Project No. 23-P-0088

Owner Project No.

OWNER / DEVELOPER
MERITUS/ RADNOR

PROJECT SUBMISSION
PERMIT SUBMISSION

REVISION#	ISSUED FOR	DATE
	SITE PLAN	09/01/2023
	50% CD	10/16/2023
	PERMIT SUBMISSION	12/11/2023

Design Collective
ARCHITECTURE PLANNING INTERIORS
LANDSCAPE ARCHITECTURE GRAPHICS
100 East Pratt Street, 18th Floor
Baltimore, Maryland 21202
P 410 685 6655 | www.designcollective.com

©DESIGN COLLECTIVE, INC. ALL RIGHTS RESERVED

CONSULTANT

KEY PLAN

SEAL

AFFIRMATION

SHEET TITLE
TREE PLAN - W PARKING LOT

SCALE
1" = 20'-0"

SHEET NUMBER
L184

SP-23-034

12/11/2023 5:34:06 PM

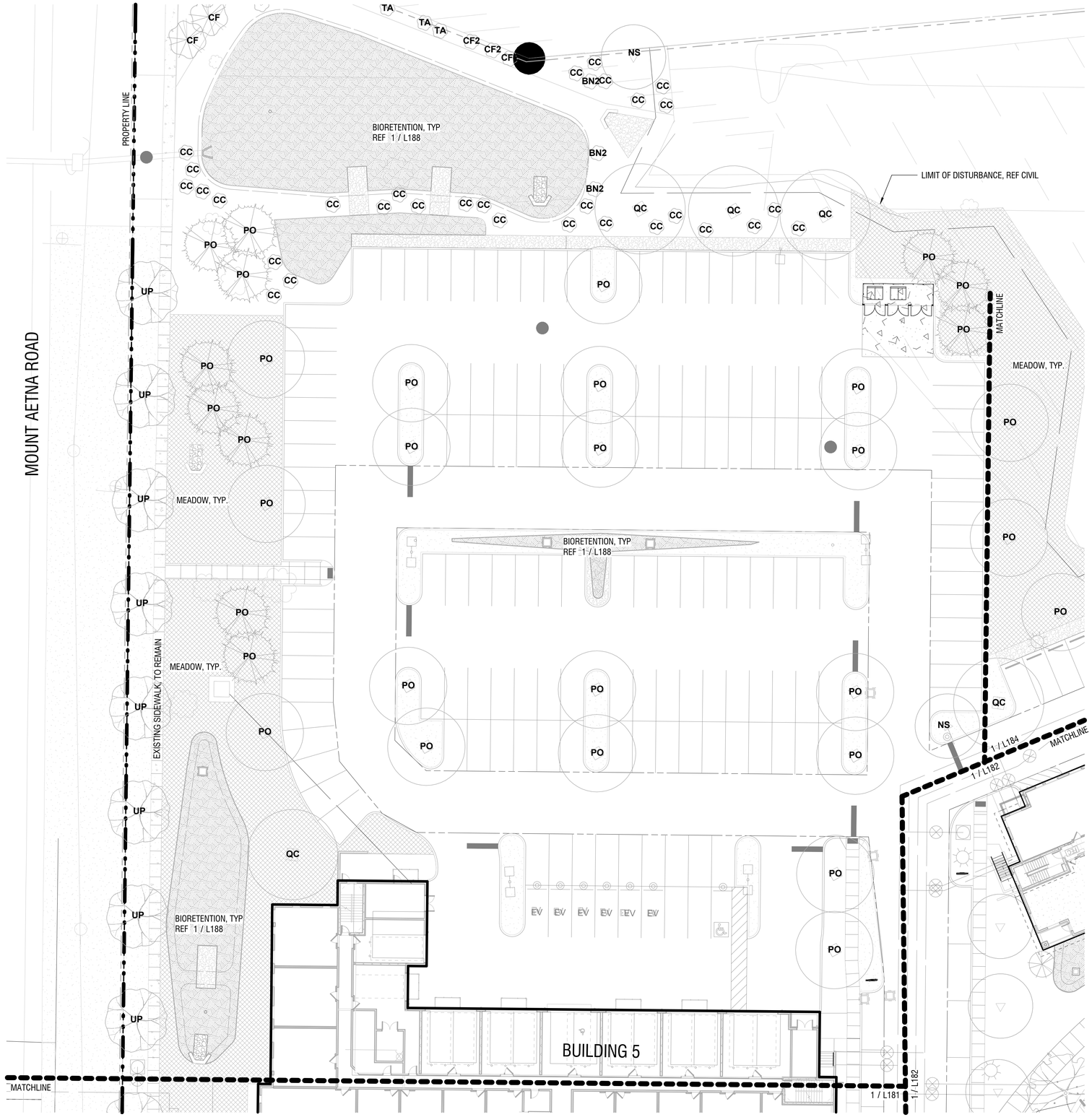

1 / L185 SOUTH-WEST PARKING LOT
1" = 20'-0"

LEGEND - TREE PLANTING	
Plant Code	Botanical Name
Evergreen Trees	
IC	Ilex x `Conaf`
JV	Juniperus virginiana
MJ	Magnolia virginiana `Jim Wilson`
MT	Magnolia grandiflora `Little Gem`
PO	Picea omorika
Ornamental Trees	
AG	Amelanchier x grandiflora `Autumn Brilliance`
CF	Cornus florida `Appalachian Joy`
HH	Hamamelis virginiana `Harvest Moon`
Site Deciduous Trees	
BN2	Betula nigra
CC	Cercis canadensis
CF2	Cornus florida
QPA	Quercus palustris
TA	Tilia americana
Trees	
AO	Acer rubrum `October Glory`
BN	Betula nigra `Duraheat`
FG	Fagus grandifolia
NS	Nyssa sylvatica
PO	Platanus occidentalis
QP	Quercus phellos

PROJECT NAME
MERITUS GRAD HOUSING

PROJECT ADDRESS
1500 MT AETNA RD, HAGERSTOWN, MD 21742

DC Project No. 23-P-0088

Owner Project No.

OWNER / DEVELOPER
MERITUS/ RADNOR

PROJECT SUBMISSION
PERMIT SUBMISSION

REVISION#	ISSUED FOR	DATE
	SITE PLAN	09/01/2023
	50% CD	10/16/2023
	PERMIT SUBMISSION	12/11/2023

Design Collective
ARCHITECTURE PLANNING INTERIORS
LANDSCAPE ARCHITECTURE GRAPHICS
100 East Pratt Street, 18th Floor
Baltimore, Maryland 21202
P 410 685 6655 | www.designcollective.com

©DESIGN COLLECTIVE, INC. ALL RIGHTS RESERVED

CONSULTANT

KEY PLAN

SEAL

AFFIRMATION

SHEET TITLE
TREE PLAN - SW PARKING LOT

SCALE
1" = 20'-0"

SHEET NUMBER
L185

SP-23-034

12/11/2023 5:34:13 PM

LEGEND - TREE PLANTING	
Plant Code	Botanical Name
Evergreen Trees	
IC	Ilex x `Conaf`
JV	Juniperus virginiana
MJ	Magnolia virginiana `Jim Wilson`
MT	Magnolia grandiflora `Little Gem`
PO	Picea omorika
Ornamental Trees	
AG	Amelanchier x grandiflora `Autumn Brilliance`
CF	Cornus florida `Appalachian Joy`
HH	Hamamelis virginiana `Harvest Moon`
Site Deciduous Trees	
BN2	Betula nigra
CC	Cercis canadensis
CF2	Cornus florida
QPA	Quercus palustris
TA	Tilia americana
Trees	
AO	Acer rubrum `October Glory`
BN	Betula nigra `Duraheat`
FG	Fagus grandifolia
NS	Nyssa sylvatica
PO	Platanus occidentalis
QP	Quercus phellos

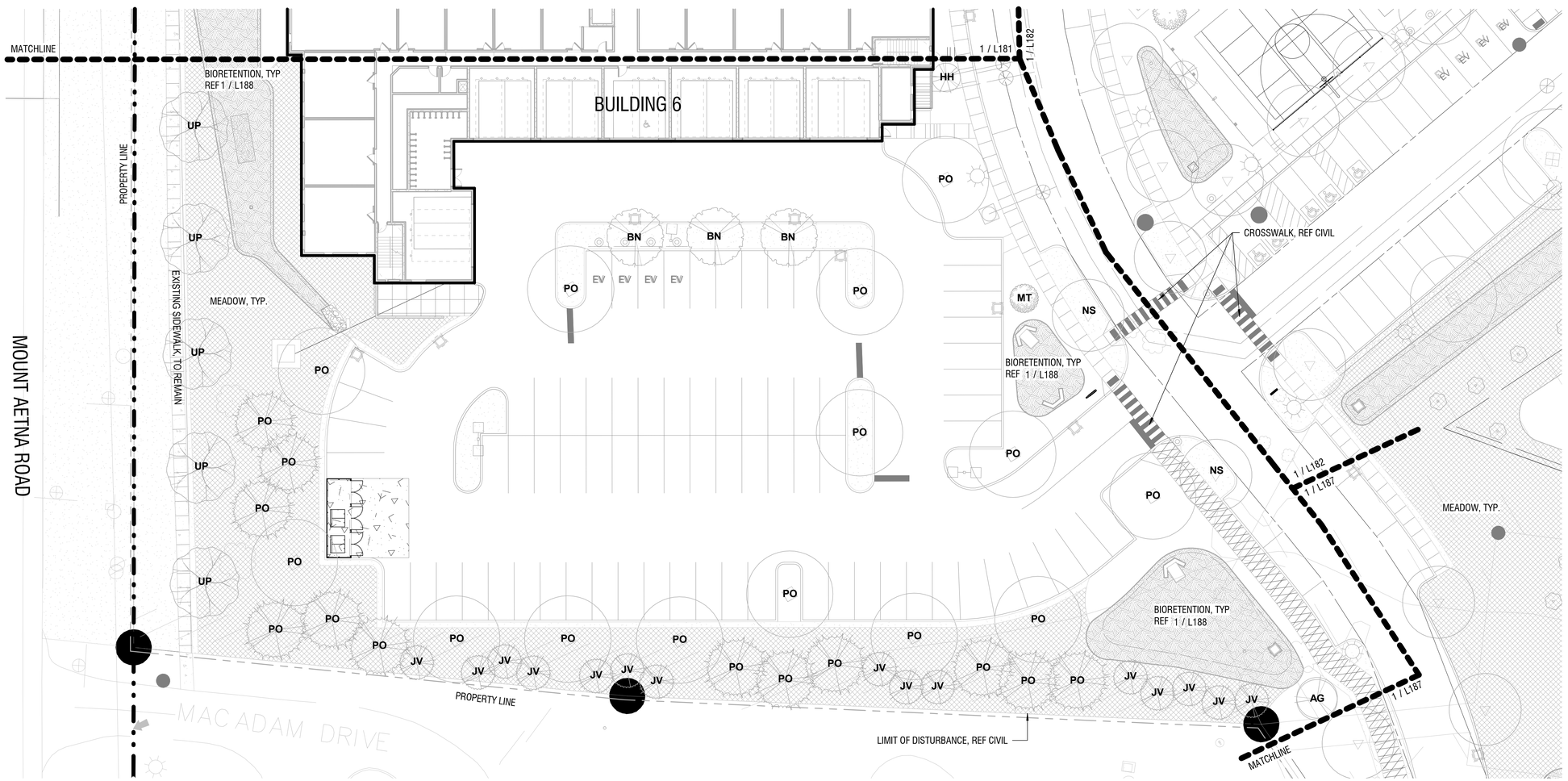

1 / L186 SOUTH-EAST PARKING LOT
1" = 20'-0"

0' 10' 20' 40'

PROJECT NAME
MERITUS GRAD HOUSING

PROJECT ADDRESS
1500 MT AETNA RD, HAGERSTOWN, MD 21742

DC Project No. 23-P-0088

Owner Project No.

OWNER / DEVELOPER
MERITUS/ RADNOR

PROJECT SUBMISSION
PERMIT SUBMISSION

REVISION#	ISSUED FOR	DATE
	SITE PLAN	09/01/2023
	50% CD	10/16/2023
	PERMIT SUBMISSION	12/11/2023

Design Collective
ARCHITECTURE PLANNING INTERIORS
LANDSCAPE ARCHITECTURE GRAPHICS
100 East Pratt Street, 18th Floor
Baltimore, Maryland 21202
P 410 685 6655 | www.designcollective.com

©DESIGN COLLECTIVE, INC. ALL RIGHTS RESERVED

CONSULTANT

KEY PLAN

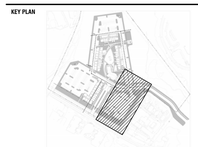

SEAL

AFFIRMATION

SHEET TITLE
TREE PLAN - SE PARKING LOT

SCALE
1" = 20'-0"

SHEET NUMBER
L186

SP-23-034

12/11/2023 5:34:21 PM

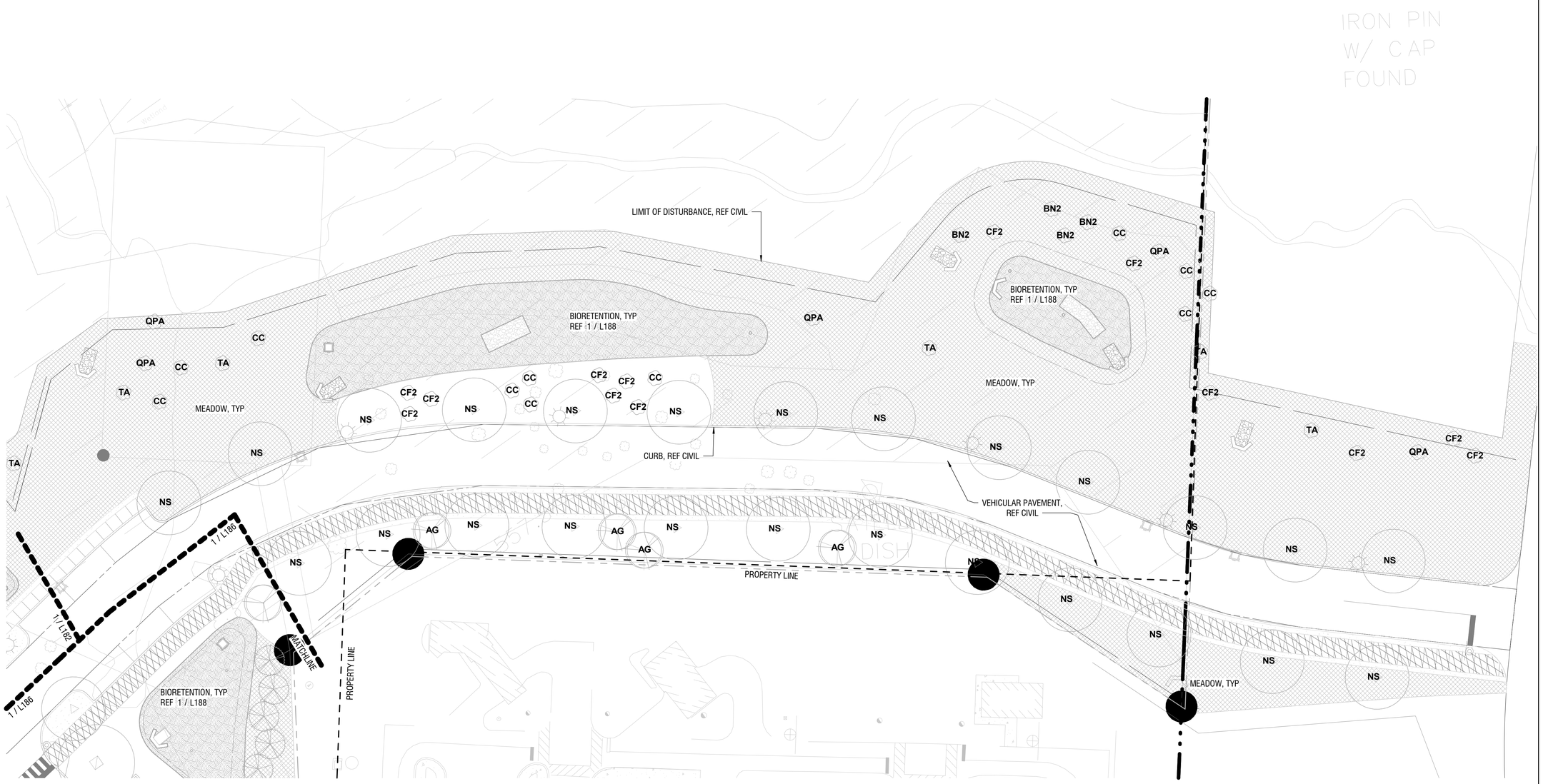

1 / L187 EAST ENTRY DRIVE
1" = 20'-0"

0' 10' 20' 40'

PROJECT NAME
MERITUS GRAD HOUSING

PROJECT ADDRESS
1500 MT AETNA RD, HAGERSTOWN, MD 21742

DC Project No. 23-P-0088

Owner Project No.

OWNER / DEVELOPER
MERITUS/ RADNOR

PROJECT SUBMISSION
PERMIT SUBMISSION

REVISION#	ISSUED FOR	DATE
	SITE PLAN	09/01/2023
	50% CD	10/16/2023
	PERMIT SUBMISSION	12/11/2023

Design Collective
ARCHITECTURE PLANNING INTERIORS
LANDSCAPE ARCHITECTURE GRAPHICS
100 East Pratt Street, 18th Floor
Baltimore, Maryland 21202
P 410 685 6655 | www.designcollective.com

©DESIGN COLLECTIVE, INC. ALL RIGHTS RESERVED

CONSULTANT

KEY PLAN

SEAL

AFFIRMATION

SHEET TITLE
TREE PLAN - E ENTRY DRIVE

SCALE
1" = 20'-0"

SHEET NUMBER
L187

SP-23-034

12/11/2023 5:34:27 PM

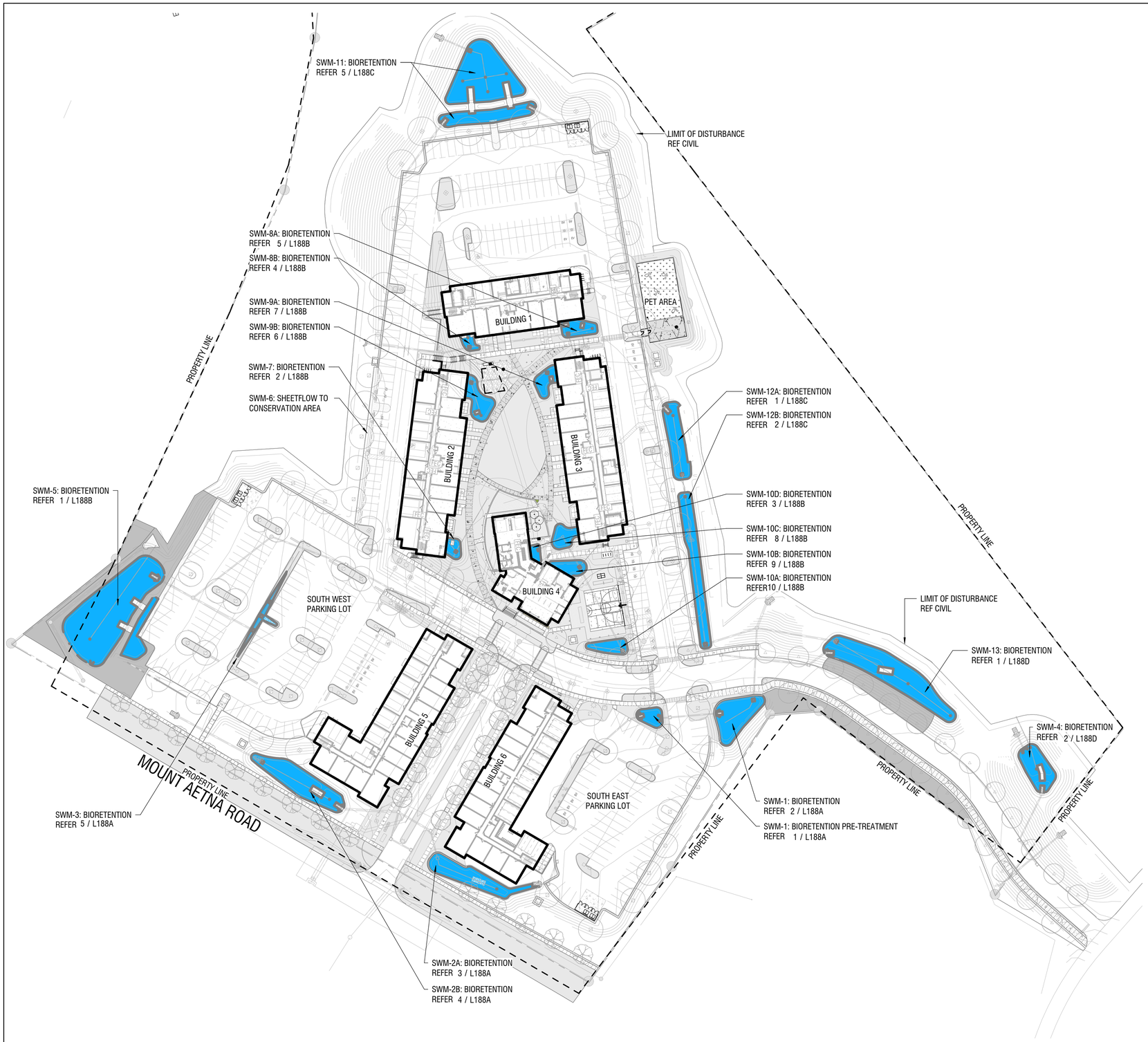

1 L188 SWM KEY PLAN
1" = 60'-0"

PROJECT NAME
MERITUS GRAD HOUSING

PROJECT ADDRESS
1500 MT AETNA RD, HAGERSTOWN, MD 21742

DC Project No. 23-P-0088

Owner Project No.

OWNER / DEVELOPER
MERITUS/ RADNOR

PROJECT SUBMISSION
PERMIT SUBMISSION

REVISION#	ISSUED FOR	DATE
	SITE PLAN	09/01/2023
	50% CD	10/16/2023
	PERMIT SUBMISSION	12/11/2023

Design Collective
ARCHITECTURE PLANNING INTERIORS
LANDSCAPE ARCHITECTURE GRAPHICS
100 East Pratt Street, 18th Floor
Baltimore, Maryland 21202
P 410 685 6655 | www.designcollective.com

©DESIGN COLLECTIVE, INC. ALL RIGHTS RESERVED

CONSULTANT

KEY PLAN

SEAL

AFFIRMATION

SHEET TITLE
SWM LANDSCAPE KEY PLAN

SCALE
1" = 60'-0"

SHEET NUMBER
L188

SP-23-034

12/11/2023 5:34:33 PM

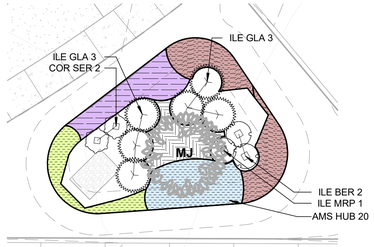

1 L188A SWM-1 - PRETREATMENT BIORETENTION BASIN
1" = 10'-0"

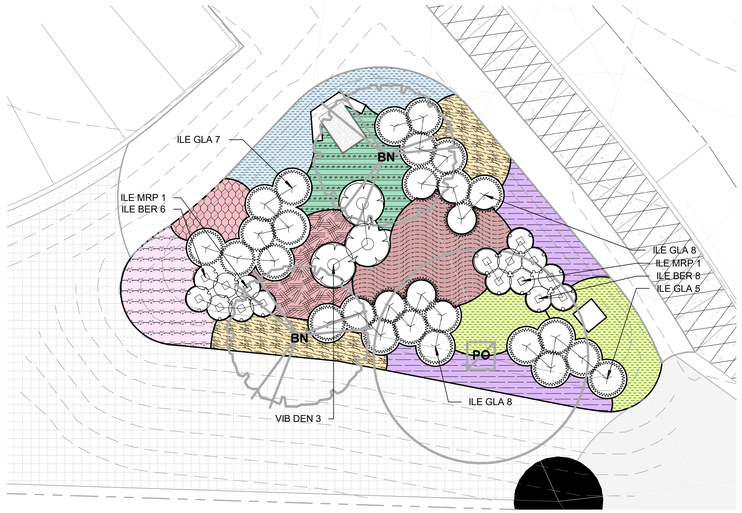

2 L188A SWM - 1 - BIORETENTION
1" = 10'-0"

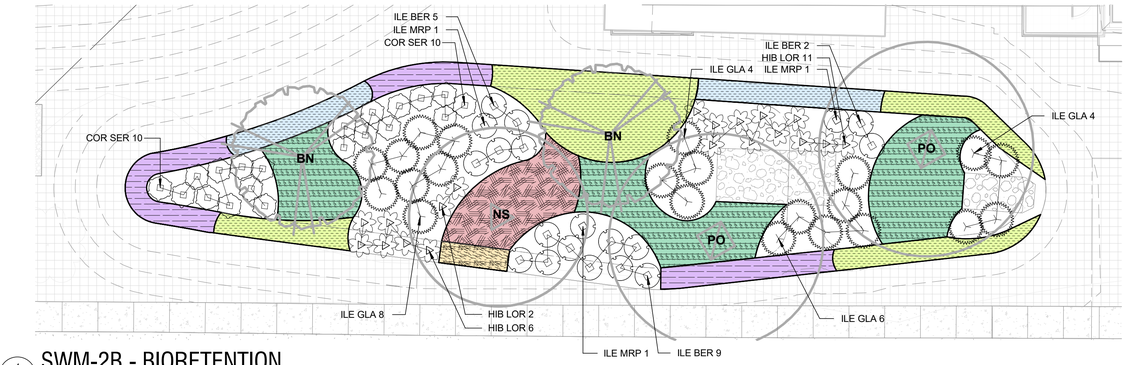

4 L188A SWM-2B - BIORETENTION
1" = 10'-0"

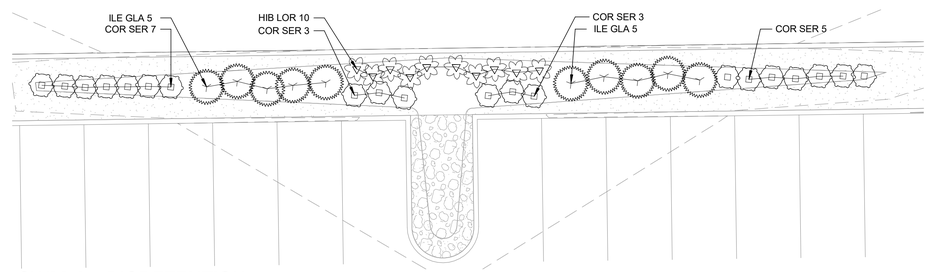

5 L188A SWM-3 - BIORETENTION
1" = 10'-0"

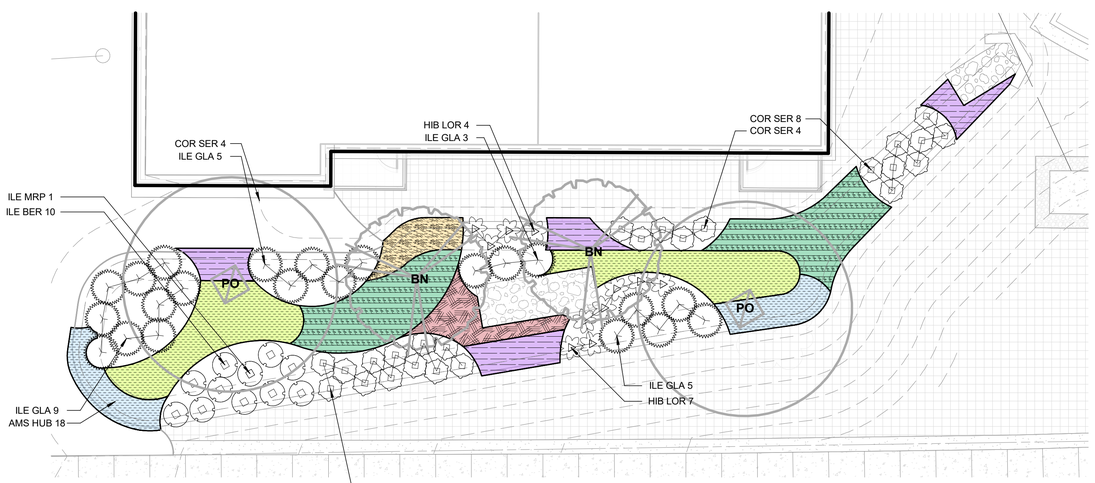

3 L188A SWM-2A - BIORETENTION
1" = 10'-0"

SWM LEGEND - PLANTING		
Plant Code	Botanical Name	Common Name
Evergreen Trees		
MJ	Magnolia virginiana `Jim Wilson`	Moonglow® Sweetbay Magnolia
Trees		
BN	Betula nigra `Duraheat`	Duraheat River Birch
NS	Nyssa sylvatica	Black Gum
PO	Platanus occidentalis	American Sycamore
Shrub		
COR KLS	Cornus sericea `Kelseyi`	Kelsey`s Dwarf Red Twig Dogwood
COR SER	Cornus sericea `Farrow`	Arctic Fire® Red Twig Dogwood
FOT AIR	Fothergilla gardenii `Mt. Airy`	Mt. Airy Dwarf Witchalder
HIB LOR	Hibiscus moscheutos `Lord Baltimore`	Lord Baltimore Rose Mallow
ILE BER	Ilex verticillata `Berry Poppins`	Winterberry
ILE GLA	Ilex glabra	Inkberry Holly
ILE MRP	Ilex verticillata `Mr. Poppins`	Winterberry
ILE SHA	Ilex glabra `Shamrock`	Shamrock Inkberry Holly
KAL ELF	Kalmia latifolia `Elf`	Elf Dwarf Mountain Laurel
PRU OTT	Prunus laurocerasus `Otto Luyken`	Otto Luyken English Laurel
SPI SPI	Spiraea japonica `Little Princess`	Little Princess Japanese Spirea
VIB DEN	Viburnum dentatum `Arrowwood`	Arrowwood Viburnum
VIB LIT	Viburnum dentatum `KLMseventeen`	Little Joe™ Arrowwood Viburnum

Ferns		
DRY BRI	Dryopteris erythrosora `Brilliance`	Brilliance Autumn Fern
Grasses		
AND VIR	Andropogon virginicus	Broomsedge Bluestem
CAR PYL	Carex pensylvanica	Pennsylvania Sedge
PAN NOR	Panicum virgatum `Northwind`	Northwind Switch Grass
PAN SHD	Panicum virgatum `Shenandoah`	Shenandoah Switch Grass
Perennials		
AMS HUB	Amsonia hubrichtii	Arkansas Bluestar
BAP PUR	Baptisia x `Purple Smoke`	Purple Smoke Wild Indigo
ECH POW	Echinacea x `Pow Wow`	Pow Wow Coneflower
EUP GAT	Eupatoriadelphus maculatus `Gateway`	Gateway Joe Pye Weed
EUP LIT	Eupatoriadelphus dubium `Little Joe`	Little Joe Pye Weed
RUD FU2	Rudbeckia hirta fulgida	Black-eyed Susan

PROJECT NAME
MERITUS GRAD HOUSING

PROJECT ADDRESS
1500 MT AETNA RD, HAGERSTOWN, MD 21742

DC Project No. 23-P-0088

Owner Project No.

OWNER / DEVELOPER
MERITUS/ RADNOR

PROJECT SUBMISSION
PERMIT SUBMISSION

REVISION#	ISSUED FOR	DATE
	SITE PLAN	09/01/2023
	50% CD	10/16/2023
	PERMIT SUBMISSION	12/11/2023

Design Collective
ARCHITECTURE | PLANNING | INTERIORS
LANDSCAPE ARCHITECTURE | GRAPHICS
903 East Pratt Street, 5th Floor
Baltimore, Maryland 21202
P 410 685 6655 www.designcollective.com

©DESIGN COLLECTIVE,INC. ALL RIGHTS RESERVED

CONSULTANT

KEY PLAN

SEAL

AFFIRMATION

SHEET TITLE
PLANTING PLAN - SWM 1, 2, 3

SCALE
1" = 10'-0"

SHEET NUMBER
L188A

12/11/2023 5:34:43 PM

1 L188B LA_SWM-5
1" = 10'-0"

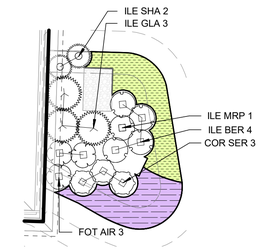

2 L188B LA_SWM-7
1" = 10'-0"

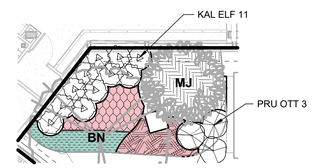

3 L188B LA_SWM-10D
1" = 10'-0"

SWM LEGEND - PLANTING		
Plant Code	Botanical Name	Common Name
Evergreen Trees		
MJ	Magnolia virginiana `Jim Wilson`	Moonglow® Sweetbay Magnolia
Trees		
BN	Betula nigra `Duraheat`	Duraheat River Birch
NS	Nyssa sylvatica	Black Gum
PO	Platanus occidentalis	American Sycamore
Shrub		
COR KLS	Cornus sericea `Kelseyi`	Kelsey`s Dwarf Red Twig Dogwood
COR SER	Cornus sericea `Farrow`	Arctic Fire® Red Twig Dogwood
FOT AIR	Fothergilla gardenii `Mt. Airy`	Mt. Airy Dwarf Witchalder
HIB LOR	Hibiscus moscheutos `Lord Baltimore`	Lord Baltimore Rose Mallow
ILE BER	Ilex verticillata `Berry Poppins`	Winterberry
ILE GLA	Ilex glabra	Inkberry Holly
ILE MRP	Ilex verticillata `Mr. Poppins`	Winterberry
ILE SHA	Ilex glabra `Shamrock`	Shamrock Inkberry Holly
KAL ELF	Kalmia latifolia `Elf`	Elf Dwarf Mountain Laurel
PRU OTT	Prunus laurocerasus `Otto Luyken`	Otto Luyken English Laurel
SPI SPI	Spiraea japonica `Little Princess`	Little Princess Japanese Spirea
VIB DEN	Viburnum dentatum `Arrowwood`	Arrowwood Viburnum
VIB LIT	Viburnum dentatum `KLMseventeen`	Little Joe™ Arrowwood Viburnum
Ferns		
DRY BRI	Dryopteris erythrosora `Brilliance`	Brilliance Autumn Fern
Grasses		
AND VIR	Andropogon virginicus	Broomsedge Bluestem
CAR PYL	Carex pensylvanica	Pennsylvania Sedge
PAN NOR	Panicum virgatum `Northwind`	Northwind Switch Grass
PAN SHD	Panicum virgatum `Shenandoah`	Shenandoah Switch Grass
Perennials		
AMS HUB	Amsonia hubrichtii	Arkansas Bluestar
BAP PUR	Baptisia x `Purple Smoke`	Purple Smoke Wild Indigo
ECH POW	Echinacea x `Pow Wow`	Pow Wow Coneflower
EUP GAT	Eupatoriadelphus maculatus `Gateway`	Gateway Joe Pye Weed
EUP LIT	Eupatoriadelphus dubium `Little Joe`	Little Joe Pye Weed
RUD FU2	Rudbeckia hirta fulgida	Black-eyed Susan

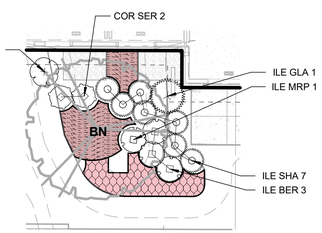

4 L188B LA_SWM-8B
1" = 10'-0"

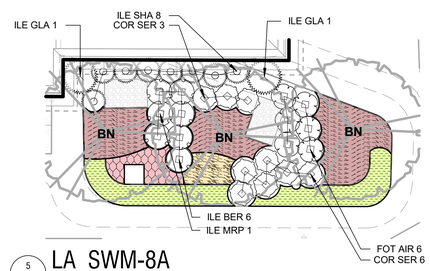

5 L188B LA_SWM-8A
1" = 10'-0"

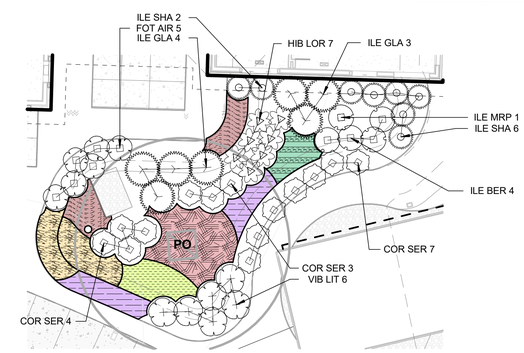

6 L188B LA_SWM-9B
1" = 10'-0"

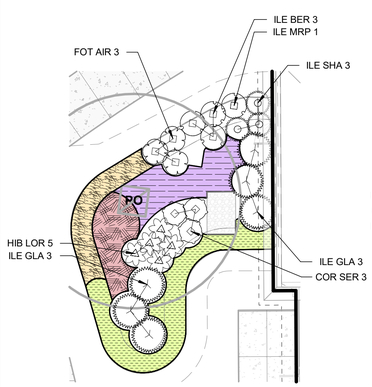

7 L188B LA_SWM-9A
1" = 10'-0"

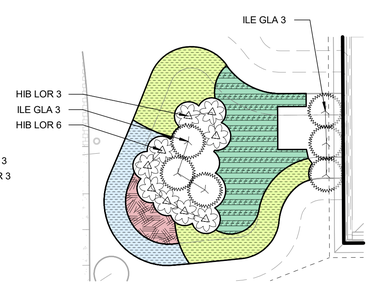

8 L188B LA_SWM-10C
1" = 10'-0"

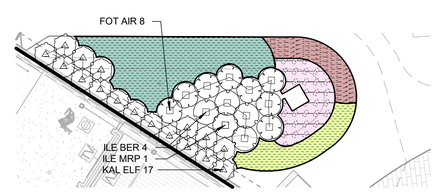

9 L188B LA_SWM-10B
1" = 10'-0"

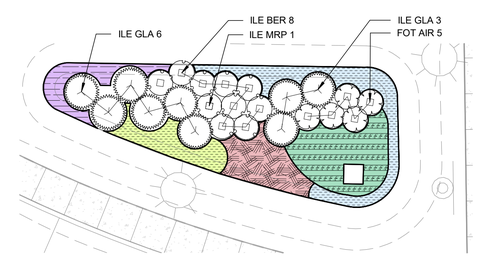

10 L188B LA_SWM-10A
1" = 10'-0"

PROJECT NAME
MERITUS GRAD HOUSING

PROJECT ADDRESS
1500 MT AETNA RD, HAGERSTOWN, MD 21742

DC Project No. 23-P-0088

Owner Project No.

OWNER / DEVELOPER
MERITUS/ RADNOR

PROJECT SUBMISSION
PERMIT SUBMISSION

REVISION#	ISSUED FOR	DATE
	SITE PLAN	09/01/2023
	50% CD	10/16/2023
	PERMIT SUBMISSION	12/11/2023

Design Collective
ARCHITECTURE • PLANNING • INTERIORS
LANDSCAPE ARCHITECTURE • GRAPHICS
1903 East First Street, 5th Floor
Boise, Idaho 83712
P 470 685 6655 www.designcollective.com

©DESIGN COLLECTIVE,INC. ALL RIGHTS RESERVED

CONSULTANT

KEY PLAN

SEAL

AFFIRMATION

SHEET TITLE
PLANTING PLAN - SWM 5, 7, 8, 9, 10

SCALE
1" = 10'-0"

SHEET NUMBER
L188B

SP-23-034

12/11/2023 5:34:49 PM

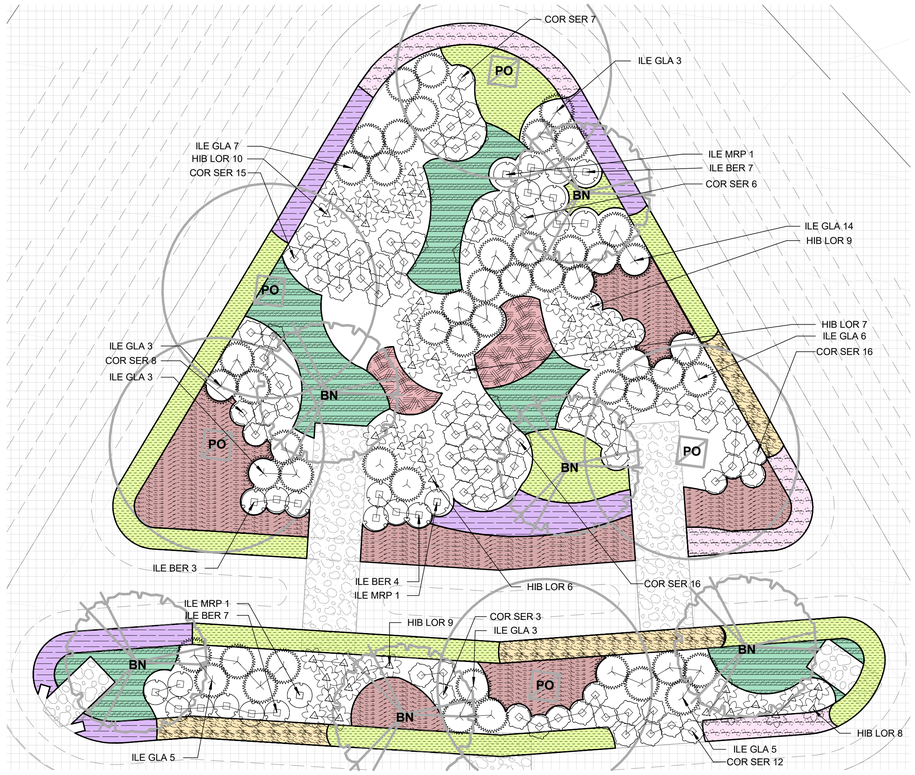

5 L188C LA_SWM-11
1" = 10'-0"

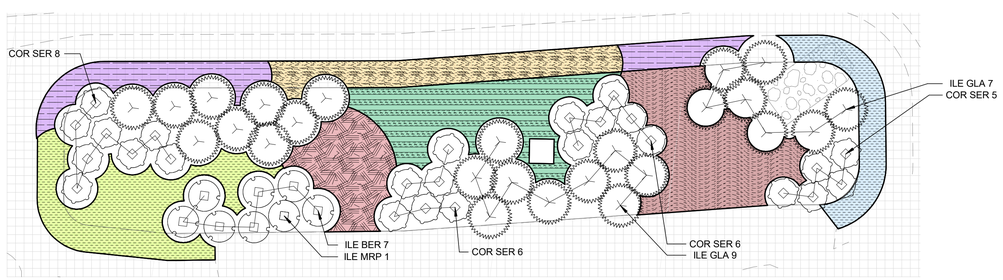

1 L188C LA_SWM-12A
1/8" = 1'-0"

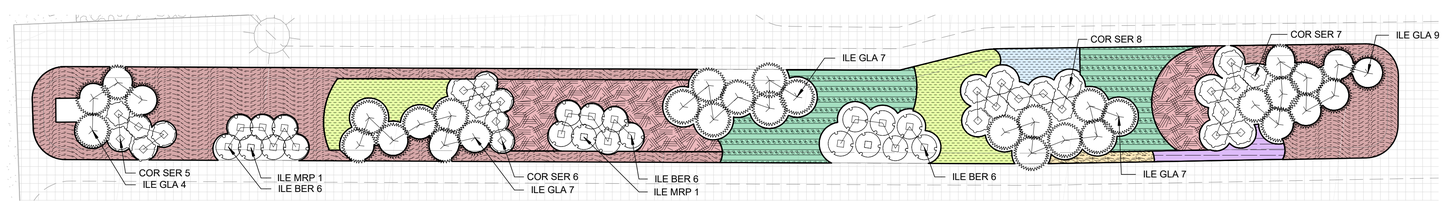

2 L188C LA_SWM-12B
1" = 10'-0"

SWM LEGEND - PLANTING		
Plant Code	Botanical Name	Common Name
Evergreen Trees		
MJ	Magnolia virginiana `Jim Wilson`	Moonglow® Sweetbay Magnolia
Trees		
BN	Betula nigra `Duraheat`	Duraheat River Birch
NS	Nyssa sylvatica	Black Gum
PO	Platanus occidentalis	American Sycamore
Shrub		
COR KLS	Cornus sericea `Kelseyi`	Kelsey`s Dwarf Red Twig Dogwood
COR SER	Cornus sericea `Farrow`	Arctic Fire® Red Twig Dogwood
FOT AIR	Fothergilla gardenii `Mt. Airy`	Mt. Airy Dwarf Witchalder
HIB LOR	Hibiscus moscheutos `Lord Baltimore`	Lord Baltimore Rose Mallow
ILE BER	Ilex verticillata `Berry Poppins`	Winterberry
ILE GLA	Ilex glabra	Inkberry Holly
ILE MRP	Ilex verticillata `Mr. Poppins`	Winterberry
ILE SHA	Ilex glabra `Shamrock`	Shamrock Inkberry Holly
KAL ELF	Kalmia latifolia `Elf`	Elf Dwarf Mountain Laurel
PRU OTT	Prunus laurocerasus `Otto Luyken`	Otto Luyken English Laurel
SPI SPI	Spiraea japonica `Little Princess`	Little Princess Japanese Spirea
VIB DEN	Viburnum dentatum `Arrowwood`	Arrowwood Viburnum
VIB LIT	Viburnum dentatum `KLMseventeen`	Little Joe™ Arrowwood Viburnum
Ferns		
DRY BRI	Dryopteris erythrosora `Brilliance`	Brilliance Autumn Fern
Grasses		
AND VIR	Andropogon virginicus	Broomsedge Bluestem
CAR PYL	Carex pensylvanica	Pennsylvania Sedge
PAN NOR	Panicum virgatum `Northwind`	Northwind Switch Grass
PAN SHD	Panicum virgatum `Shenandoah`	Shenandoah Switch Grass
Perennials		
AMS HUB	Amsonia hubrichtii	Arkansas Bluestar
BAP PUR	Baptisia x `Purple Smoke`	Purple Smoke Wild Indigo
ECH POW	Echinacea x `Pow Wow`	Pow Wow Coneflower
EUP GAT	Eupatoriadelphus maculatus `Gateway`	Gateway Joe Pye Weed
EUP LIT	Eupatoriadelphus dubium `Little Joe`	Little Joe Pye Weed
RUD FU2	Rudbeckia hirta fulgida	Black-eyed Susan

PROJECT NAME
MERITUS GRAD HOUSING

PROJECT ADDRESS
1500 MT AETNA RD, HAGERSTOWN, MD 21742

DC Project No. 23-P-0088

Owner Project No.

OWNER / DEVELOPER
MERITUS/ RADNOR

PROJECT SUBMISSION
PERMIT SUBMISSION

REVISION#	ISSUED FOR	DATE
	SITE PLAN	09/01/2023
	50% CD	10/16/2023
	PERMIT SUBMISSION	12/11/2023

Design Collective
ARCHITECTURE · PLANNING · INTERIORS
LANDSCAPE ARCHITECTURE · GRAPHICS
903 East Pratt Street, 5th Floor
Baltimore, MD 21202
P 410 685 6655 www.designcollective.com

©DESIGN COLLECTIVE,INC. ALL RIGHTS RESERVED

CONSULTANT

KEY PLAN

SEAL

AFFIRMATION

SHEET TITLE
PLANTING PLAN - SWM 11, 12

SCALE
As indicated

SHEET NUMBER
L188C

12/11/2023 5:34:53 PM

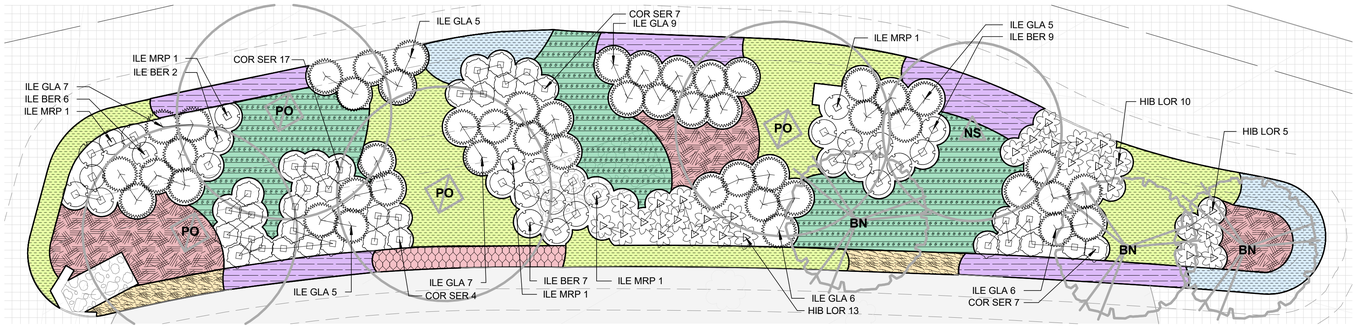

1 L188D LA_SWM-13
1" = 10'-0"

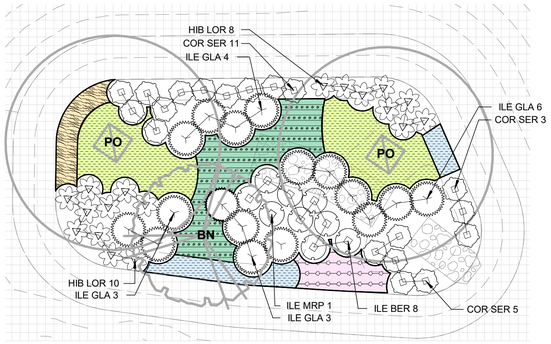

2 L188D LA_SWM-4
1" = 10'-0"

SWM LEGEND - PLANTING		
Plant Code	Botanical Name	Common Name
Evergreen Trees		
MJ	Magnolia virginiana `Jim Wilson`	Moonglow® Sweetbay Magnolia
Trees		
BN	Betula nigra `Duraheat`	Duraheat River Birch
NS	Nyssa sylvatica	Black Gum
PO	Platanus occidentalis	American Sycamore
Shrub		
COR KLS	Cornus sericea `Kelseyi`	Kelsey`s Dwarf Red Twig Dogwood
COR SER	Cornus sericea `Farrow`	Arctic Fire® Red Twig Dogwood
FOT AIR	Fothergilla gardenii `Mt. Airy`	Mt. Airy Dwarf Witchalder
HIB LOR	Hibiscus moscheutos `Lord Baltimore`	Lord Baltimore Rose Mallow
ILE BER	Ilex verticillata `Berry Poppins`	Winterberry
ILE GLA	Ilex glabra	Inkberry Holly
ILE MRP	Ilex verticillata `Mr. Poppins`	Winterberry
ILE SHA	Ilex glabra `Shamrock`	Shamrock Inkberry Holly
KAL ELF	Kalmia latifolia `Elf`	Elf Dwarf Mountain Laurel
PRU OTT	Prunus laurocerasus `Otto Luyken`	Otto Luyken English Laurel
SPI SPI	Spiraea japonica `Little Princess`	Little Princess Japanese Spirea
VIB DEN	Viburnum dentatum `Arrowwood`	Arrowwood Viburnum
VIB LIT	Viburnum dentatum `KLMseventeen`	Little Joe™ Arrowwood Viburnum
Ferns		
DRY BRI	Dryopteris erythrosora `Brilliance`	Brilliance Autumn Fern
Grasses		
AND VIR	Andropogon virginicus	Broomsedge Bluestem
CAR PYL	Carex pensylvanica	Pennsylvania Sedge
PAN NOR	Panicum virgatum `Northwind`	Northwind Switch Grass
PAN SHD	Panicum virgatum `Shenandoah`	Shenandoah Switch Grass
Perennials		
AMS HUB	Amsonia hubrichtii	Arkansas Bluestar
BAP PUR	Baptisia x `Purple Smoke`	Purple Smoke Wild Indigo
ECH POW	Echinacea x `Pow Wow`	Pow Wow Coneflower
EUP GAT	Eupatoriadelphus maculatus `Gateway`	Gateway Joe Pye Weed
EUP LIT	Eupatoriadelphus dubium `Little Joe`	Little Joe Pye Weed
RUD FU2	Rudbeckia hirta fulgida	Black-eyed Susan

PROJECT NAME
MERITUS GRAD HOUSING

PROJECT ADDRESS
1500 MT AETNA RD, HAGERSTOWN, MD 21742

DC Project No. 23-P-0088

Owner Project No.

OWNER / DEVELOPER
MERITUS/ RADNOR

PROJECT SUBMISSION
PERMIT SUBMISSION

REVISION#	ISSUED FOR	DATE
	SITE PLAN	09/01/2023
	50% CD	10/16/2023
	PERMIT SUBMISSION	12/11/2023

Design Collective
ARCHITECTURE PLANNING INTERIORS
LANDSCAPE ARCHITECTURE GRAPHICS
100 East Pratt Street, 18th Floor
Baltimore, Maryland 21202
P 410 685 6655 | www.designcollective.com

©DESIGN COLLECTIVE,INC. ALL RIGHTS RESERVED

CONSULTANT

KEY PLAN

SEAL

AFFIRMATION

SHEET TITLE
PLANTING PLAN - SWM 4, 13

SCALE
1" = 10'-0"

SHEET NUMBER
L188D

SP-23-034

12/11/2023 5:35:00 PM

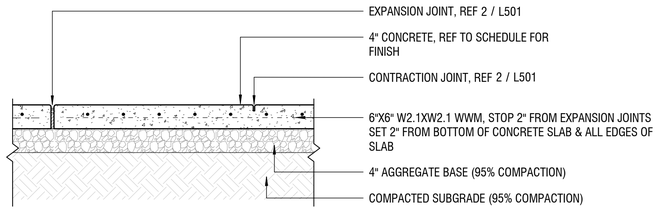

1 / L501 CIP CONC. PAVING (PED)
1" = 1'-0"

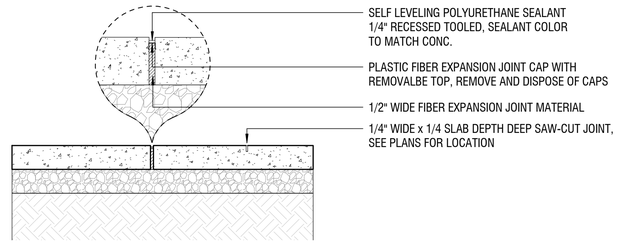

2 / L501 CONCRETE JOINTS
1" = 1'-0"

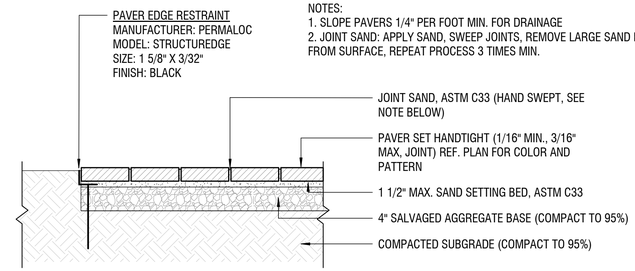

NOTES:
1. SLOPE PAVERS 1/4" PER FOOT MIN. FOR DRAINAGE
2. JOINT SAND: APPLY SAND, SWEEP JOINTS, REMOVE LARGE SAND PARTICLES FROM SURFACE, REPEAT PROCESS 3 TIMES MIN.

3 / L501 UNIT PAVER ON GRADE - SAND SETTING
1" = 1'-0"

NOTES:
1. REF 2 / L501 FOR JOINTS
2. PROVIDE EXPANSION JOINT @ ALL VERTICAL ELEMENTS, CURBS AND CHANGE IN CONCRETE PAVING

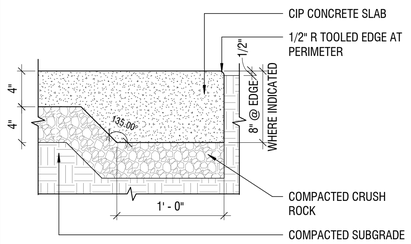

4 / L501 THICKENED SLAB
1 1/2" = 1'-0"

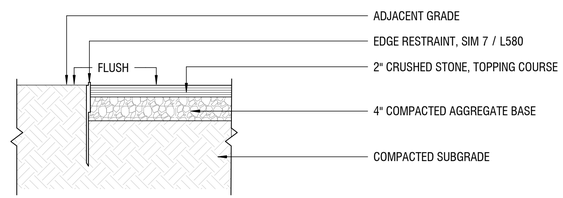

5 / L501 CRUSHED ROCK
1" = 1'-0"

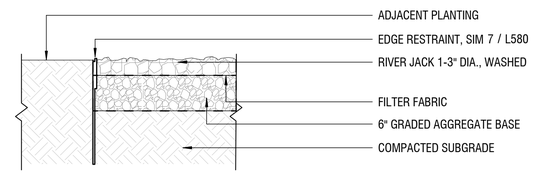

6 / L501 DECORATIVE STONE
1" = 1'-0"

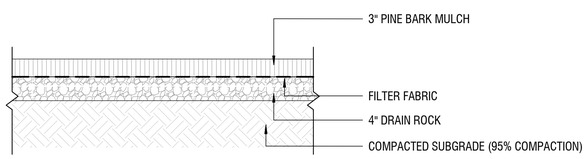

7 / L501 PET AREA MULCH
1" = 1'-0"

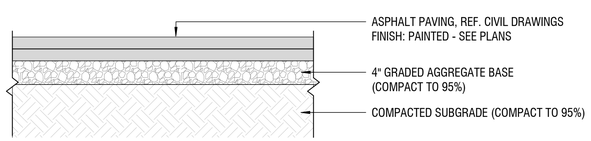

8 / L501 ASPHALT SPORTCOURT
1" = 1'-0"

NOTE:
* SLOPE PAVERS 1/4" PER FOOT MIN. FOR DRAINAGE
* JOINT SAND: APPLY SAND, SWEEP JOINTS, REMOVE LARGE SAND PARTICLES FROM SURFACE, REPEATE PROCESS 4 TIMES MIN.
* F'C = 4000 PSI

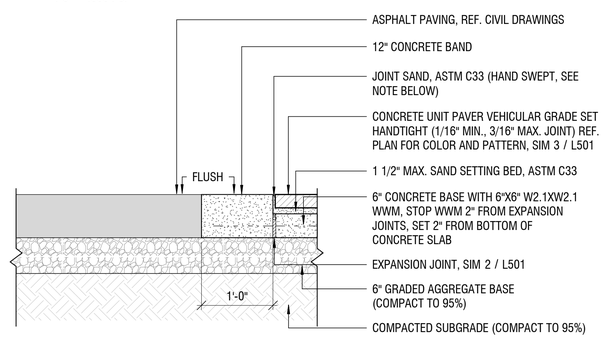

9 / L501 PAVER/CONCRETE BAND (VEHICULAR)
1" = 1'-0"

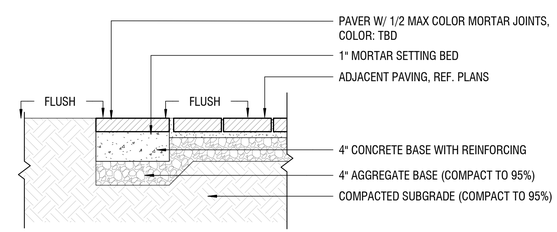

10 / L501 ACCENT BORDER
1" = 1'-0"

PROJECT NAME
MERITUS GRAD HOUSING

PROJECT ADDRESS
1500 MT AETNA RD, HAGERSTOWN, MD 21742

DC Project No. 23-P-0088

Owner Project No.

OWNER / DEVELOPER
MERITUS/ RADNOR

PROJECT SUBMISSION

PERMIT SUBMISSION

REVISION#	ISSUED FOR	DATE
	DESIGN DEVELOPMENT	07/28/2023
	SITE PLAN	09/01/2023
	50% CD	10/16/2023
	PERMIT SUBMISSION	12/11/2023

Design Collective
ARCHITECTURE | PLANNING | INTERIORS
LANDSCAPE ARCHITECTURE | GRAPHICS
10 East First Street, 5th Floor
Boston, Massachusetts 02127
P 410 685 6055 www.designcollective.com

© DESIGN COLLECTIVE, INC. ALL RIGHTS RESERVED

CONSULTANT

KEY PLAN

SEAL

AFFIRMATION

SHEET TITLE
PAVING DETAILS

SCALE
As indicated

SHEET NUMBER
L501

12/11/2023 5:35:02 PM

NOTE:
1. HANDRAIL TO BE MOUNTED 1 1/2" CLEAR OF CHEEK WALL.
2. EXPANSION JOINT TO BE LOCATED BETWEEN STAIRS AND CHEEKWALLS. REF. 2 / L501
3. SEE PLANS FOR ADDITIONAL STAIR/HANDRAIL INFORMATION.
4. ON VANISHING STAIRS, THE LEADING EDGE SHALL HAVE A DISTINCTIVE STRIPE WITH A SLIP RESISTANT SURFACE VISIBLE IN DESCENT OF STAIR.

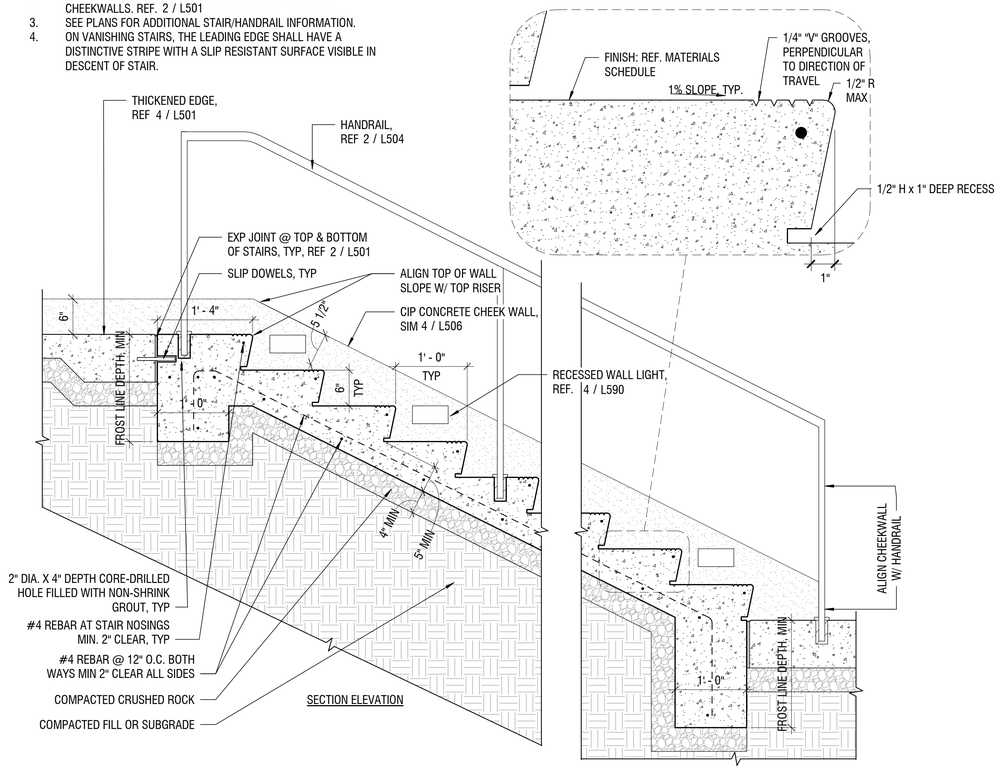

1 L504 CONCRETE STAIR
1" = 1'-0"

NOTES:
1. ALL JOINTS TO BE CONTINUOUS WELDS. GRIND SMOOTH PRIOR TO FINISHING.
2. METAL FINISH: POWDERCOAT (COLOR: BLACK)
3. CONTRACTOR TO PROVIDE HANDRAIL SHOP DRAWINGS TO LANDSCAPE ARCHITECT FOR REVIEW.

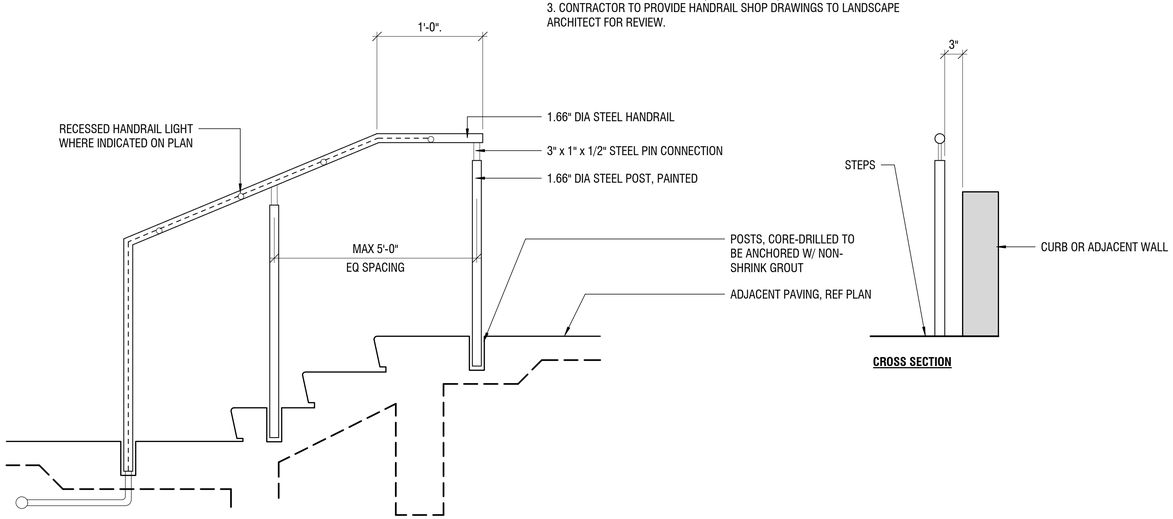

2 L504 STAIR HAND RAIL
1" = 1'-0"

PROJECT NAME
MERITUS GRAD HOUSING

PROJECT ADDRESS
1500 MT AETNA RD, HAGERSTOWN, MD 21742

DC Project No. 23-P-0088

Owner Project No.

OWNER / DEVELOPER
MERITUS/ RADNOR

PROJECT SUBMISSION
PERMIT SUBMISSION

REVISION#	ISSUED FOR	DATE
	DESIGN DEVELOPMENT	07/28/2023
	SITE PLAN	09/01/2023
	50% CD	10/16/2023
	PERMIT SUBMISSION	12/11/2023

Design Collective
ARCHITECTURE PLANNING INTERIORS
LANDSCAPE ARCHITECTURE GRAPHICS
100 East Pratt Street, 18th Floor
Baltimore, Maryland 21202
P 410 685 6655 | www.designcollective.com

©DESIGN COLLECTIVE, INC. ALL RIGHTS RESERVED

CONSULTANT

KEY PLAN

SEAL

AFFIRMATION

SHEET TITLE
STAIR DETAILS

SCALE
1" = 1'-0"

SHEET NUMBER
L504

SP-23-034

12/11/2023 5:35:03 PM

NOTES:
1. RISERS TO HAVE UNIFORM HEIGHTS AND DEPTHS. RISER HEIGHTS TO BE 4" MIN-6" MAX. TREADS TO BE 1'-7" DEEP.
2. HANDRAIL ONLY NECESSARY ON STAIR WITH 3 OR MORE RISERS
3. ALL CONCRETE TO BE 5000 PSI MIN. AIR ENTRAINED
4. REF 2 / L505 FOR TYPICAL TREAD LAYOUT
5. EXPANSION JOINT ADJACENT TO WALLS, TYP. SEALANT TO MATCH MORTAR COLOR

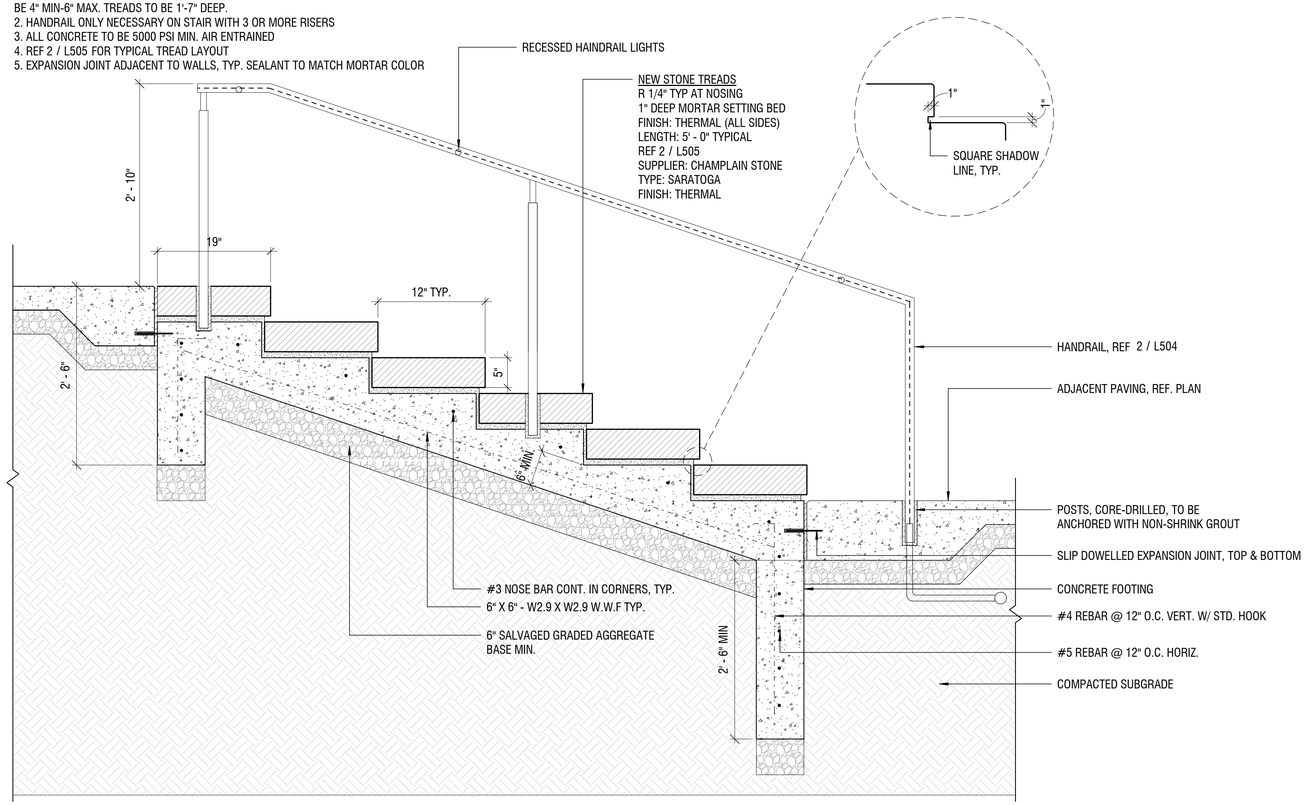

1 / L505 STONE STAIRS
1" = 1'-0"

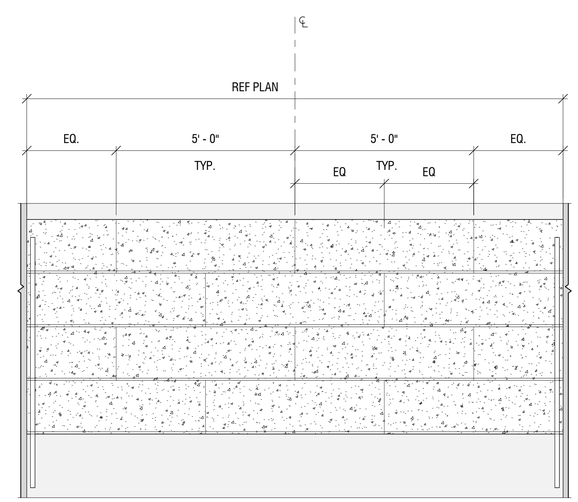

PARTIAL PLAN

2 / L505 STONE STAIRS - TYPICAL LAYOUT
1/2" = 1'-0"

PROJECT NAME
MERITUS GRAD HOUSING

PROJECT ADDRESS
1500 MT AETNA RD, HAGERSTOWN, MD 21742

DC Project No. 23-P-0088

Owner Project No.

OWNER / DEVELOPER
MERITUS/ RADNOR

PROJECT SUBMISSION

PERMIT SUBMISSION

REVISION#	ISSUED FOR	DATE
	DESIGN DEVELOPMENT	07/28/2023
	50% CD	10/16/2023
	PERMIT SUBMISSION	12/11/2023

Design Collective
ARCHITECTURE · PLANNING · INTERIORS
LANDSCAPE ARCHITECTURE · GRAPHICS
903 East Pine Street, 19th Floor
Bellevue Hill, Seattle, WA 98122
P 425 685 6655 | www.designcollective.com

©DESIGN COLLECTIVE,INC. ALL RIGHTS RESERVED

CONSULTANT

KEY PLAN

SEAL

AFFIRMATION

SHEET TITLE
STAIR DETAILS

SCALE
As indicated

SHEET NUMBER
L505

12/11/2023 5:35:09 PM

NOTES:
1. INSTALLATION INCLUDES REMOVAL OF STAKES ONE YEAR AFTER INSTALLATION
2. SHAPE SOIL SURFACE TO PROVIDE DIAMETER WATERING RING
3. SIDES OF PLANTING HOLE TO BE ANGLED OUTWARD AT 45-DEGRESS AND HAND SCARIFIED.

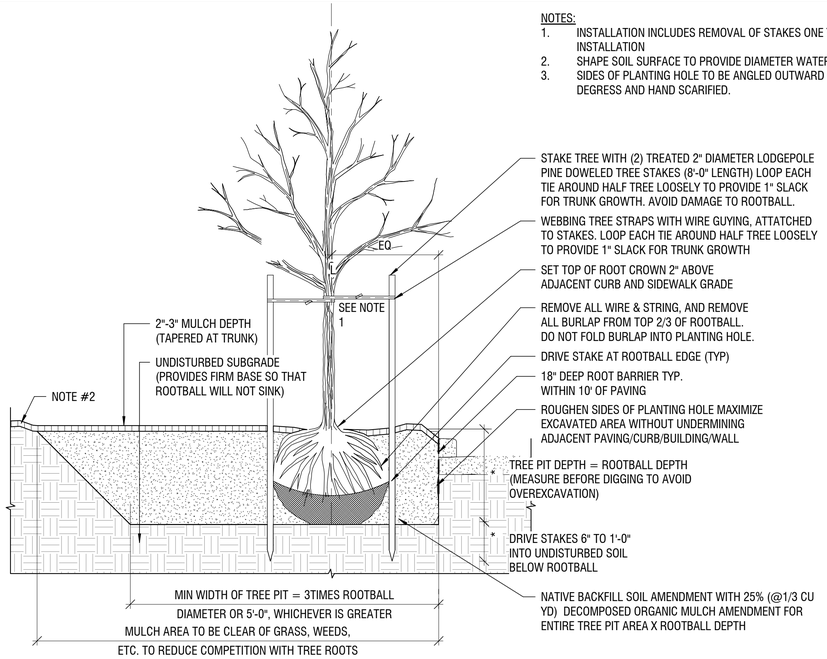

1 L580 DECIDUOUS TREE PLANTING
1/2" = 1'-0"

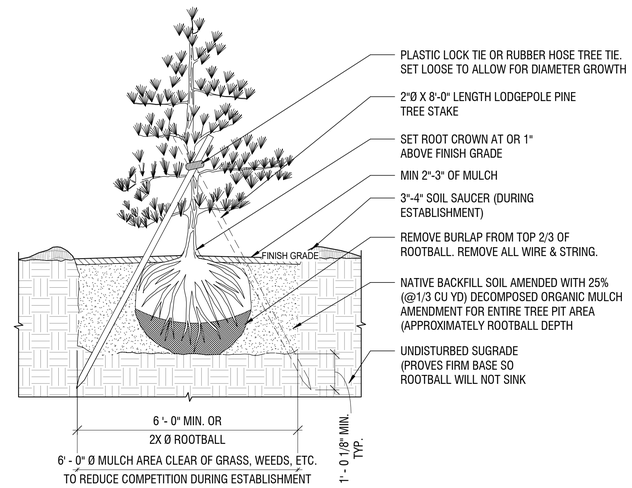

2 L580 CONIFEROUS TREE PLANTING
1/2" = 1'-0"

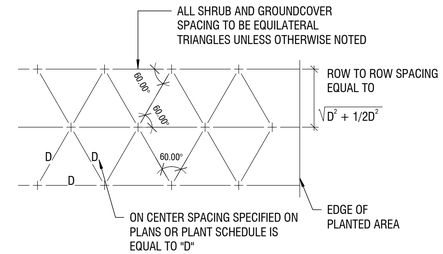

6 L580 TRIANGULAR PLANT SPACING
1/4" = 1'-0"

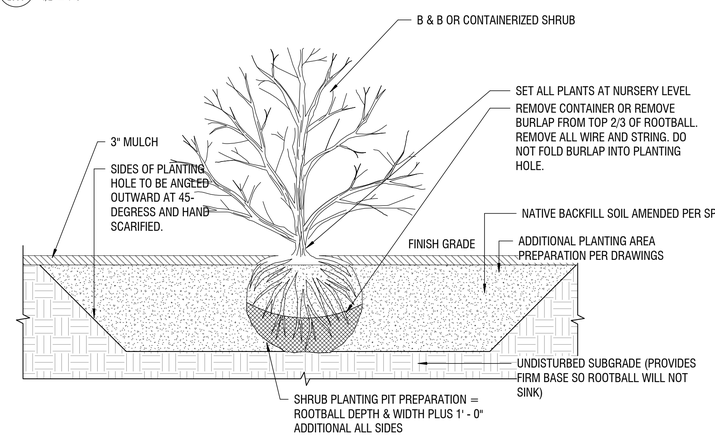

3 L580 SHRUB PLANTING
1" = 1'-0"

NOTES:
1. NO GUYING OR STAKING IN BUFFER MITIGATION ENHANCEMENT AREAS
2. ONE STAKE PER TREE ON WINDWARD SIDE; SECOND STAKE ON LEEWARD SIDE
3. SLOPES STEEPER THAN 2:1 MAY REQUIRE AN APPROVED EMBANKMENT STAILIZATION SYSTEM TO CREATE A LEVEL TREE PIT SUCH AS: ROCK FACING; PRECAST CONCRETE WALL UNITS; TIMBER WALL; MANUFACTURED SLOPE RETENTION UNITS
4. WEBBING TREE STRAPS WITH WIRE GUYING, ATTATCHED TO STAKES. LOOP EACH TIE AROUND HALF TREE LOOSELY TO PROVIDE 1" SLACK FOR TRUNK GROWTH.
5. SHAPE SOIL TO PROVIDE 3' - 0"Ø OR ROOTBALL DIAMETER, WHICHEVER IS GREATER, WATERING RING
6. REMOVE ALL STRING. REMOVE TOP 2/3 OF BURLAP. DO NOT FOLD BURLAP INTO PLANTING HOLE.
7. SIDES OF PLANTING HOLE TO BE ANGLED OUTWARD AT 45-DEGRESS AND HAND SCARIFIED.

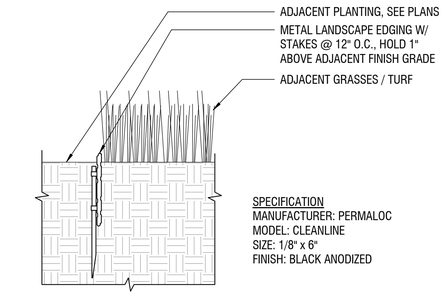

SPECIFICATION
MANUFACTURER: PERMALOC
MODEL: CLEANLINE
SIZE: 1/8" x 6"
FINISH: BLACK ANODIZED

7 L580 LANDSCAPE EDGING
1 1/2" = 1'-0"

NOTES:
1. PROVIDE NATIVE SOIL REPORT & AMEND AS NEEDED TO MEET UMD STDS.

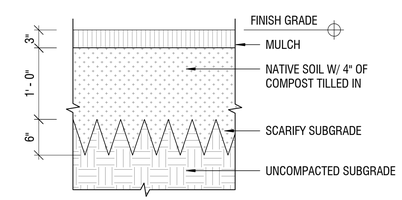

8 L580 SOIL PROFILE @ PLANTING
1" = 1'-0"

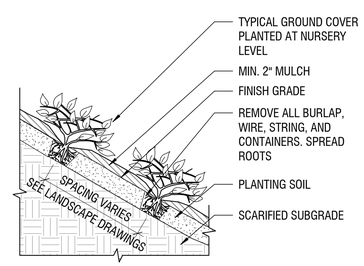

4 L580 GROUNDCOVER PLANTING
3/4" = 1'-0"

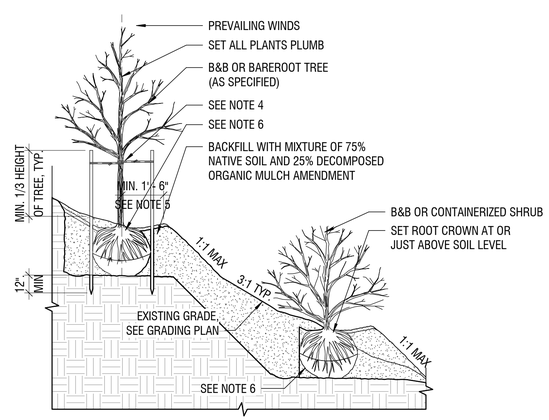

5 L580 SLOPED PLANTING
1/4" = 1'-0"

NOTES:
1. PROVIDE NATIVE SOIL REPORT & AMEND AS NEEDED TO MEET UMD STDS.

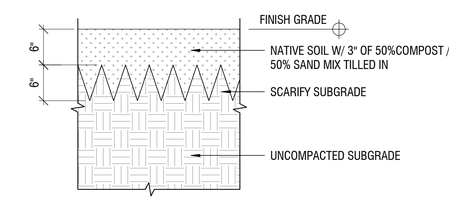

9 L580 SOIL PROFILE @ TURF
1" = 1'-0"

PROJECT NAME
MERITUS GRAD HOUSING

PROJECT ADDRESS
1500 MT AETNA RD, HAGERSTOWN, MD 21742

DC Project No. 23-P-0088
Owner Project No.

OWNER / DEVELOPER
MERITUS/ RADNOR

PROJECT SUBMISSION
PERMIT SUBMISSION

REVISION#	ISSUED FOR	DATE
	SCHEMATIC DESIGN	06/02/2023
	DESIGN DEVELOPMENT	07/28/2023
	SITE PLAN	09/01/2023
	50% CD	10/16/2023
	PERMIT SUBMISSION	12/11/2023

Design Collective
ARCHITECTURE PLANNING INTERIORS LANDSCAPE ARCHITECTURE GRAPHICS
10 Dorsey Drive, 19th Floor
Baltimore, Maryland 21202
P 410 685 6655 www.designcollective.com

©DESIGN COLLECTIVE,INC. ALL RIGHTS RESERVED

CONSULTANT

KEY PLAN

SEAL

AFFIRMATION

SHEET TITLE
PLANTING DETAILS

SCALE
As indicated

SHEET NUMBER
L580

12/11/2023 5:35:11 PM

CRITICAL ROOT ZONE OR OTHER LIMIT OF TREE PROTECTION AREA. SEE TREE PRESERVATION PLAN FOR FENCE ALIGNMENT.

TREE PROTECTION SIGNAGE SHALL READ AS FOLLOWS:

IT IS PROHIBITED TO
ENTER THE TREE
PROTECTION AREA
CALL XXX-XXX-XXXX
TO REPORT
VIOLATION OR FOR
MORE INFORMATION

PROHIBIDO ENTRAR AREA DE
ARBOLES PROTEGIDA
LLAMA AL NUMERO
XXX-XXX-XXXX
PARA REPORTAR
INFRACCIONES O PARA MAS
INFORMACION

NOTES:
1- TREE PROTECTION FENCE SHALL BE INSTALLED PRIOR TO ANY SITE WORK, CLEARING OR DEMOLITION.
2- WHERE REQUIRED, SUPER SILT FENCE MAY BE USED IN LIEU OF WELDED WIRE FOR TREE PROTECTION PROVIDED IT IS INSTALLED AND MAINTAINED AS A TREE PROTECTION MEASURE AND IS POSTED WITH TREE PROTECTION SIGNS.
3- TREE PROTECTION FENCE SHALL BE MAINTAINED THROUGHOUT CONSTRUCTION. REMOVE FENCE ONLY WITH APPROVAL AND AFTER ALL SITE WORK HAS BEEN COMPLETED.
4- SEE SPECIFICATIONS FOR ADDITIONAL TREE PROTECTION REQUIREMENTS.
5- IF THERE IS NO EXISTING IRRIGATION, SEE SPECIFICATIONS FOR WATERING REQUIREMENTS.
6- NO PRUNING SHALL BE PERFORMED EXCEPT BY APPROVED ARBORIST.
7- NO EQUIPMENT SHALL OPERATE INSIDE THE PROTECTIVE FENCING INCLUDING DURING FENCE INSTALLATION AND REMOVAL.
8- IF THERE ARE MAINTENANCE CONCERNS INSIDE THE TREE PROTECTION FENCE, EX. MOWING LAWN, PLACE 4 INCHES OF MULCH INSIDE FENCE .ALL MULCH SHALL BE UNTREATED, NON-DYED HARDWOOD MULCH.
8- SEE SITE PREPARATION PLAN FOR ANY MODIFICATIONS WITH THE TREE PROTECTION AREA.

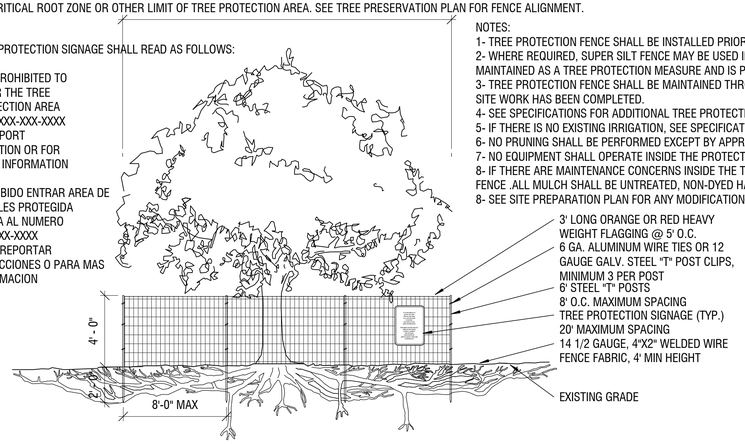

1 L581 TREE PROTECTION - BORING UNDER CROWN DRIPLINE
1/4" = 1'-0"

CRITICAL ROOT ZONE OR OTHER LIMIT OF TREE PROTECTION AREA. SEE TREE PRESERVATION PLAN FOR FENCE ALIGNMENT.

NOTES:
1- SEE PLANS FOR PROTECTION AREA.
2- EXACT LOCATION OF TREE PROTECTION FENCE SHALL BE STAKED OR FLAGGED PRIOR TO TRENCHING.
3- ONLY CONSTRUCT A ROOT PRUNING TRENCH WHERE NECESSARY FOR CONSTRUCTION PURPOSES.
4- TRENCH SHOULD BE BACKFILLED IMMEDIATELY OR INCORPORATED WITH SILT FENCE INSTALLATION. COORDINATE LAYOUT WITH EROSION AND SEDIMENT CONTROL PLAN.
5- ROOTS SHOULD BE SEVERED BY TRENCHER, VIBRATORY PLOW, OR APPROVED EQUIVALENT. ROOTS OVER 1.5" DIAMETER SHOULD BE CLEANLY CUT BY HAND. ROOT PRUNING ADJACENT TO TREES 30" OR LARGER IN DIAMETER WILL REQUIRE SOIL REMOVAL BY SUPERSONIC AIR TOOL TO MINIMIZE TREE DAMAGE.
6- ROOT PRUNING TO OCCUR DURING DORMANT SEASON IN THE EARLY SPRING.

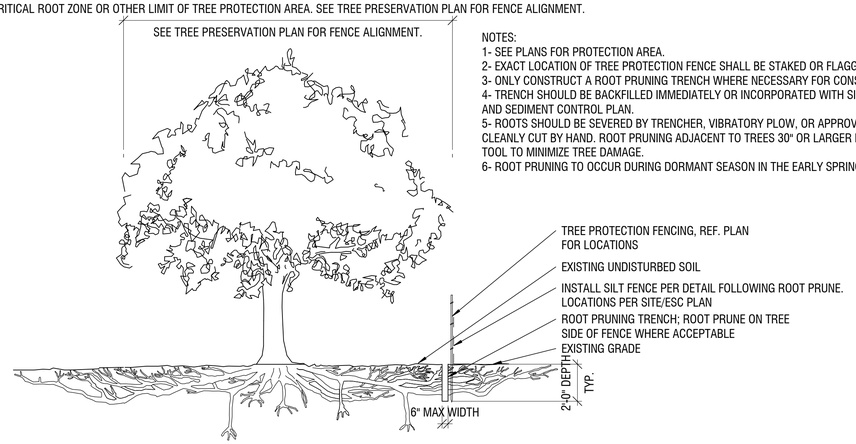

2 L581 ROOT PRUNING DETAIL
1/4" = 1'-0"

NOTES:
1- SEE PLANS FOR PROTECTION AREAS.
2- EXACT LOCATION OF TREE TRUNK PROTECTION BOARDS IS IDENTIFIED ON PLANS.
3- THE HEIGHT OF THE WOOD PLANKS SHALL BE 4 FEET MINIMUM, OR MATCH THE HEIGHT OF VEHICLE CLEARANCE, WHICHEVER IS GREATER.
4- DO NOT DRIVE FASTENERS INTO THE TREE.
5- BOARDS AND ROPES TO BE ADJUSTED EVERY THREE MONTHS TO ALLOW FOR GROWTH. TO BE COMPLETED BY PROJECT ARBORIST.
5- BOARDS SHALL SIT ABOVE THE ROOT FLARE AND BURLAP TO EXTEND BELOW AND ABOVE BOARDS.

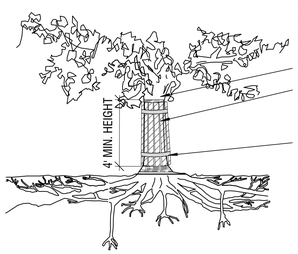

4 L581 TRUNK PROTECTION DETAIL
1/4" = 1'-0"

CRITICAL ROOT ZONE OR OTHER LIMIT OF TREE PROTECTION AREA. SEE TREE PRESERVATION PLAN FOR FENCE ALIGNMENT.

NOTES:
1- SEE SPECIFICATIONS FOR ADDITIONAL TREE PROTECTION REQUIREMENTS.
2- IF THERE IS NO EXISTING IRRIGATION, SEE SPECIFICATIONS FOR WATERING REQUIREMENTS.
3- NO PRUNING SHALL BE PERFORMED EXCEPT BY APPROVED ARBORIST.
4- NO EQUIPMENT SHALL OPERATE INSIDE THE PROTECTIVE FENCING INCLUDING DURING FENCE INSTALLATION AND REMOVAL.
5- A COMBINATION OF TREE ROOT PROTECTION MATTING AND MULCH MAY BE USED, SUBMIT ALL PRODUCT INFORMATION AND MODIFIED DETAIL TO LANDSCAPE ARCHITECT AND ARBORIST FOR APPROVAL.
6- ALL MULCH SHALL BE UNTREATED, NON-DYED HARDWOOD MULCH.

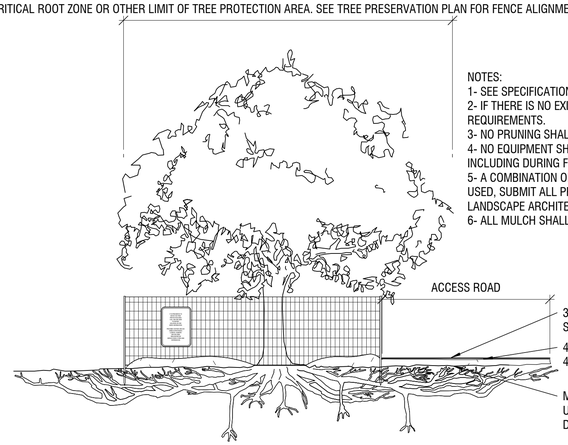

3 L581 TREE PROTECTION - ACCESS ROAD
1/4" = 1'-0"

NOTE:
CABLE ANCHORING SYSTEM TYPICAL FOR ALL TREES AT GREEN ROOF. PROVIDE THREE ANCHORING POINTS FOR EACH TREE (DEADMEN MAY BE SHARED BETWEEN ADJACENT TREES). ANCHORING POINTS SHALL BE EQUALLY SPACED AND ANCHORING CABLES SHALL BE OF EQUAL LENGTH. FASTEN ANCHOR CABLES TO CONCRETE DEADMAN WITH GUYING CABLE. STEEL BRAIDED CABLE 'LOOP' AT ROOTBALL SURFACE 12" MIN FROM TRUNK. REFERENCE PLANTING PLAN FOR TREE LOCATIONS.

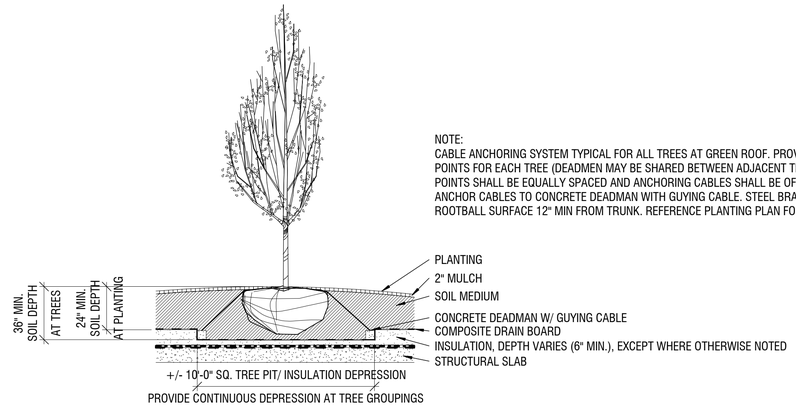

5 L581 TREE IN PLANTING AREA - ON STRUCTURE
1/4" = 1'-0"

PROJECT NAME
MERITUS GRAD HOUSING

PROJECT ADDRESS
1500 MT AETNA RD, HAGERSTOWN, MD 21742

DC Project No. 23-P-0088

Owner Project No.

OWNER / DEVELOPER
MERITUS/ RADNOR

PROJECT SUBMISSION
PERMIT SUBMISSION

REVISION#	ISSUED FOR	DATE
	PERMIT SUBMISSION	12/11/2023

Design Collective
ARCHITECTURE · PLANNING · INTERIORS
LANDSCAPE ARCHITECTURE · GRAPHICS
100 East First Street, 5th Floor
Boston, Massachusetts 02127
P 410 685 6655 www.designcollective.com

©DESIGN COLLECTIVE,INC. ALL RIGHTS RESERVED

CONSULTANT

KEY PLAN

SEAL

AFFIRMATION

SHEET TITLE
TREE PROTECTION DETAILS

SCALE
1/4" = 1'-0"

SHEET NUMBER
L581

SP-23-034

12/11/2023 5:35:15 PM

SITE PLAN SUBMISSION - PLANTING SCHEDULE

Count	Plant Code	Botanical Name	Common Name	Cont	Cal	Size	Remarks
Trees							
10	AO	Acer rubrum `October Glory`	October Glory Red Maple	B & B	3"Cal		Specimen; matched; full & symmetrical canopy
40	NS	Nyssa sylvatica	Black Gum	B & B	3"Cal		Specimen; matched; full & symmetrical canopy
48	PO	Platanus occidentalis	American Sycamore	B & B	3"Cal		Specimen; matched; full & symmetrical canopy
17	QC	Quercus coccinea	Scarlet Oak	B & B	3"Cal		Specimen; matched; full & symmetrical canopy
4	QP	Quercus phellos	Willow Oak	B & B	3"Cal		
14	UP	Ulmus americana `Princeton`	Princeton American Elm	B & B	3"Cal		Specimen; matched; full & symmetrical canopy
133							

PROJECT NAME
MERITUS GRAD HOUSING

PROJECT ADDRESS
1500 MT AETNA RD, HAGERSTOWN, MD 21742

DC Project No. 23-P-0088

Owner Project No.

OWNER / DEVELOPER
MERITUS/ RADNOR

PROJECT SUBMISSION

PERMIT SUBMISSION

REVISION#	ISSUED FOR	DATE
	SITE PLAN	09/01/2023
	50% CD	10/16/2023
	PERMIT SUBMISSION	12/11/2023

Design Collective
ARCHITECTURE PLANNING INTERIORS
LANDSCAPE ARCHITECTURE GRAPHICS
100 East Pratt Street, 18th Floor
Baltimore, Maryland 21202
P 410 685 6655 | www.designcollective.com

©DESIGN COLLECTIVE, INC. ALL RIGHTS RESERVED

CONSULTANT

KEY PLAN

SEAL

AFFIRMATION

SHEET TITLE
SITE PLAN PLANT SCHEDULE

SCALE

SHEET NUMBER
L680

Plan Review Projects Initialized - December 01, 2023 - December 31, 2023

Land Development Reviews							
Record #	**Type**	**Status**	**Accepted Date**	**Title**	**Location**	**Consultant**	**Owner**
FP-23-005	Forest Conservation Plan	Received	22-Dec-23	MERITUS SCHOOL OF OSTEOPATHIC MEDICINE GRADUATE STUDENT HOUSING	1311 YALE DRIVE HAGERSTOWN, MD 21742	HRG	Board of Education of Washington County
FS-23-032	Forest Stand Delineation	Approved	11-Dec-23	SIMPLIFIED FOREST STAND DELINEATION PLAN FOR WILLIAM BALL	17421 SNYDERS LANDING ROAD SHARPSBURG, MD 21782	APEX LAND SOLUTIONS LLC	SEXTON JOHN LEE III SEXTON LUANNE H
FS-23-033	Forest Stand Delineation	Approved	15-Dec-23	MCKEE PROPERTY	14455 WELLER ROAD HANCOCK, MD 21750	FOX & ASSOCIATES INC	Austin Douglas McKee III & Debra F McKee
SIM23-066	IMA	Active	19-Dec-23	17119 STERLING ROAD WI	17119 STERLING ROAD WILLIAMSPORT, MD 21795	UNGER SURVEYING & CONSTRUCTION	CJ'S PROPERTIES LLC
SIM23-067	IMA	Requested	21-Dec-23	4511 COURIE DOON LANE RO	4511 COURIE DOON LANE ROHRERSVILLE, MD 21779	FOX & ASSOCIATES INC	COURIE DOON FARM LLC
OM-23-016	Ordinance Modification	Received	15-Dec-23	FRANKLIN & PAMELA THOMPSON, LOT 1	13329 EDGEMONT ROAD SMITHSBURG, MD 21783	FREDERICK SEIBERT & ASSOCIATES	THOMPSON FRANKLIN E THOMPSON PAM A
OM-23-017	Ordinance Modification	In Review	19-Dec-23	REGIONAL PARK PLAT	20025 MOUNT AETNA ROAD HAGERSTOWN, MD 21742	WASHINGTON CO ENGINEERING	Washington County BOCC
S-23-063	Preliminary-Final Plat	In Review	05-Dec-23	FRANKLIN & PAMELA THOMPSON, LOT 1	13329 EDGEMONT ROAD SMITHSBURG, MD 21783	FREDERICK SEIBERT & ASSOCIATES	THOMPSON FRANKLIN E THOMPSON PAM A
S-23-064	Preliminary-Final Plat	In Review	06-Dec-23	HARSHMAN SUBDIVISION	13114 SALEM CHURCH ROAD HAGERSTOWN, MD 21740	R LEE ROYER & ASSOCIATES	HARSHMAN TERRI L ET AL
S-23-065	Preliminary-Final Plat	Pending	08-Dec-23	WILLIAM BALL	17421 SNYDERS LANDING ROAD SHARPSBURG, MD 21782		WILLIAM BALL SEXTON LUANNE H
S-23-068	Preliminary-Final Plat	In Review	28-Dec-23	MONICA & RUSSELL PEARSON LOTS 1&2	19452 GARRETTS MILL ROAD KNOXVILLE, MD 21758	FREDERICK SEIBERT & ASSOCIATES	Monica & Russell Pearson
SP-13-005.R01	Redline Revision	Approved	21-Dec-23	BROOK LANE-HOSPITAL A WING ADDITION AND RENOVATION	BROOK LANE DRIVE S/S	CUMP / TRIAD ENGINEERING	BROOK LANE HEALTH SERVICES, INC. 13218 BROOK LANE DRIVE
SI-23-012	Simplified Plat	In Review	07-Dec-23	PARCEL 'B', JOHN E. MARTIN AND LOIS MARTIN	22049 OLD FORGE ROAD SMITHSBURG, MD 21783	TRIAD ENGINEERING	MARTIN JOHN E & MARTIN LOIS
SI-23-013	Simplified Plat	In Review	19-Dec-23	BEN & KATHLEEN HOVATTER PARCEL A	13057 WOODMONT ROAD HANCOCK, MD 21750	FREDERICK SEIBERT & ASSOCIATES	HOVATTER KATHLEEN E HOVATTER BENJAMIN T
SP-23-046	Site Plan	In Review	12-Dec-23	SITE PLAN FOR JAMES AND CORINA MILLS	12545 LICKING CREEK ROAD BIG POOL, MD 21711	APEX LAND SOLUTIONS LLC	MILLS JAMES LEE MILLS CORINA SUE
SP-23-047	Site Plan	In Review	12-Dec-23	OLIVER DRIVE RETAIL BLDG	13721 OLIVER DRIVE HAGERSTOWN, MD 21740	FOX & ASSOCIATES INC	GHATTAS ENTERPRISES MAUGANS AVE LTD PARTNERSHIP
SP-23-048	Site Plan	In Review	14-Dec-23	SITE PLAN FOR MAUGANSVILLE AG	15244 FAIRVIEW ROAD CLEAR SPRING, MD 21722	FREDERICK SEIBERT & ASSOCIATES	
SP-23-049	Site Plan	In Review	21-Dec-23	SITE PLAN FOR DR. CICCARELLI	16605 KENDLE ROAD WILLIAMSPORT, MD 21795	FREDERICK SEIBERT & ASSOCIATES	CICCARELLI CHRIS CICCARELLI K JILL
SP-23-050	Site Plan	In Review	29-Dec-23	BILLOTTI FARM BREWERY	23435 RINGGOLD PIKE SMITHSBURG, MD 21783	R LEE ROYER & ASSOCIATES	BILLOTTI SAM IV BILLOTTI CASSANDRA ANN

Plan Review Projects Initialized - December 01, 2023 - December 31, 2023

Land Development Reviews							
Record #	**Type**	**Status**	**Accepted Date**	**Title**	**Location**	**Consultant**	**Owner**
GP-23-020	Site Specific Grading Plan	In Review	04-Dec-23	MIDATLANTIC CROSSROADS - ROAD/ENTRANCE IMPROVEMENTS	10440 DOWNSVILLE PIKE HAGERSTOWN, MD 21740		DRI/TCC DOWNSVILLE I LLC
SGP-23-083	Standard Grading Plan	In Review	06-Dec-23	MICHAEL & GAIL TAYLOR	11835 SAINT PAUL ROAD CLEAR SPRING, MD 21722	FREDERICK SEIBERT & ASSOCIATES	TAYLOR MICHAEL E TAYLOR GAIL Y
SGP-23-084	Standard Grading Plan	Pending	11-Dec-23	OSCAR MARTINEZ - 612 BEAVER CREEK RD	612 BEAVER CREEK ROAD HAGERSTOWN, MD 21740		OSCAR MARTINEZ
SGP-23-085	Standard Grading Plan	In Review	19-Dec-23	RALPH CRAIG LOT 5	13251 STUTZ LANE HAGERSTOWN, MD 21740	APEX LAND SOLUTIONS LLC	CRAIG RALPH DAVID
SGP-23-086	Standard Grading Plan	In Review	20-Dec-23	RANDY AND KAREN DRINNON (SHENANDOAH ESTATES LOT 13)	7612 SHENANDOAH COURT BOONSBORO, MD 21713	TRIAD ENGINEERING	OLIVER JOHN R CO INC
SGP-23-087	Standard Grading Plan	In Review	22-Dec-23	KARL POULIN	20322 TOWNSEND ROAD ROHRERSVILLE, MD 21779	FREDERICK SEIBERT & ASSOCIATES	POULIN KARL POULIN KELLY
SWCP23-027	Stormwater Concept Plan	In Review	18-Dec-23	THE RUN AT ELIZABETHTOWNE	17755 HALFWAY BOULEV HAGERSTOWN, MD 21740		KREYKENBOHM HELEN Z
SSWP23-065	Stormwater Standard Plan	Revisions Required	06-Dec-23	MICHAEL & GAIL TAYLOR	11835 SAINT PAUL ROAD CLEAR SPRING, MD 21722	FREDERICK SEIBERT & ASSOCIATES	TAYLOR MICHAEL E TAYLOR GAIL Y
SSWP23-066	Stormwater Standard Plan	Pending Payment	12-Dec-23	ASHLEY SMITH	13735 EXLINE ROAD HANCOCK, MD 21750		SMITH WILLIAM E JR SMITH ASHLEY L
SSWP23-067	Stormwater Standard Plan	In Review	20-Dec-23	RALPH CRAIG LOT 5	13251 STUTZ LANE HAGERSTOWN, MD 21740	APEX LAND SOLUTIONS LLC	CRAIG RALPH DAVID
S-23-066	Subdivision Replat	In Review	12-Dec-23	REPLAT OF SUBDIVISION OF LOT 3 EZ HOMES LLC	13038 LITTLE ANTIETAM ROAD HAGERSTOWN, MD 21742	R LEE ROYER & ASSOCIATES	EZ Homes LLC
S-23-069	Subdivision Replat	In Review	29-Dec-23	RE-PLAT - LANDS OF DWIGHT EUGENE SOMMERS & ANDREA NOEL SOMMERS	21630 CHEWSVILLE ROAD SMITHSBURG, MD 21783	FOX & ASSOCIATES INC	SOMMERS DWIGHT EUGENE SOMMERS ANDREA NOEL
TIS-23-012	Traffic Impact Study	Pending	18-Dec-23	HAGERS CROSSING NORTH (BOSTETTER)	17601 BROADFORDING ROAD HAGERSTOWN, MD 21740	STREET TRAFFIC STUDIES, LTD	BOSTETTER GROUP LLC THE
GPT-23-099	Type 2 Grading Plan	Approved	08-Dec-23	GAVER MEADOWS LOT 72	5 PATTI LANE HAGERSTOWN, MD 21740	FREDERICK SEIBERT & ASSOCIATES	DAVID C LYLES DEVELOPERS LLC
GPT-23-100	Type 2 Grading Plan	Approved	08-Dec-23	GAVER MEADOWS LOT 81	4 BESSY NAOMI DRIVE HAGERSTOWN, MD 21740	FREDERICK SEIBERT & ASSOCIATES	DAVID C LYLES DEVELOPERS LLC
GPT-23-101	Type 2 Grading Plan	In Review	27-Dec-23	GAVER MEADOWS LOT 75		FREDERICK SEIBERT & ASSOCIATES	DAVID C LYLES DEVELOPERS LLC
GPT-23-102	Type 2 Grading Plan	In Review	27-Dec-23	GAVER MEADOWS LOT 79		FREDERICK SEIBERT & ASSOCIATES	DAVID C LYLES DEVELOPERS LLC
GPT-23-103	Type 2 Grading Plan	In Review	27-Dec-23	GAVER MEADOWS LOT 88	25 BESSY NAOMI DRIVE HAGERSTOWN, MD 21740	FREDERICK SEIBERT & ASSOCIATES	DAVID C LYLES DEVELOPERS LLC

Plan Review Projects Initialized - December 01, 2023 - December 31, 2023

Permits Reviews							
Record #	Type	Status	Accepted Date	Title	Location	Consultant	Owner
2023-06189	Entrance Permit	In Progress	06-Dec-23	STICK BUILT HOME	S-15-009 10823 HERSHEY DRIVE, LOT 567	KENNY GARDNER	DOWNEY RICHMOND LEE
2023-06192	Entrance Permit	In Progress	06-Dec-23	STICK BUILT HOME	S-23-062 11835 SAINT PAUL ROAD, LOTS 1 & 2		TAYLOR MICHAEL E TAYLOR GAIL Y
2023-06343	Entrance Permit	In Progress	13-Dec-23	FARM BUILDING			WATTS JUSTIN SCERATI ROBIN
2023-06373	Entrance Permit	In Progress	15-Dec-23	STICK BUILT HOME	S-19-035 9328 ALLOWAY DRIVE, LOT 760		DRB GROUP MID ATLANTIC LLC
2023-06410	Entrance Permit	In Progress	19-Dec-23	STICK BUILT HOME	S-07-023 7612 SHENANDOAH COURT, LOT 13		OLIVER JOHN R CO INC
2023-06424	Entrance Permit	Approved	19-Dec-23	FOREST HARVEST	25021 LAKE WASTLER DRIVE CASCADE, MD 21719		CASCADE PROPERTIES LLC
2023-06441	Entrance Permit	In Progress	21-Dec-23	STICK BUILT HOME	S-18-035 9375 ALLOWAY DRIVE, LOT 223		WESTFIELDS INVESTMENT LLC
2023-06251	Floodplain Permit	Approved	07-Dec-23	UTILITY	434 EAST MAIN STREET		BRUCETON FARM SERVICE INC
2023-06194	Grading Permit	In Progress	06-Dec-23		S-23-062 11835 SAINT PAUL ROAD, LOTS 1 & 2		TAYLOR MICHAEL E TAYLOR GAIL Y
2023-06225	Grading Permit	In Progress	07-Dec-23	STICK BUILT HOME	S-22-031 4511 COURIE DOON LANE, LOT 4	HURD BUILDERS	COURIE DOON FARM LLC
2023-06280	Grading Permit	Approved	08-Dec-23	GRADING FOR GAVER MEADOWS LOT 72	TWN-19-007 5 PATTI LANE, LOT 72		DAVID C LYLES DEVELOPERS LLC
2023-06283	Grading Permit	In Progress	08-Dec-23	GRADING FOR GAVER MEADOWS LOT 81	TWN-19-007 4 BESSY NAOMI DRIVE, LOT 81		DAVID C LYLES DEVELOPERS LLC
2023-06375	Grading Permit	In Progress	15-Dec-23	WESTFIELDS LOT #760	S-19-035 9328 ALLOWAY DRIVE, LOT 760		DRB GROUP MID ATLANTIC LLC
2023-06392	Grading Permit	In Progress	18-Dec-23	RANDY AND KAREN DRINNON	S-07-023 7612 SHENANDOAH COURT, LOT 13		OLIVER JOHN R CO INC
2023-06443	Grading Permit	In Progress	21-Dec-23	WESTFIELDS LOT #223	S-18-035 9375 ALLOWAY DRIVE, LOT 223		WESTFIELDS INVESTMENT LLC
2023-06481	Grading Permit	In Progress	27-Dec-23	GRADING FOR GAVER MEADOWS LOT 75	TWN-19-007 17 PATTI LANE, LOT 75		DAVID C LYLES DEVELOPERS LLC
2023-06482	Grading Permit	In Progress	27-Dec-23	GAVER MEADOWS LOT 79	TWN-19-007 6 PATTI LANE, LOT 79		DAVID C LYLES DEVELOPERS LLC
2023-06483	Grading Permit	In Progress	27-Dec-23	GRADING FOR GAVER MEADOWS LOT 88	TWN-20-006 25 BESSY NAOMI DRIVE, LOT 88		DAVID C LYLES DEVELOPERS LLC
2023-06494	Grading Permit	In Progress	27-Dec-23	STICK BUILT HOME	S-75-14 20322 TOWNSEND ROAD, LOT 14	OLIVER HOMES INC	POULIN KARL POULIN KELLY
2023-06265	Grading Permit	Review	08-Dec-23	COLUMBIA GAS OF MD	46 S COLONIAL DRIVE		MURRAY WAYSON SR
2023-06266	Grading Permit	Approved	08-Dec-23	COLUMBIA GAS OF MD	16317 MCGREGOR DRIVE		LYNCH JOHN
2023-06120	Grading Permit	Approved	01-Dec-23	RUSTOLEUM FIRELINE EXTENSION	SGP-23-081 16410 INDUSTRIAL LANE		RUST-OLEUM CORP
2023-06262	Grading Permit	Review	08-Dec-23	COLUMBIA GAS OF MD	17631 WE WASHINGTON STREET HAGERSTOWN, MD 21740		HELLERS GAS MARYLAND INC
2023-06264	Grading Permit	Review	08-Dec-23	COLUMBIA GAS OF MD	11317 HOPEWELL ROAD		HORN DAVID L BAKER DIANE J
2023-06366	Non-Residential New Construction Permit	Review	14-Dec-23	COMMERCIAL	SP-23-034 19528 INNOVATION DRIVE, BUILDING 4	MORGAN KELLER INC.	
2023-06112	Utility Permit	Approved	01-Dec-23	COLUMBIA GAS	13525 SPRING HILL DRIVE	COLUMBIA GAS OF MD	ROE SCOTT E JR PORTER KARLEY D
2023-06293	Utility Permit	Approved	11-Dec-23	VERIZON	RICE ROAD AND RESLEY ROAD	VERIZON	MCFADDEN MICHAEL EUGENE
2023-06351	Utility Permit	Approved	13-Dec-23	HENSON BORE	HENSON BOULEVARD, PHOENEX DRIVE, AIR PARK DRIVE		WASH CO COMMISSIONERS
2023-06444	Utility Permit	Approved	21-Dec-23	ANTIETAM BROADBAND	4639 LOCUST GROVE ROAD	ANTIETAM CABLE TELEVISION INC	RICE RICKY

Plan Review Projects Initialized - December 01, 2023 - December 31, 2023

Permits Reviews							
Record #	**Type**	**Status**	**Accepted Date**	**Title**	**Location**	**Consultant**	**Owner**
2023-06452	Utility Permit	Approved	21-Dec-23	COLUMBIA GAS	17231 CLOVERLEAF ROAD	COLUMBIA GAS OF MD	AMMONS ROGER H ET AL AMMONS EDWARD A

Plan Review Projects Initialized - December 01, 2023 - December 31, 2023

	Type	Total
LandDev Total by Group: 37	Forest Conservation Plan	1
	Forest Stand Delineation	2
	IMA	2
	Ordinance Modification	2
	Preliminary-Final Plat	4
	Redline Revision	1
	Simplified Plat	2
	Site Plan	5
	Site Specific Grading Plan	1
	Standard Grading Plan	5
	Stormwater Concept Plan	1
	Stormwater Standard Plan	3
	Subdivision Replat	2
	Traffic Impact Study	1
	Type 2 Grading Plan	5
Permits Total by Group: 30	Entrance Permit	7
	Floodplain Permit	1
	Grading Permit	16
	Non-Residential New Construction Permit	1
	Utility Permit	5
Total		**67**